Introduction of Manufacturing Processes

Manufacturing Means

Manufacture = Manus (hand) + Factus (make)

Made by hand

- Manufacturing is the production of goods through the use of labour, machinery, tools, chemical processing and various other processes.

- Manufacturing is conversion of **Raw materials** into **finished products** through manufacturing engineering or the manufacturing process

Manufacturing conversion process

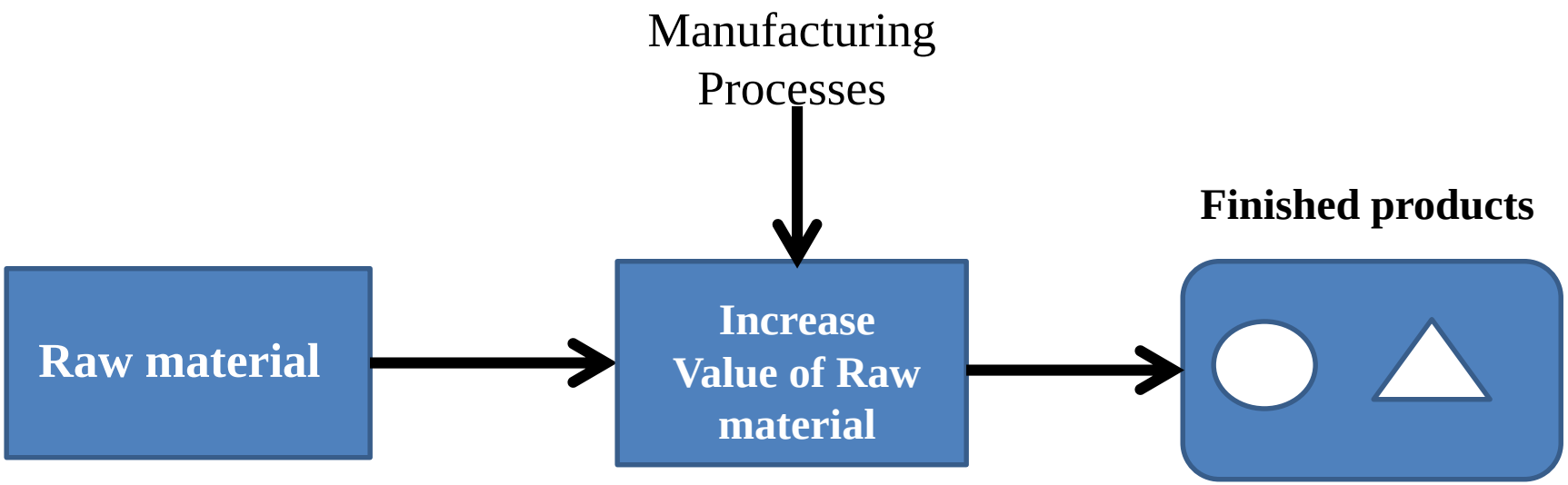

Historical Background

- Bronze age (3500 - 1500 B.C.), extracting copper from ores, casting, hammering.
- Iron age (since 1000 B.C.), heating, quenching
- Industrial Revolution (1770 - 1850), machining like boring, turning, drilling, milling, shaping, Assembly methods

Sector-wise GDP in India:- 2023

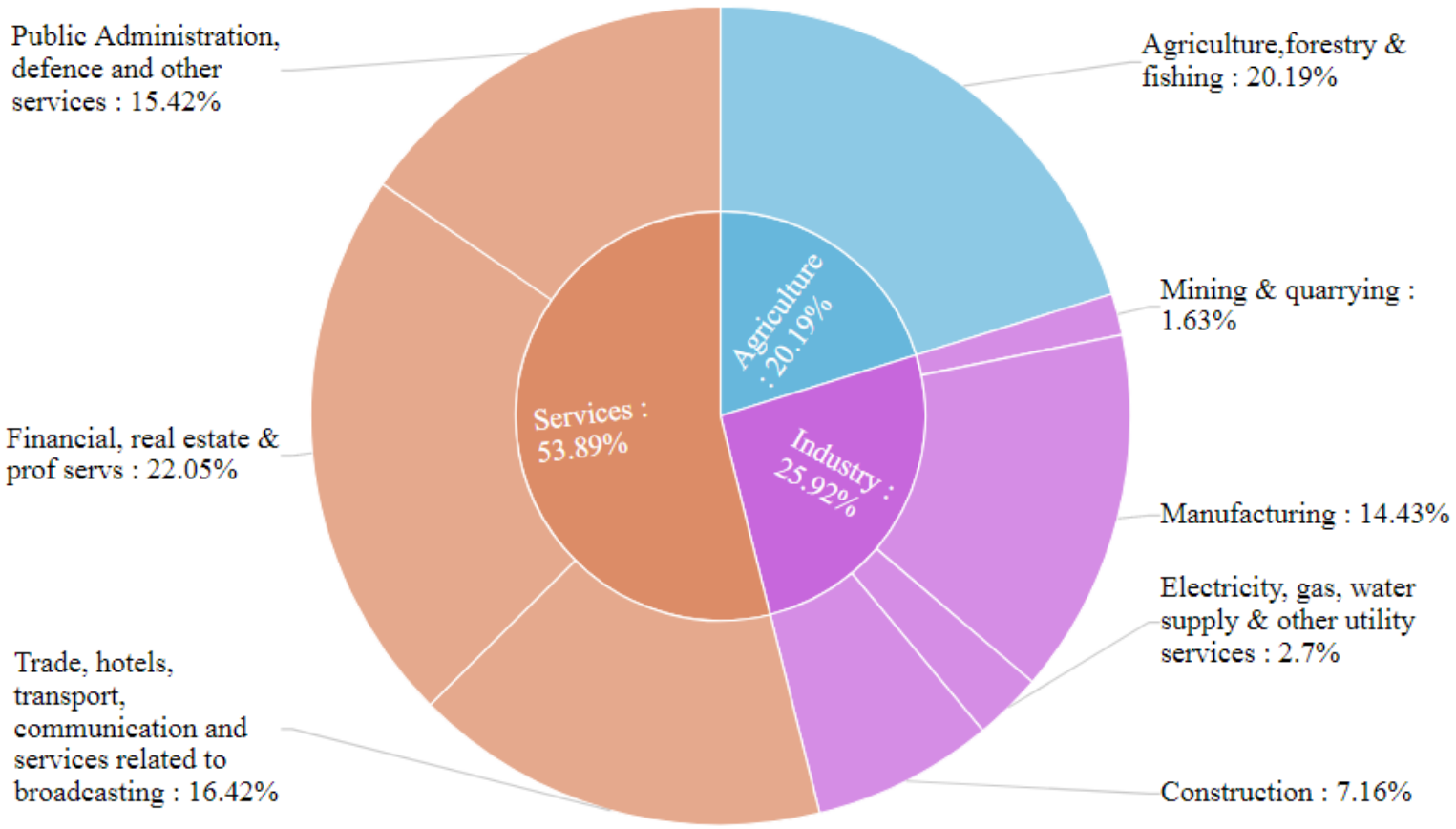

Source: https://statisticstimes.com/economy/country/india-gdp-sectorwise.php

Manufacturing Industries

Primary industries: Natural resources as mining, agriculture, petroleum

Secondary industries: Automotive, computers, electronics

Tertiary industries (service): Education, Banking, tourism,

- Manufactured products

Consumer goods: Cars, TV's, tires, tennis rackets

Capital goods: Buildings, machine tools, machinery

Discrete products: Pumps, smartphones, and aero-planes

Continuous produced products: sheet-metal coils, oil Refining, paper

Manufactured Product Example

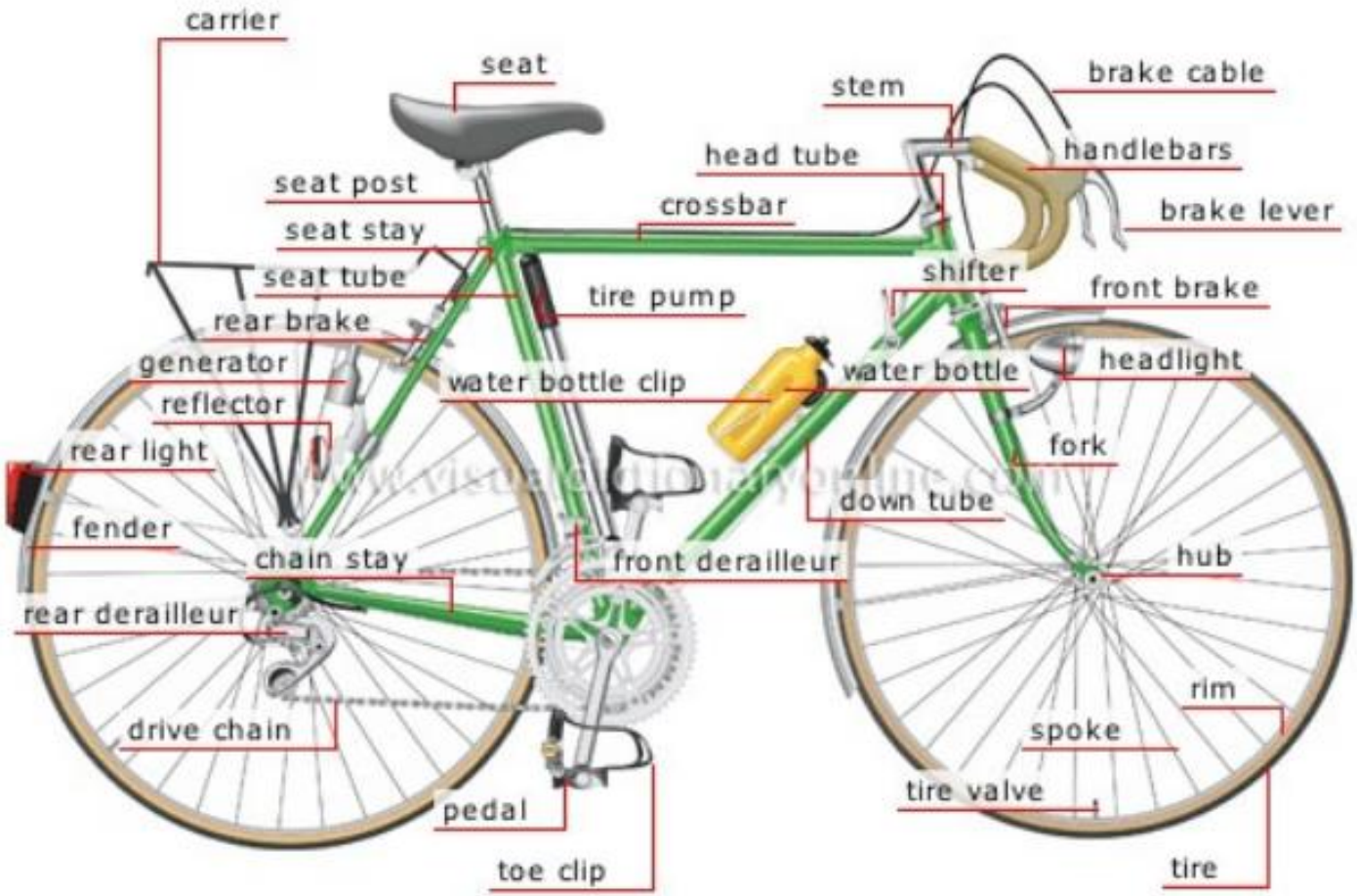

Source: https://www.quora.com/What-are-all-the-parts-of-a-bike

Product Variety

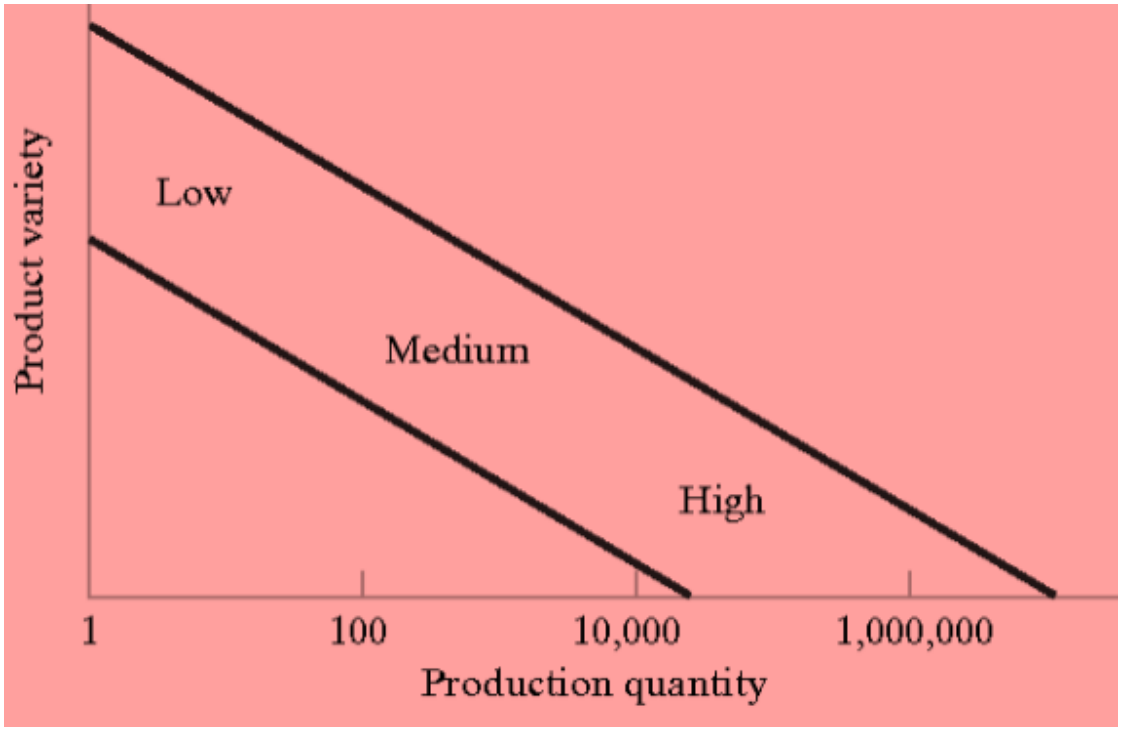

Classification of Manufacturing Processes

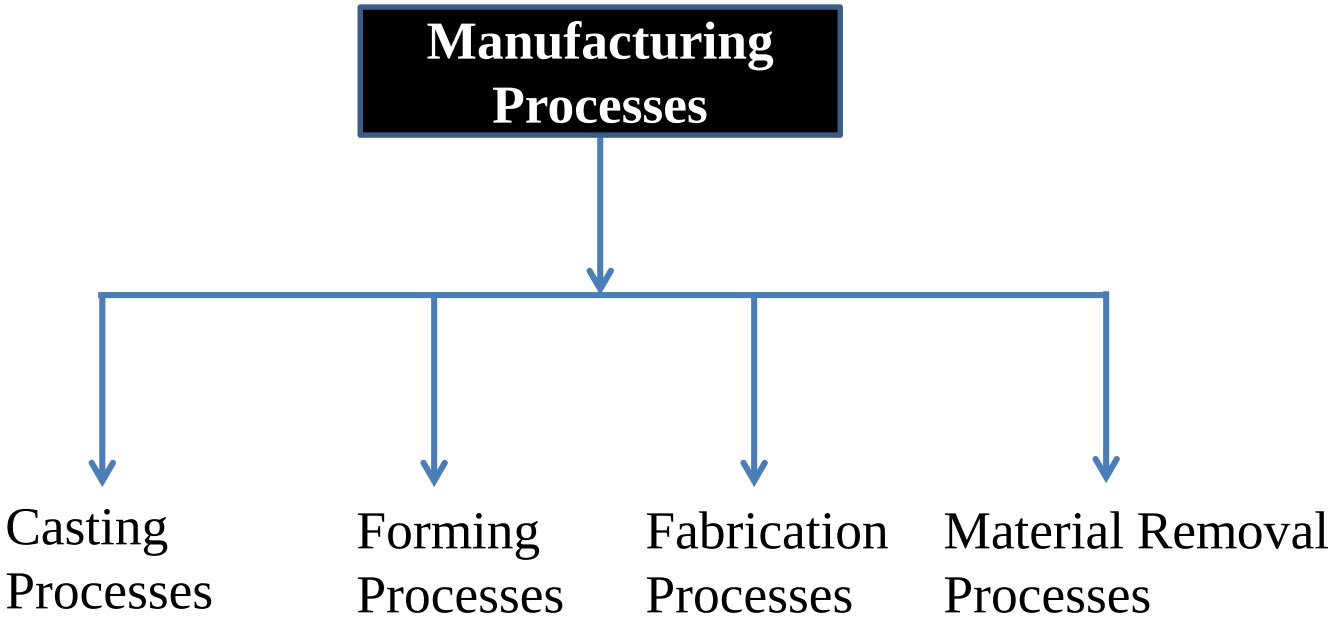

Casting Process

Casting processes consist of the use of **molten material**, usually metal. This molten material is then poured into **a mould cavity** that takes the form of the **finished part**. The molten material then cools, with heat generally being extracted via the mould, until it **solidifies** into the desired shape.

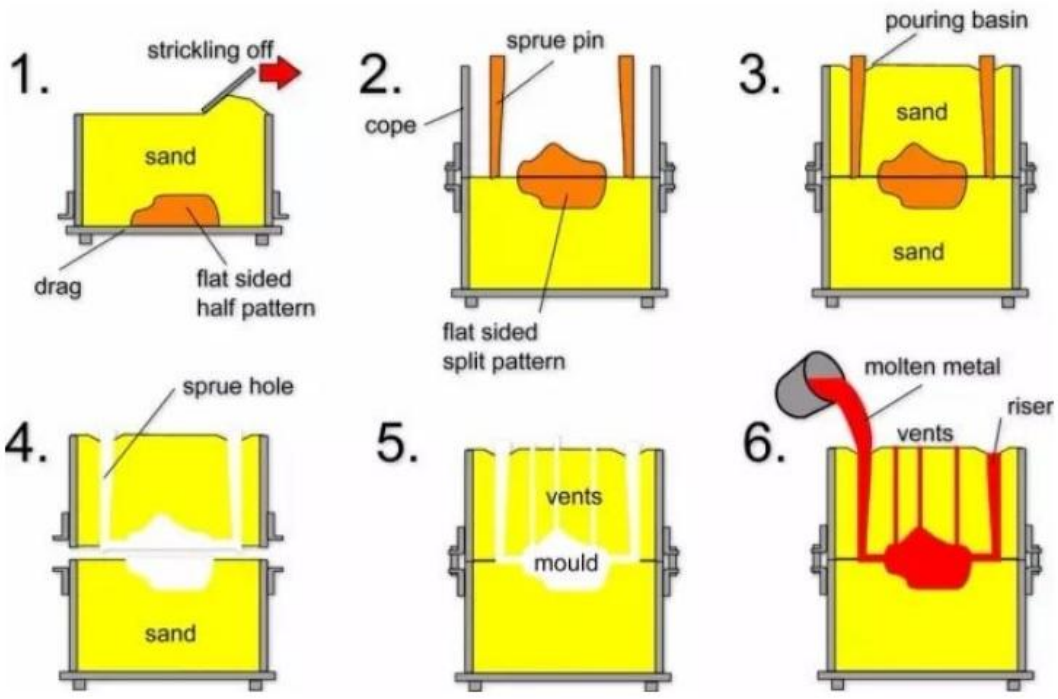

Sand casting process

Source: https://www.machinemfg.com/types-of-casting/

Classification of Casting Process

- Casting Processes
  - Expendable mould Process
    - Sand casting
    - Shell casting
    - Plaster casting
    - Ceramic casting
    - Investment casting
  - Permanent mould (PM) Process
    - Low pressure PM casting
    - Vacuum PM casting
    - Die casting
    - Squeeze casting
    - Centrifugal casting
    - Semi-Centrifugal casting
    - Injection moulding
    - Compression moulding

Forming Process

Forming processes differ from subtractive processes considering that **no material is removed**. Rather, forming processes exploit applicable stresses such as **compression, tension, shear, or a combination of stresses**, in order to malleably deform different materials into pre-defined geometrical shapes.

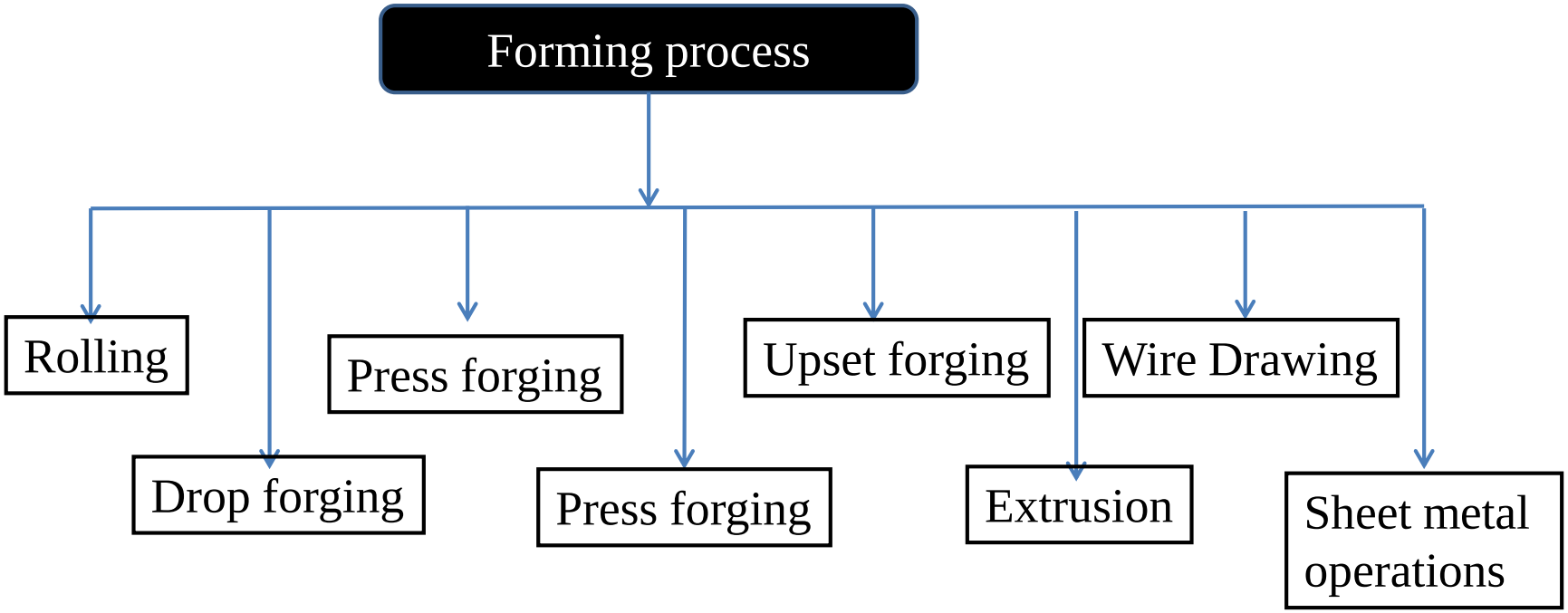

Forming Process

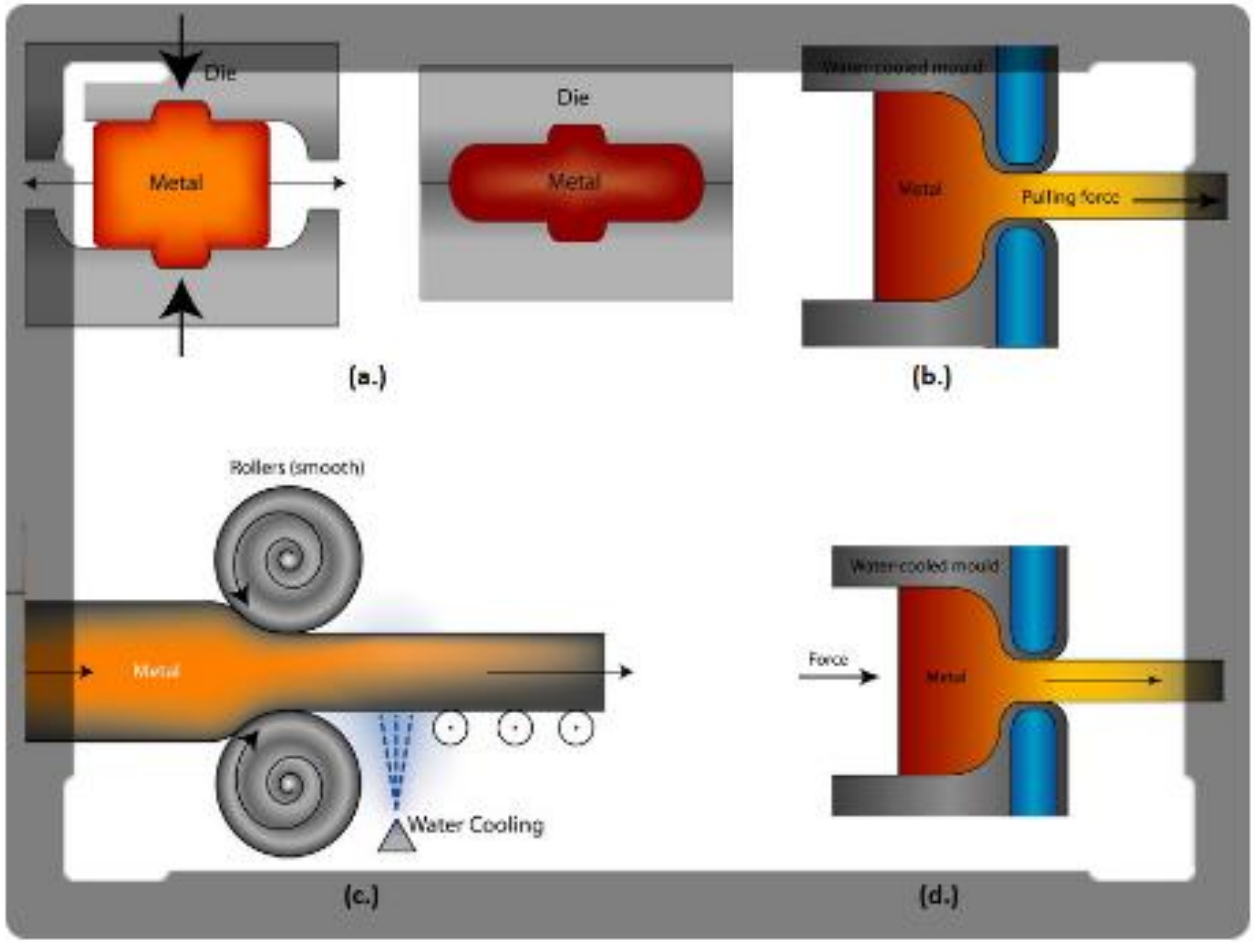

(a.) forging, (b.) drawing, (c.) rolling and (d.) extrusion

Source: DoITPoMS, University of Cambridge U.K., https://insights.globalspec.com/article/11169/metal-forming-machine-tools-part-1-bulk-metal

Fabrication Processes

Fabrication is the process of constructing products by combining typically standardised parts using one or more individual processes. For example, steel fabrication is the production of metal structures using a range of processes such as **cutting, bending and assembling**.

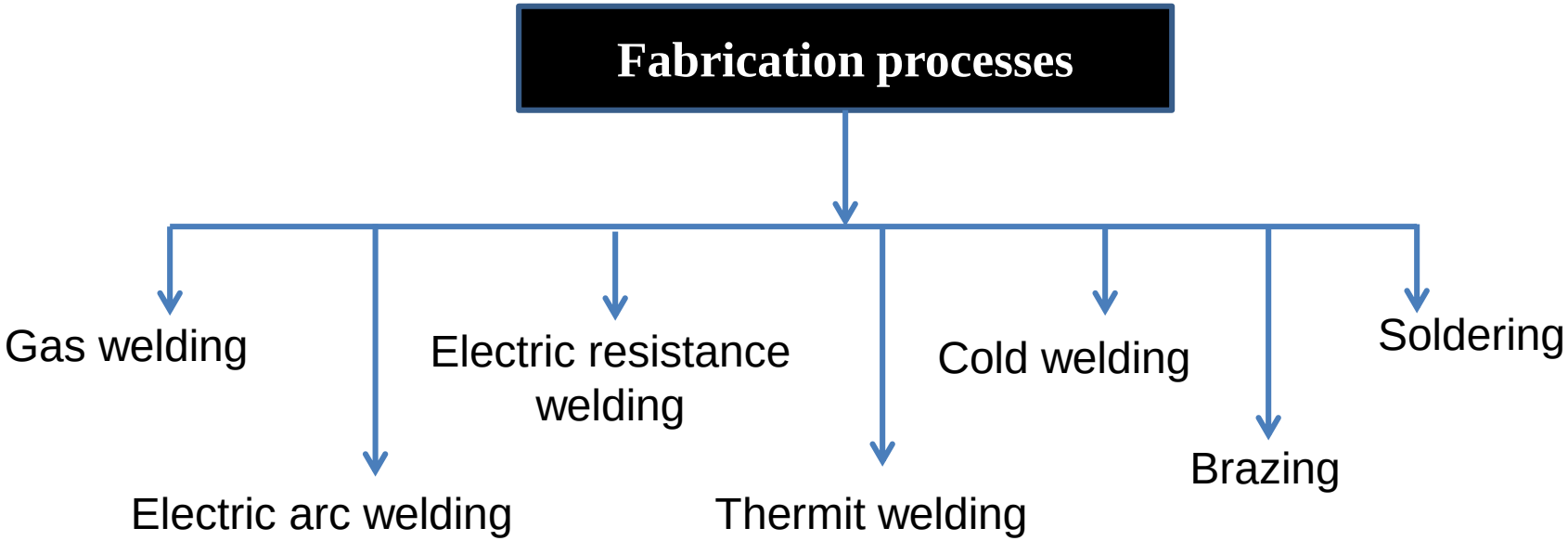

Fabrication Processes

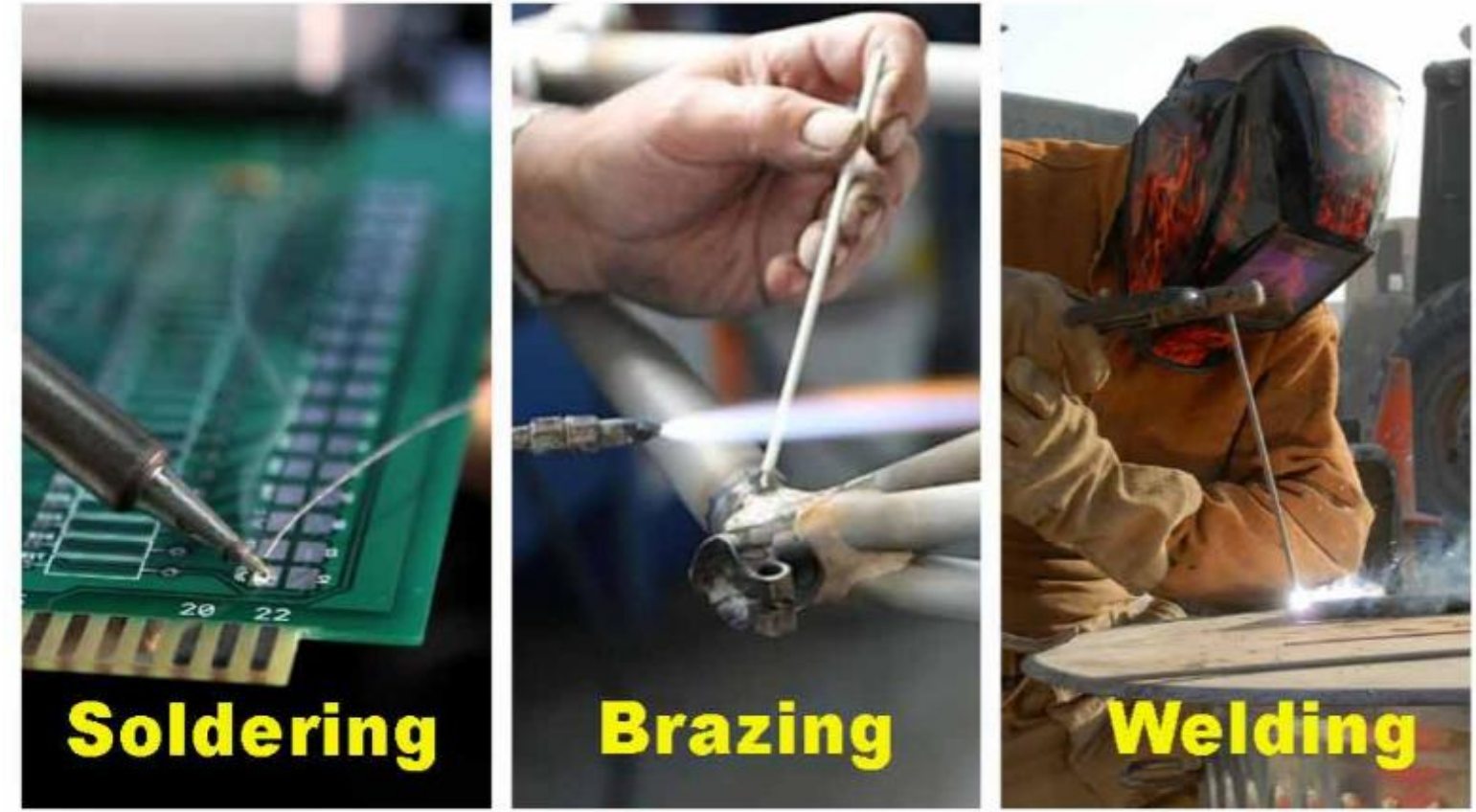

Source: https://www.cruxweld.com/blog/the-difference-between-soldering-and-brazing/

Material Removal Processes

Material removal process is a type of manufacturing process in which the **final product** is obtained by **removing excess metal from the stock.**

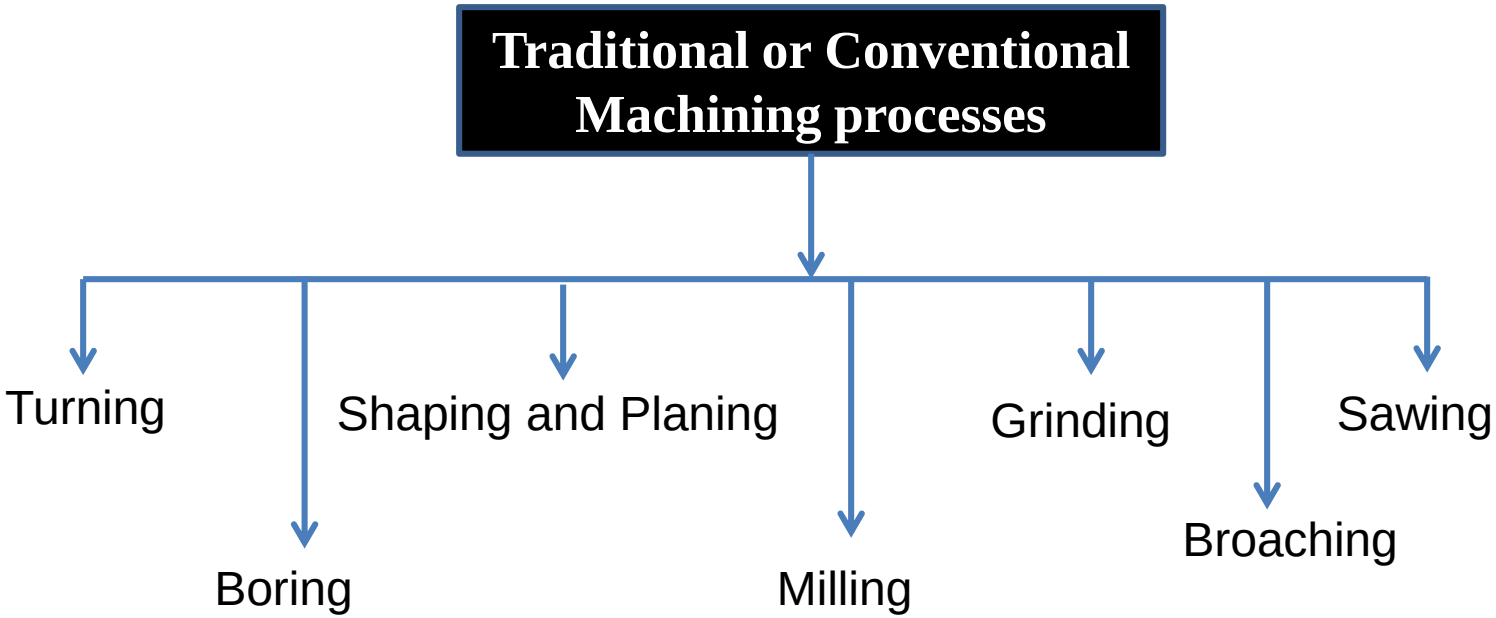

Machining Process

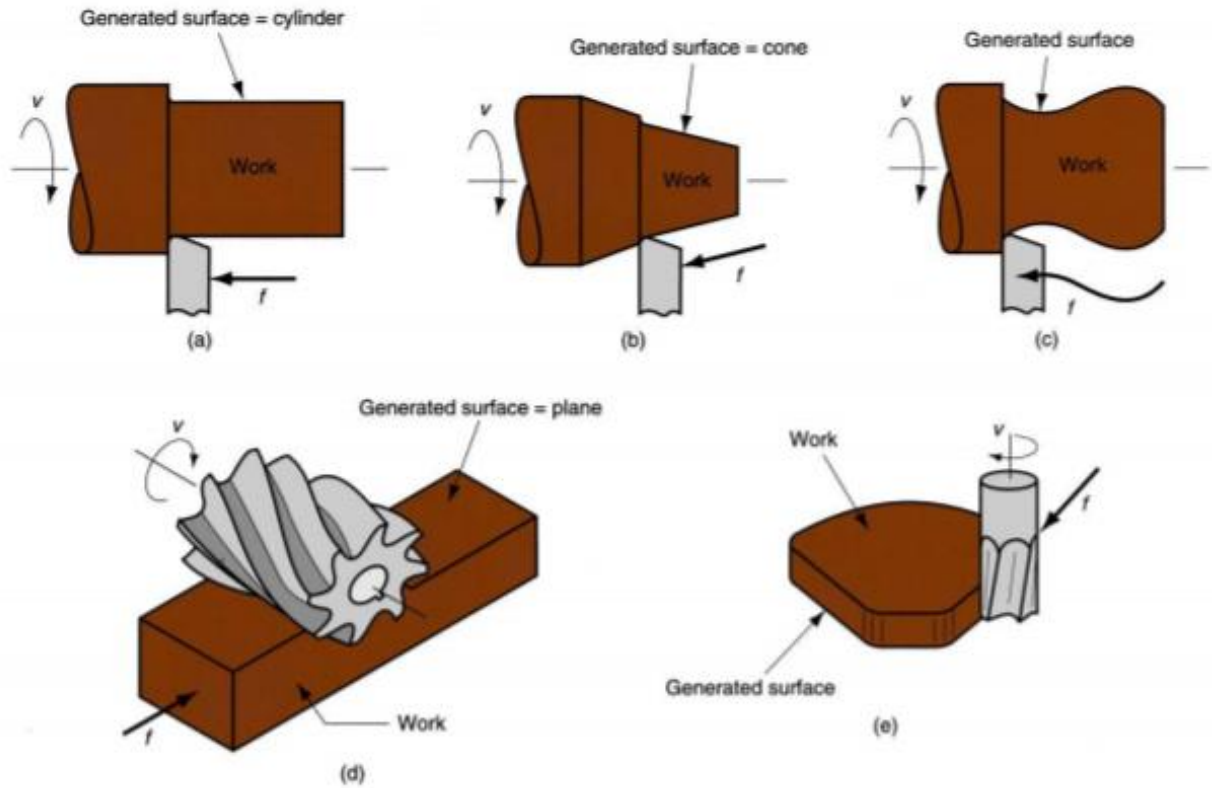

Generating shape (a) Straight turning, (b) Taper turning, (c) contour turning (d) Plain milling, (e) Profile milling

Source: https://www.uotechnology.edu.iq/dep-production/branch3e_files/2luma.pdf

THANK YOU