Analog Communication

Amplitude Modulation and Modern Communication Context

Dr Shivnarayan Patidar, NIT Goa

Communication in Modern Systems

- Modern cellular networks divide coverage into hexagonal cells.
- Frequency reuse enables efficient spectrum utilization.
- High data rate systems use MIMO (Multiple Input Multiple Output).
- Modulation enables reliable long-distance communication.
- Higher frequencies allow smaller antennas and higher bandwidth.

Cellular Technology

Voice is "up-converted" by multiplying two sinusoids.
When multiplying two sinusoids in time domain, their spectra are convolved in frequency domain.

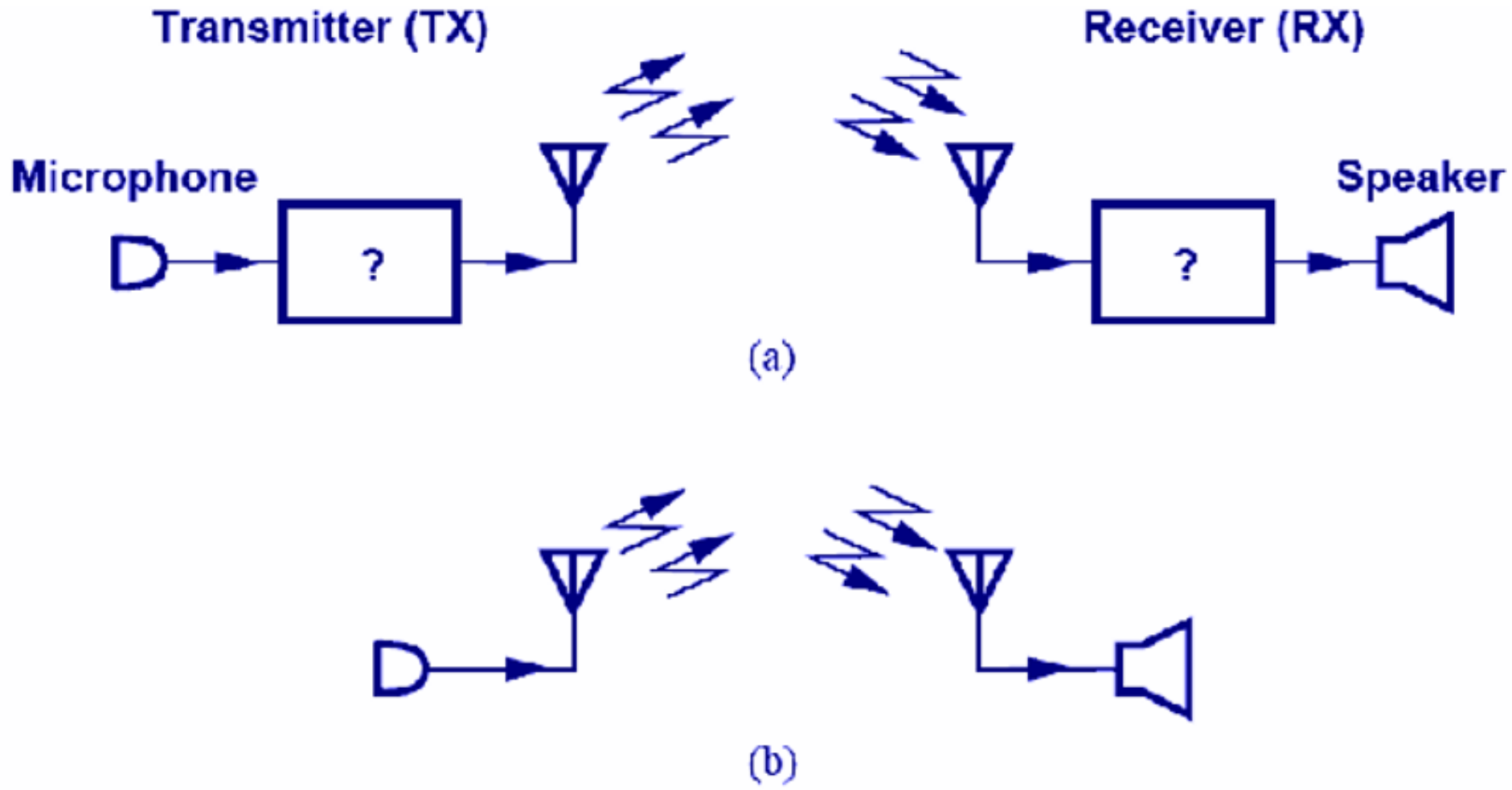

Frequency Up-conversion

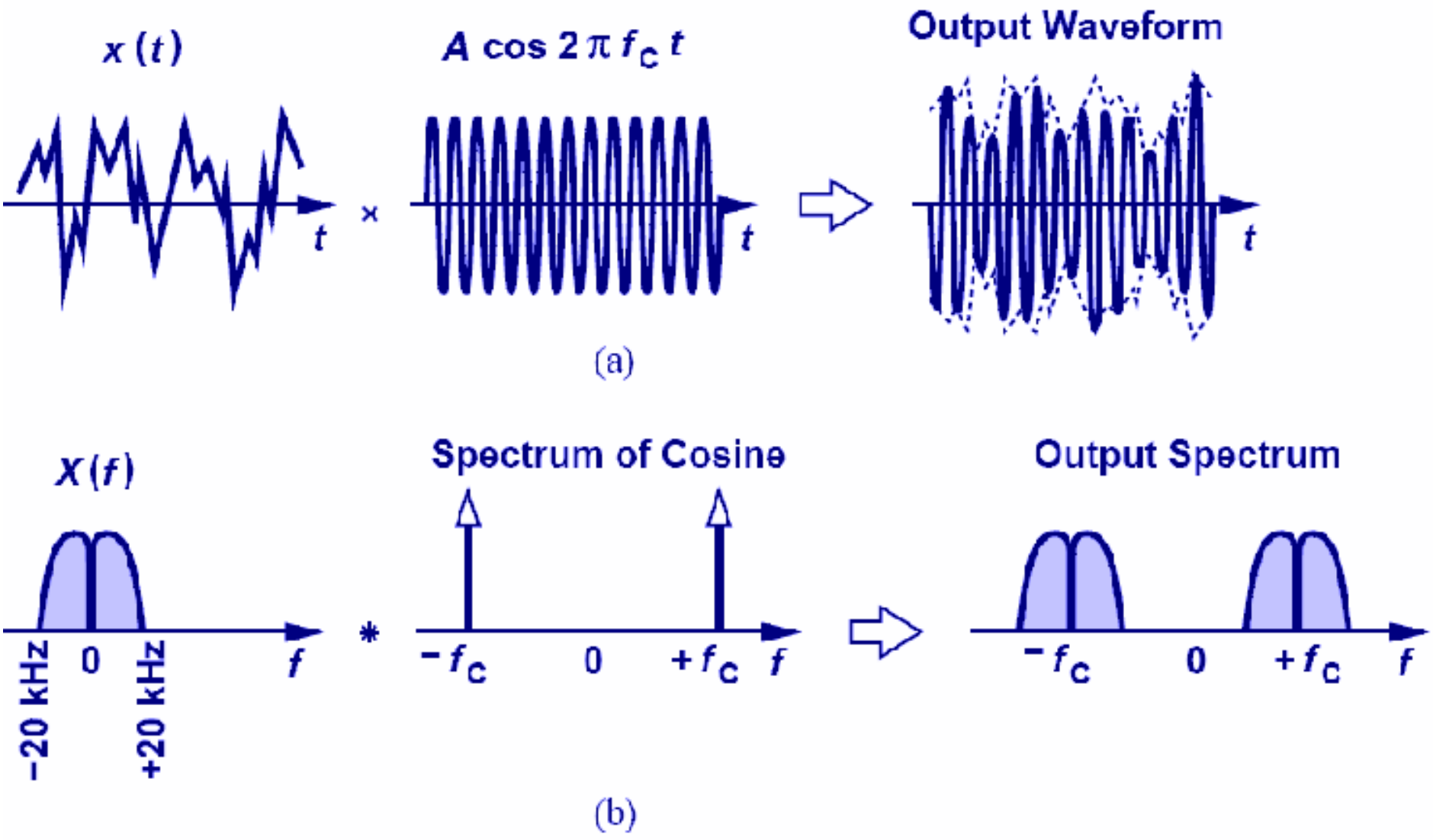

Figure: Convolution in frequency-domain

Transmitter

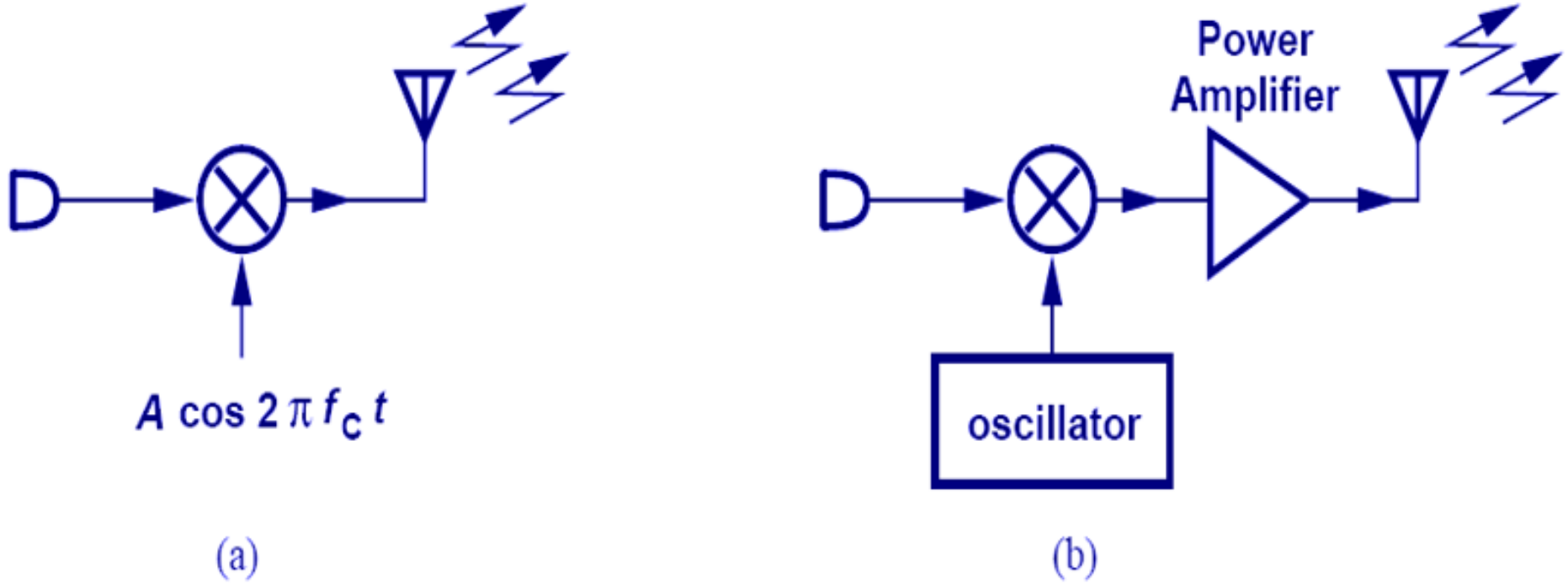

Figure: Transmitter

Receiver

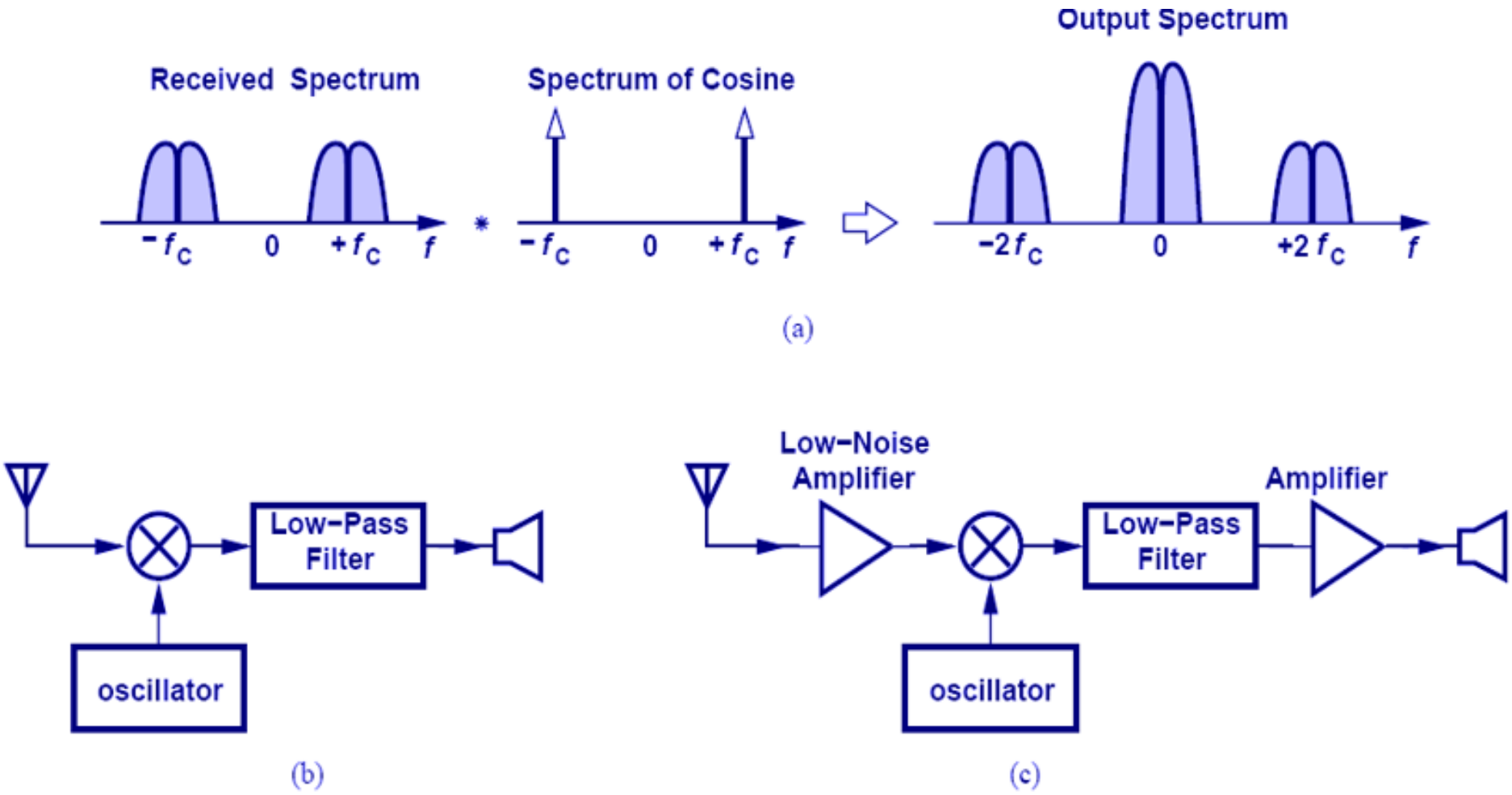

Figure: Receiver

Receiver...

High frequency is translated to DC by multiplying by carrier freq.
A low-noise amplifier is needed for signal boosting without excessive noise.

Role of Antennas in Communication

- Efficient radiation requires antenna length proportional to wavelength.
- Typical antenna size:

$$L \approx \frac{\lambda}{4}$$

- MIMO systems require antenna spacing to avoid correlation:

$$d \approx \frac{\lambda}{2}$$

- Higher carrier frequency $\rightarrow$ smaller antenna size.

Why Modulation is Essential

- Baseband communication: Baseband signals cannot be efficiently radiated.
- Large antennas required at low frequency.
- Passband communication: Modulation shifts signal to RF band.
- Enables:
  - Long-distance transmission
  - Multiplexing of users
  - Efficient spectrum utilization

Spectrum Regulation

Service/system	Frequency span
AM radio	535-1605 kHz
FM radio	88-108 MHz
Broadcast TV	54-88 MHz, 174-216 MHz, 470-698 MHz
Broadband wireless	746-764 MHz, 776-794 MHz
3G systems	1.7-1.85 GHz, 2.5-2.69 GHz
4G and 5G cellular systems	700/800/850/900 MHz, 1.8-2.1 GHz 3.3-3.8 GHz
Satellite digital radio	2.32-2.325 GHz
Multichannel multipoint distribution service (MMDS)	2.15-2.68 GHz
Digital broadcast satellite (Satellite TV)	12.2-12.7 GHz
Local multipoint distribution service (LMDS)	27.5-29.5 GHz, 31-31.3 GHz
Fixed wireless services	24-28 GHz, 38.6-40 GHz
Fixed wireless services	24-28 GHz, 38.6-40 GHz

Definition of Modulation

Modulation

Modulation is the process of varying a parameter of a high-frequency carrier in accordance with the message signal.

Carrier parameters:

- Amplitude
- Frequency
- Phase

Types of Analog Modulation

- Amplitude Modulation (AM)
- Frequency Modulation (FM)
- Phase Modulation (PM)

Amplitude Modulation

Definition

In AM, the amplitude of the carrier varies proportional to the message signal.

Carrier:

$$c(t) = A_c \cos(\omega_c t)$$

Message:

$$m(t) = A_m \cos(\omega_m t)$$

AM

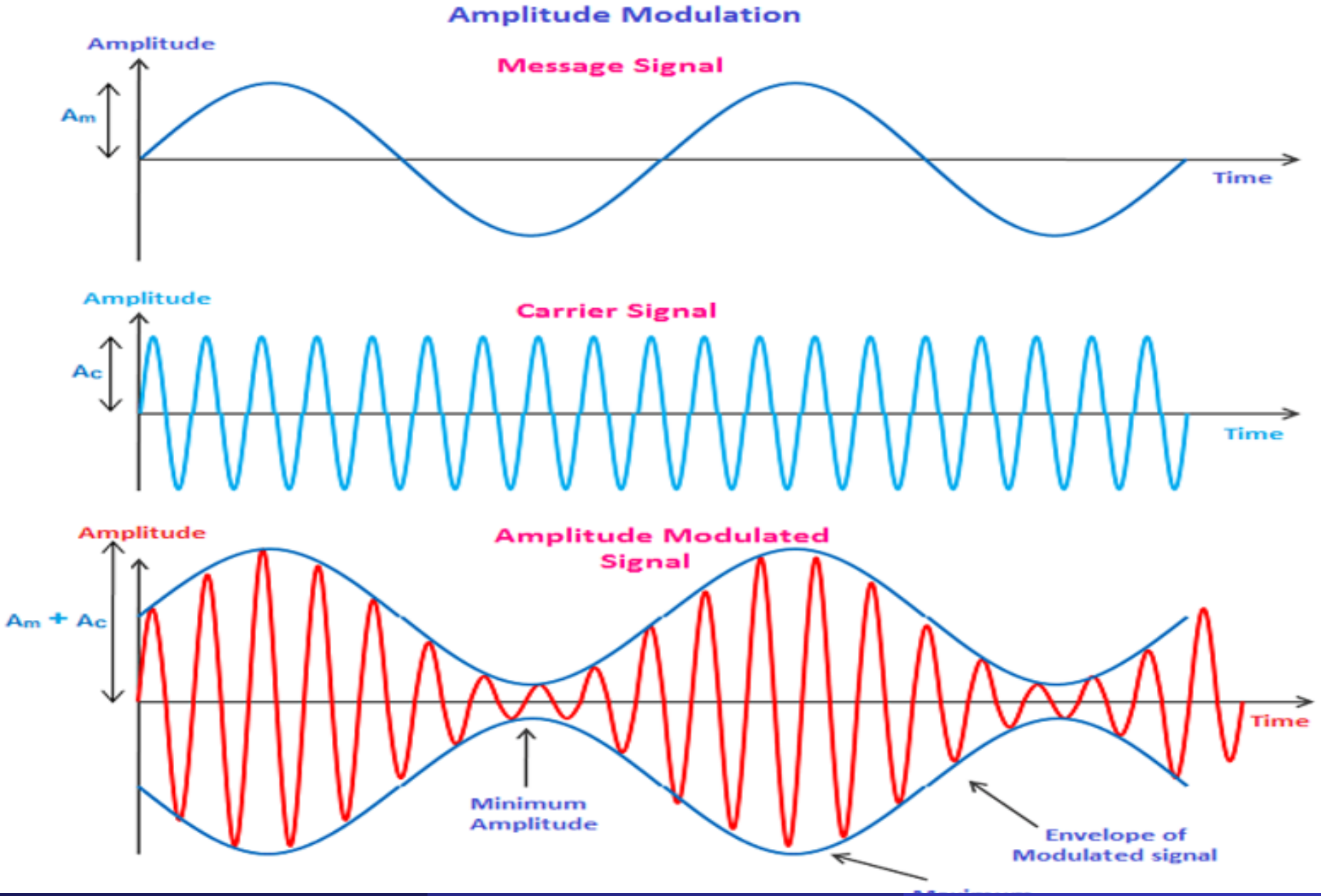
Amplitude Modulation
Amplitude
Message Signal
Am
Time
Amplitude
Carrier Signal
Ac
Time
Amplitude
Amplitude Modulated Signal
Am + Ac
Time
Minimum Amplitude
Envelope of Modulated signal

Mathematical Form of AM: Tone modulation

$$s(t) = (A_c + A_m \cos(\omega_m t)) \cos(\omega_c t)$$

$$s(t) = A_c[1 + m \cos(\omega_m t)] \cos(\omega_c t)$$

- Carrier frequency unchanged
- Sidebands appear around carrier
- m:modulation index

Modulation Index

$$m = \frac{V_m}{V_c}$$

- $m < 1 \rightarrow$ Under-modulation
- $m = 1 \rightarrow$ Ideal modulation
- $m > 1 \rightarrow$ Over-modulation and distortion

Degree of AM Modulation

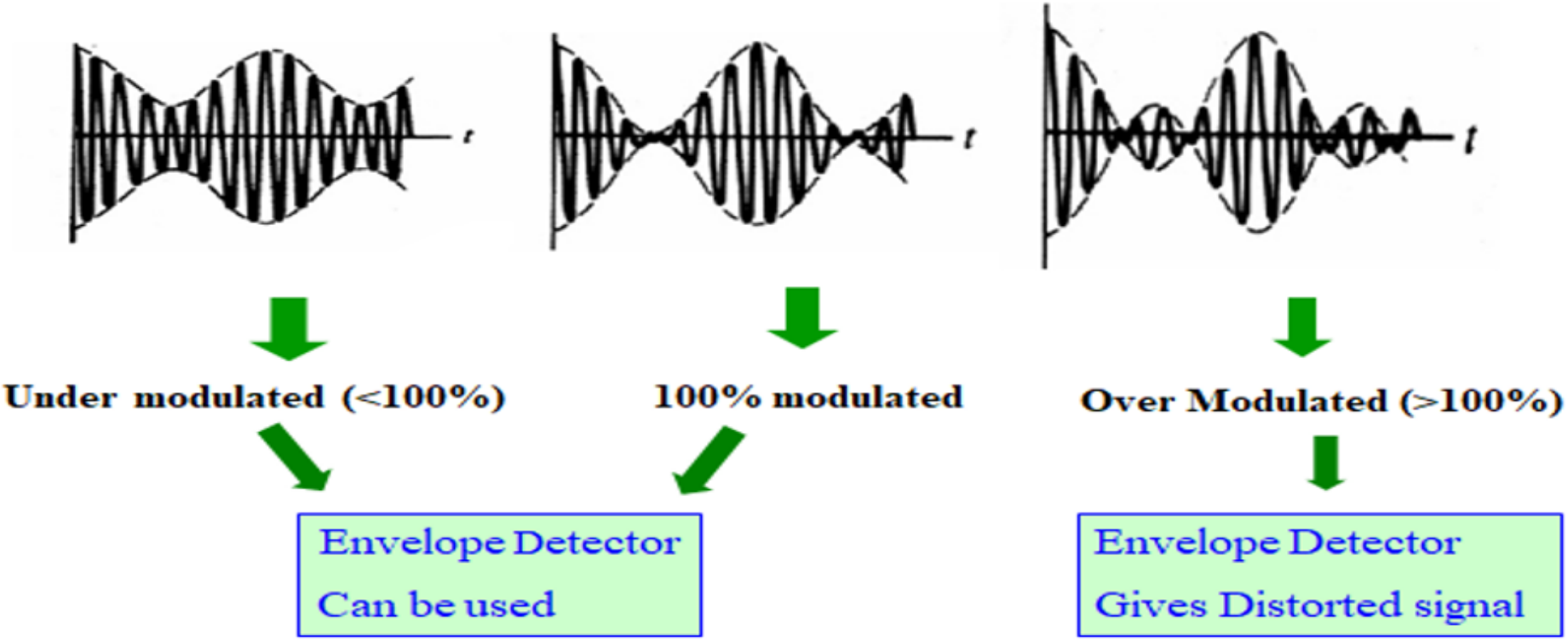

Figure: Receiver

Amplitude Modulation (AM), DSB with Carrier: Definition

Carrier:

$$c(t) = V_c \cos \omega_c t$$

AM signal:

$$v(t) = V_c(1 + m(t)) \cos \omega_c t$$

where $m(t)$ is normalized message signal.

Normalized Message Signal in AM

AM signal:

$$v(t) = V_c\big(1 + m(t)\big)\cos\omega_c t$$

Normalized message signal means:

$$|m(t)| \leq 1$$

Thus the message signal is scaled so that its maximum amplitude is 1.

Actual (non-normalized) message:

$$m_{actual}(t) = V_m \cos\omega_m t$$

AM expression becomes:

$$v(t) = V_c\big(1 + k_a m_{actual}(t)\big)\cos\omega_c t$$

where k_a is amplitude sensitivity.

Normalized Message Signal in AM

If we define:

$$m = k_a V_m$$

then

$$m(t) = m \cos \omega_m t$$

which is dimensionless and normalized.

Single Tone Modulation

Message:

$$m(t) = m \cos \omega_m t$$

AM wave:

$$v(t) = V_c(1 + m \cos \omega_m t) \cos \omega_c t$$

Using identity:

$$\cos A \cos B = \frac{1}{2}[\cos(A - B) + \cos(A + B)]$$

$$v(t) = V_c \cos \omega_c t + \frac{mV_c}{2} \cos(\omega_c - \omega_m)t + \frac{mV_c}{2} \cos(\omega_c + \omega_m)t$$

Spectrum of Single Tone AM

$$f_c, \quad f_c - f_m, \quad f_c + f_m$$

$$BW = 2f_m$$

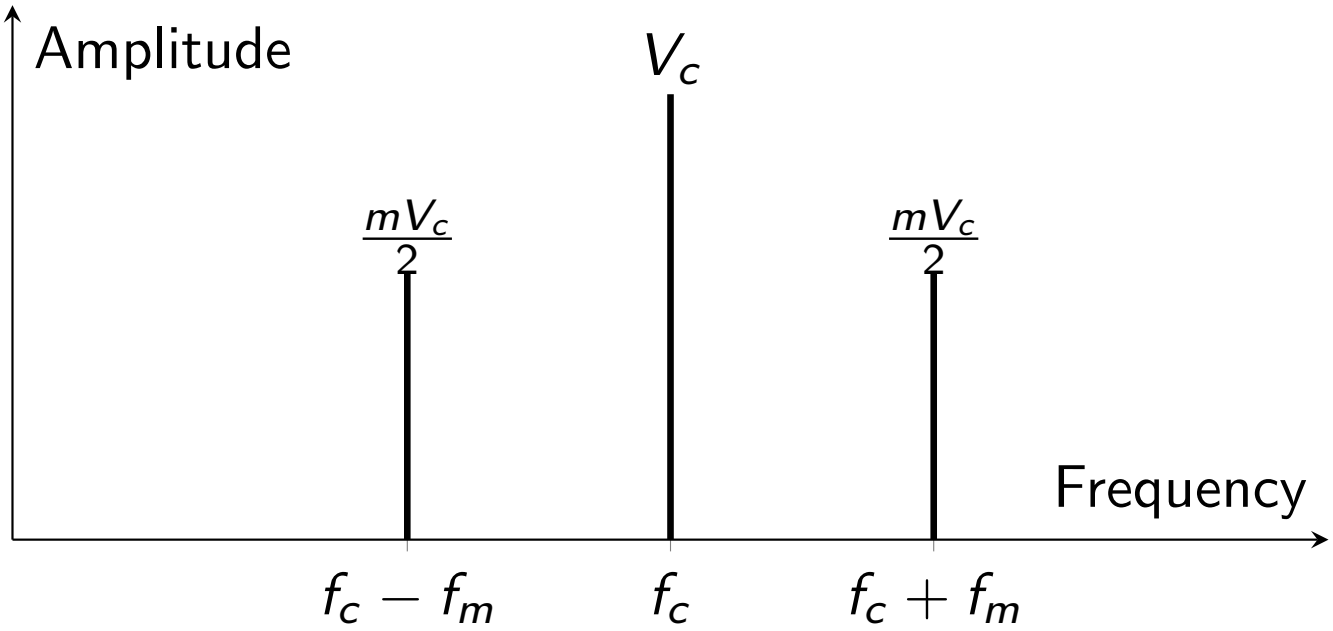

Spectrum of Single Tone AM

Frequencies present:

$$f_c, \quad f_c - f_m, \quad f_c + f_m$$

Amplitudes:
Carrier: V_c
Sidebands: $\frac{mV_c}{2}$
Bandwidth:

$$BW = 2f_m$$

General Message (Voice Signal)

General AM:

$$v(t) = V_c \cos \omega_c t + K_a V_c m(t) \cos \omega_c t$$

Fourier Transform:

$$V(f) = \frac{V_c}{2}[\delta(f - f_c) + \delta(f + f_c)] + \frac{K_a V_c}{2}[M(f - f_c) + M(f + f_c)]$$

Thus baseband spectrum shifts to $\pm f_c$.
Bandwidth:

$$BW = 2f_{max}$$

AM Spectrum for Voice Signal

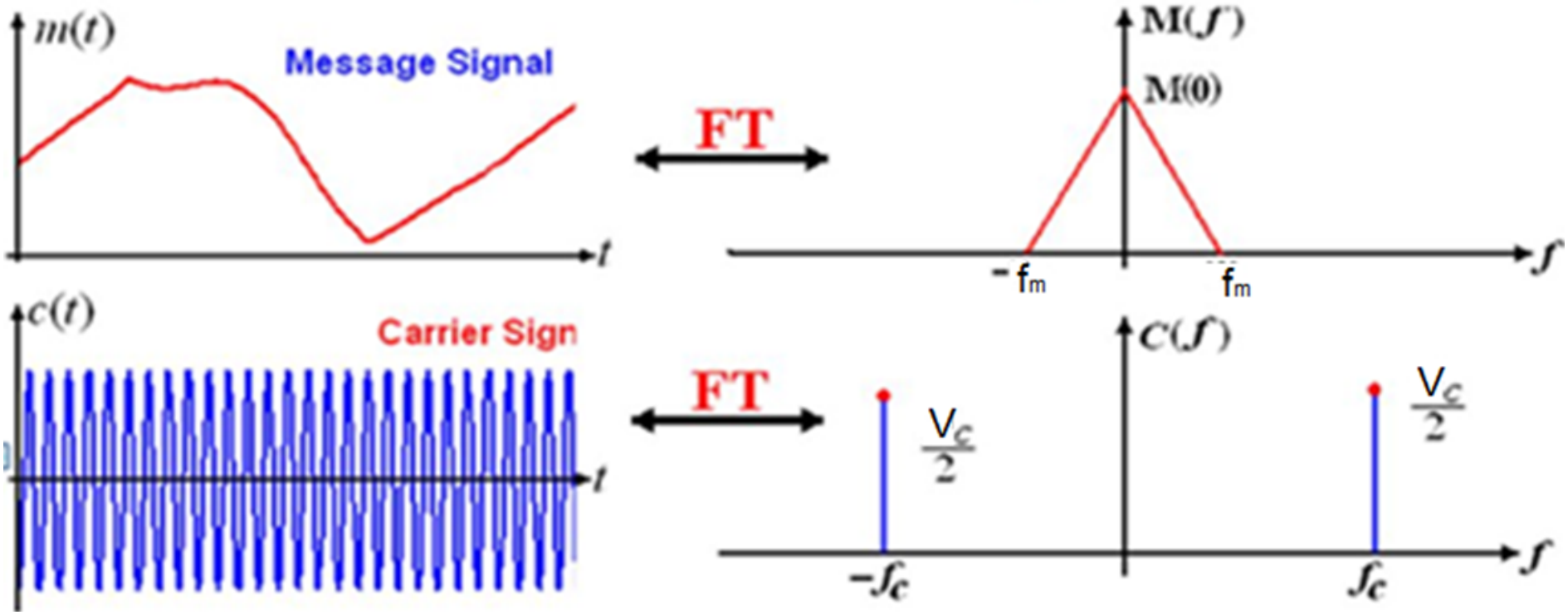

AM Spectrum for Voice Signal

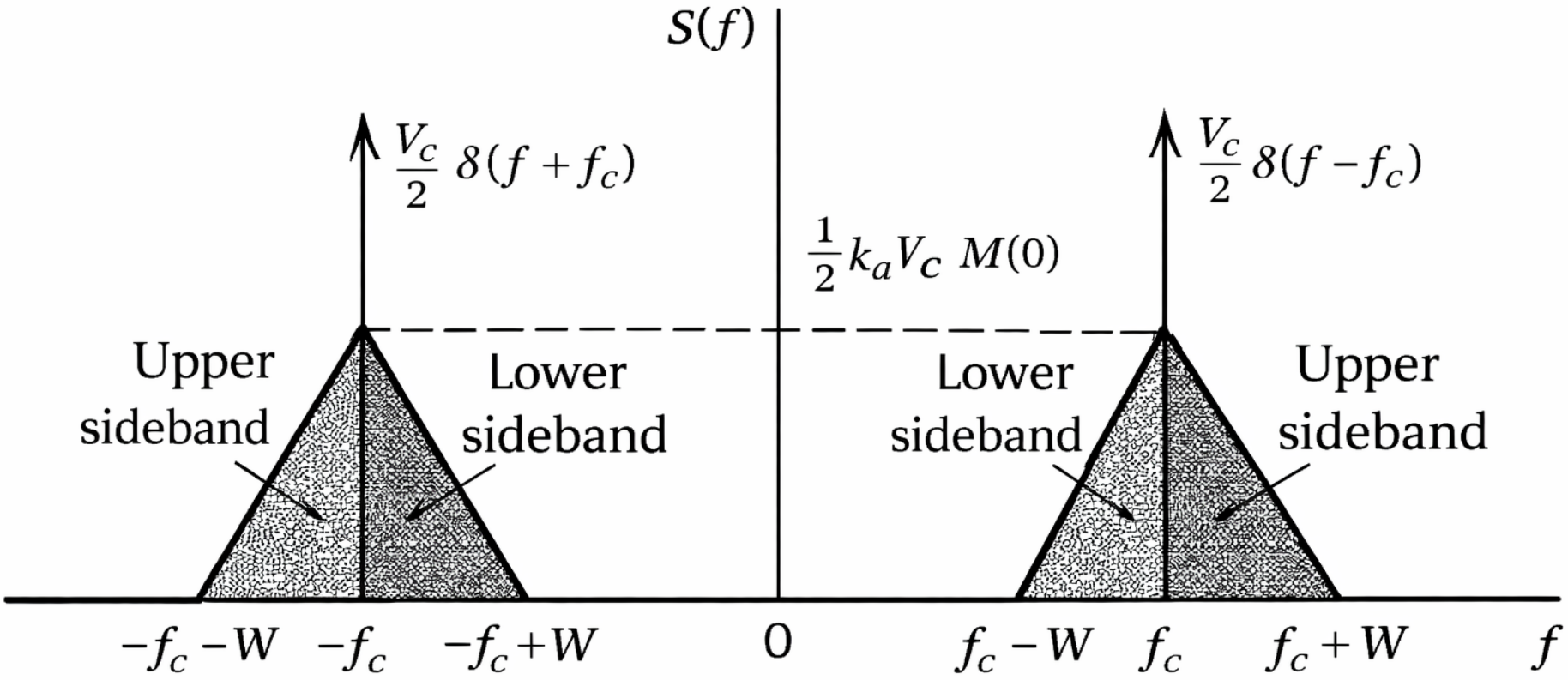

Modulation Index from CRO Display:Tone modulation case

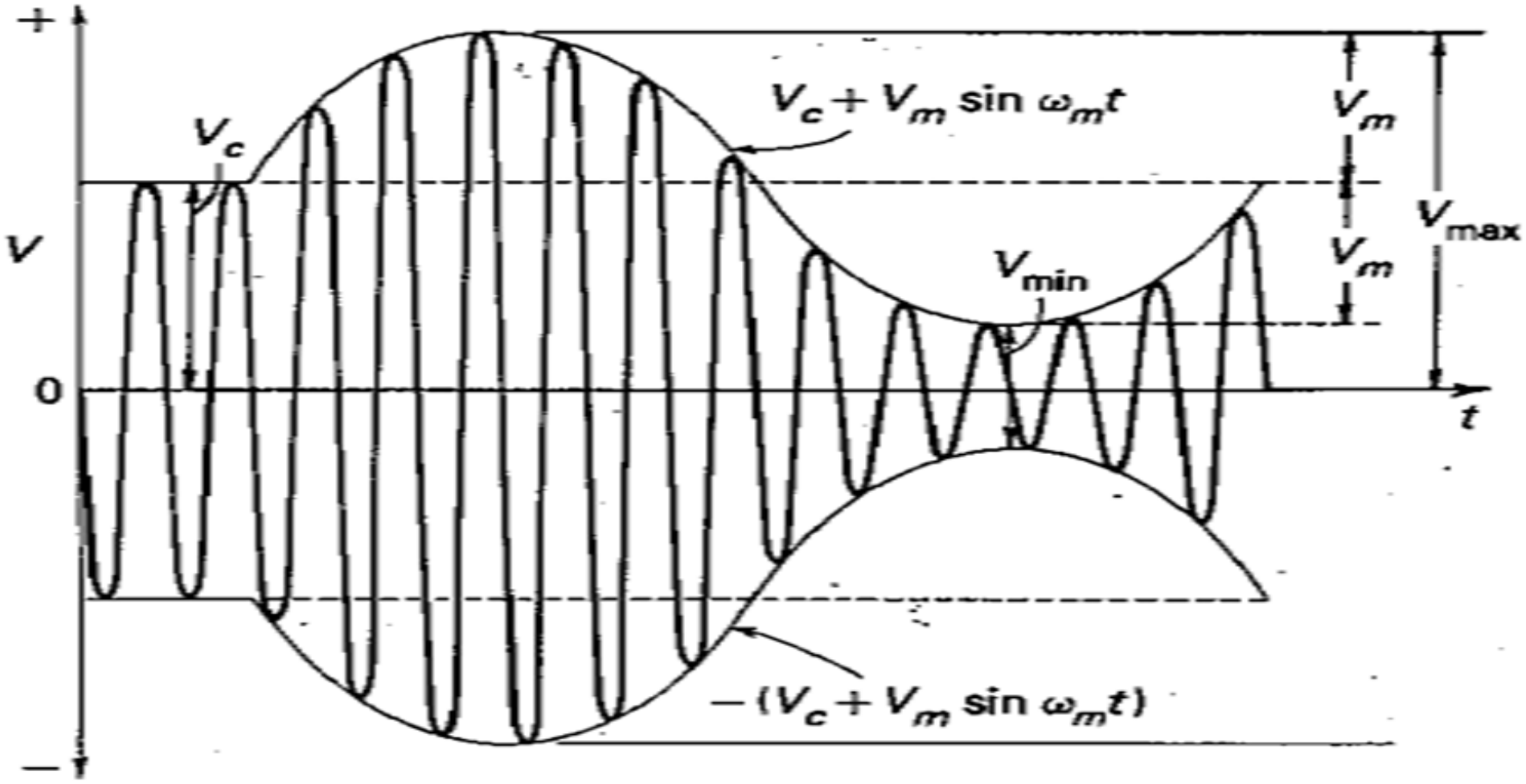

Modulation Index from CRO Display...

Envelope maximum and minimum values:

$$V_{max} = V_c + V_m$$
$$V_{min} = V_c - V_m$$

From these,

$$V_m = \frac{V_{max} - V_{min}}{2}$$

$$V_c = \frac{V_{max} + V_{min}}{2}$$

Therefore, modulation index:

$$m = \frac{V_m}{V_c}$$

$$\boxed{m = \frac{V_{max} - V_{min}}{V_{max} + V_{min}}}$$

Power Relations in AM

Carrier Power:

$$P_c = \frac{V_c^2}{2R}$$

Sideband Power:

$$P_{LSB} = P_{USB} = \frac{m^2 V_c^2}{8R}$$

Total Power:

$$P_t = P_c \left(1 + \frac{m^2}{2}\right)$$

Efficiency of AM

Transmission efficiency:

$$\eta = \frac{\text{Sideband Power}}{\text{Total Power}}$$

$$\eta = \frac{m^2/2}{1 + m^2/2}$$

For $m = 1$:

$$\eta = 33.3\%$$

Maximum total power:

$$P_t = 1.5 P_c$$

Square Law Modulator

Principle:

- Uses nonlinear device (diode or transistor).
- Input: carrier + message applied together.
- Device characteristic approximated as:

$$v_o = a_1 v_i + a_2 v_i^2$$

- Squared term produces mixing products.
- Bandpass filter extracts AM signal around carrier frequency.

Square Law Modulator

Output of nonlinear device

$$v_o(t) = a_1 v_i(t) + a_2 v_i^2(t) \tag{1}$$

Input to the nonlinear device

$$v_i(t) = m(t) + A_c \cos(2\pi f_c t) \tag{2}$$

Substituting (2) in (1):Output of the nonlinear device becomes:

$$v_o(t) = a_1 \left[m(t) + A_c \cos(2\pi f_c t)\right] + a_2 \left[m(t) + A_c \cos(2\pi f_c t)\right]^2$$

$$= a_1 m(t) + a_1 A_c \cos(2\pi f_c t) + a_2 m^2(t) + a_2 A_c^2 \cos^2(2\pi f_c t) + 2a_2 A_c m(t) \cos(2\pi f_c$$

$$= a_1 m(t) + a_2 m^2(t) + a_2 A_c^2 \cos^2(2\pi f_c t) + A_c a_1 \left[1 + \frac{2a_2}{a_1} m(t)\right] \cos(2\pi f_c t)$$

Square Law Modulator

Output of the bandpass filter (bandwidth $2W$ centered at $f = f_c$):

$$u(t) = A_c a_1 \left[1 + \frac{2a_2}{a_1} m(t)\right] \cos(2\pi f_c t)$$

$$\text{where } \frac{2a_2|m(t)|}{a_1} < 1$$

Square Law Modulator: Block Diagram

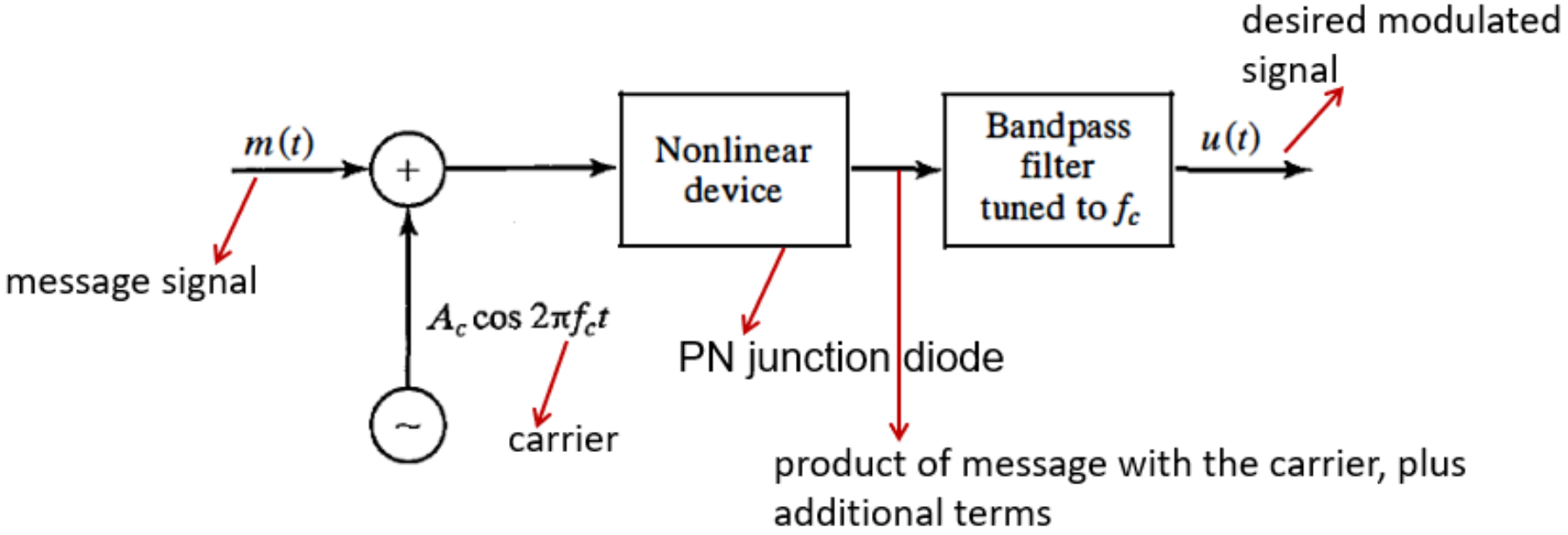

Square Law Modulator: Circuit Diagram

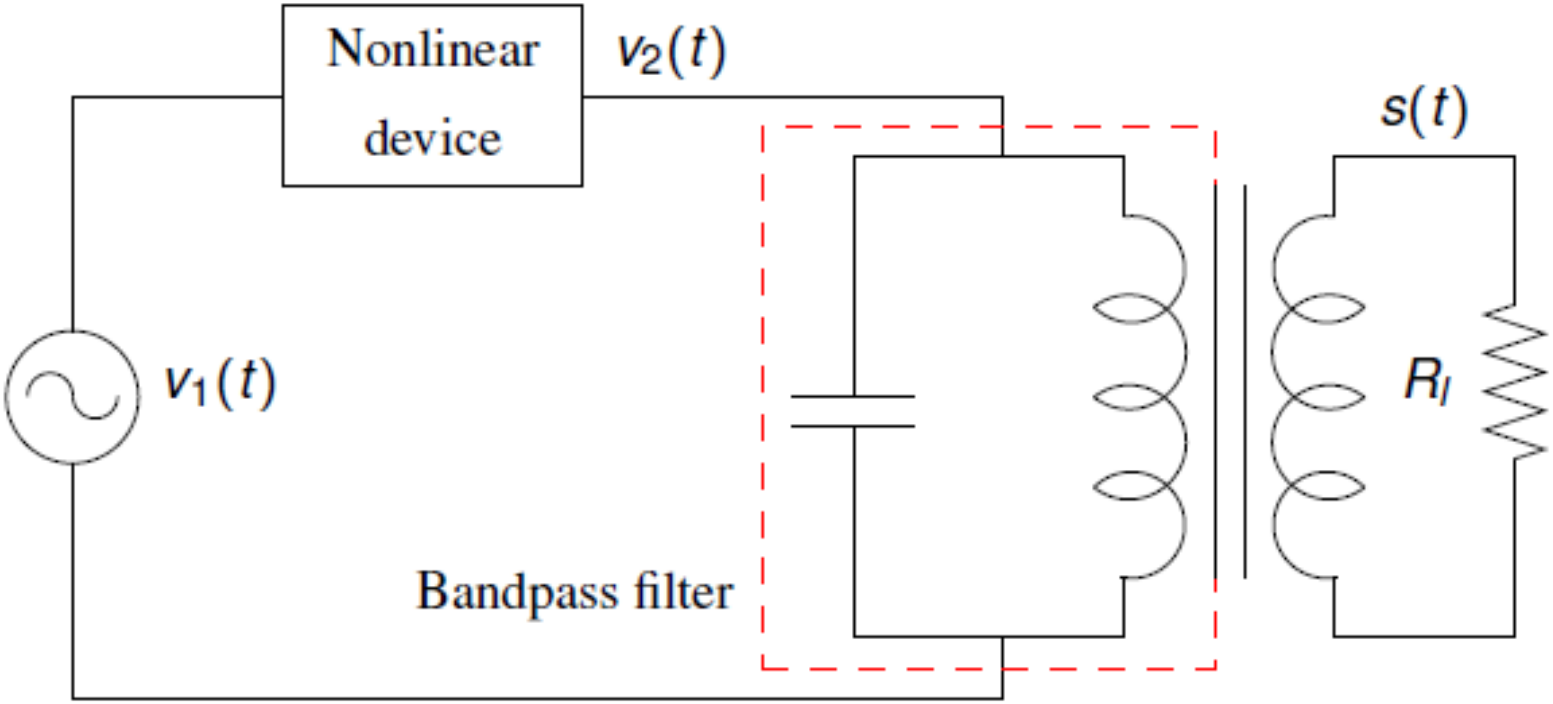

Square Law Modulator Circuit Notes

- Requires biasing in nonlinear region.
- Low input amplitudes to keep higher-order terms negligible.
- Output filter centered at carrier frequency.
- Efficiency limited by device nonlinearity.

Switching Modulator – Principle

Switching modulator is similar to the square-law modulator.

- In square-law modulator, diode operates in **nonlinear region**.
- In switching modulator, diode operates as an **ideal switch**.

Modulating signal:

$$m(t)$$

Carrier signal:

$$c(t) = A_c \cos(2\pi f_c t)$$

Both signals are applied to the diode.

$$v_i(t) = m(t) + A_c \cos(2\pi f_c t)$$

Switching Modulator: Circuit Diagram

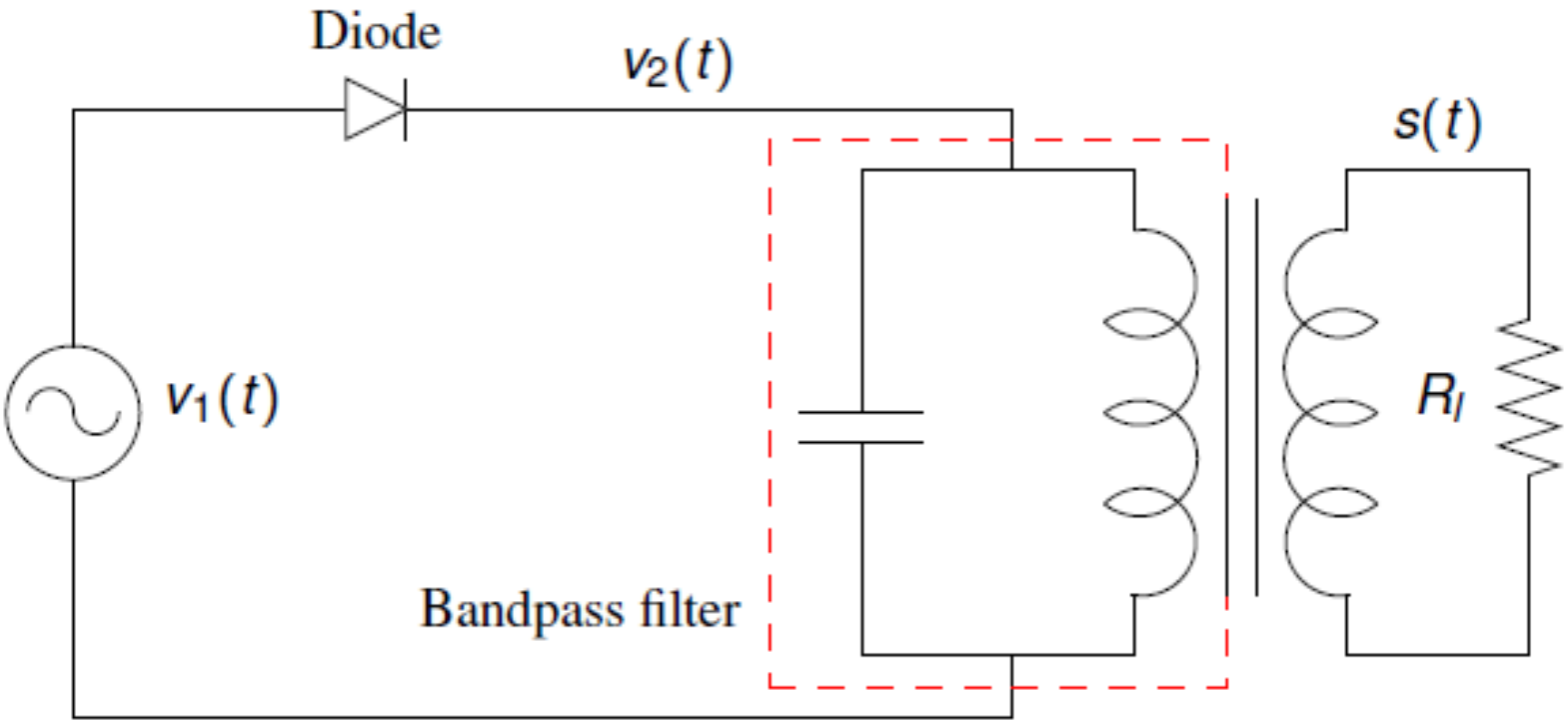

Operation of Switching Modulator

Assume:

$$A_c \gg m(t)$$

Hence, diode ON/OFF action is controlled by carrier signal.

- Forward biased when $c(t) > 0$
- Reverse biased when $c(t) < 0$

Output of diode:

$$v_o(t) = \begin{cases} v_i(t), & c(t) > 0 \\ 0, & c(t) < 0 \end{cases}$$

Approximation:

$$v_o(t) = v_i(t)\, s(t)$$

where $s(t)$ is a periodic pulse train with period

$$T_p = \frac{1}{f_c}$$

Fourier Series Representation

Switching function $s(t)$ can be represented as:

$$s(t) = \frac{1}{2} + \frac{2}{\pi} \sum_{n=1}^{\infty} \frac{(-1)^{n-1}}{2n-1} \cos\left[2\pi f_c t(2n-1)\right]$$

Output becomes:

$$v_o(t) = [m(t) + A_c \cos(2\pi f_c t)]s(t)$$

After simplification:

$$v_o(t) = \frac{A_c}{2}\left[1 + \frac{4}{\pi A_c} m(t)\right] \cos(2\pi f_c t) + \text{other terms}$$

Bandpass Filtering and Final AM Signal

The output is passed through a **bandpass filter**

$$\text{Center frequency } f = f_c, \quad \text{Bandwidth } = 2W$$

Desired conventional AM signal:

$$u(t) = \frac{A_c}{2}\left[1 + \frac{4}{\pi A_c} m(t)\right] \cos(2\pi f_c t)$$

Standard AM equation:

$$s(t) = A_c[1 + k_a m(t)] \cos(2\pi f_c t)$$

Comparing,

$$\text{Scaling factor} = \frac{1}{2}$$

$$k_a = \frac{4}{\pi A_c}$$

AM Demodulation

Envelope Detector

- Diode rectifies AM signal.
- RC filter follows envelope.
- Output approximates original message signal.

Envelope Detector Circuit Diagram

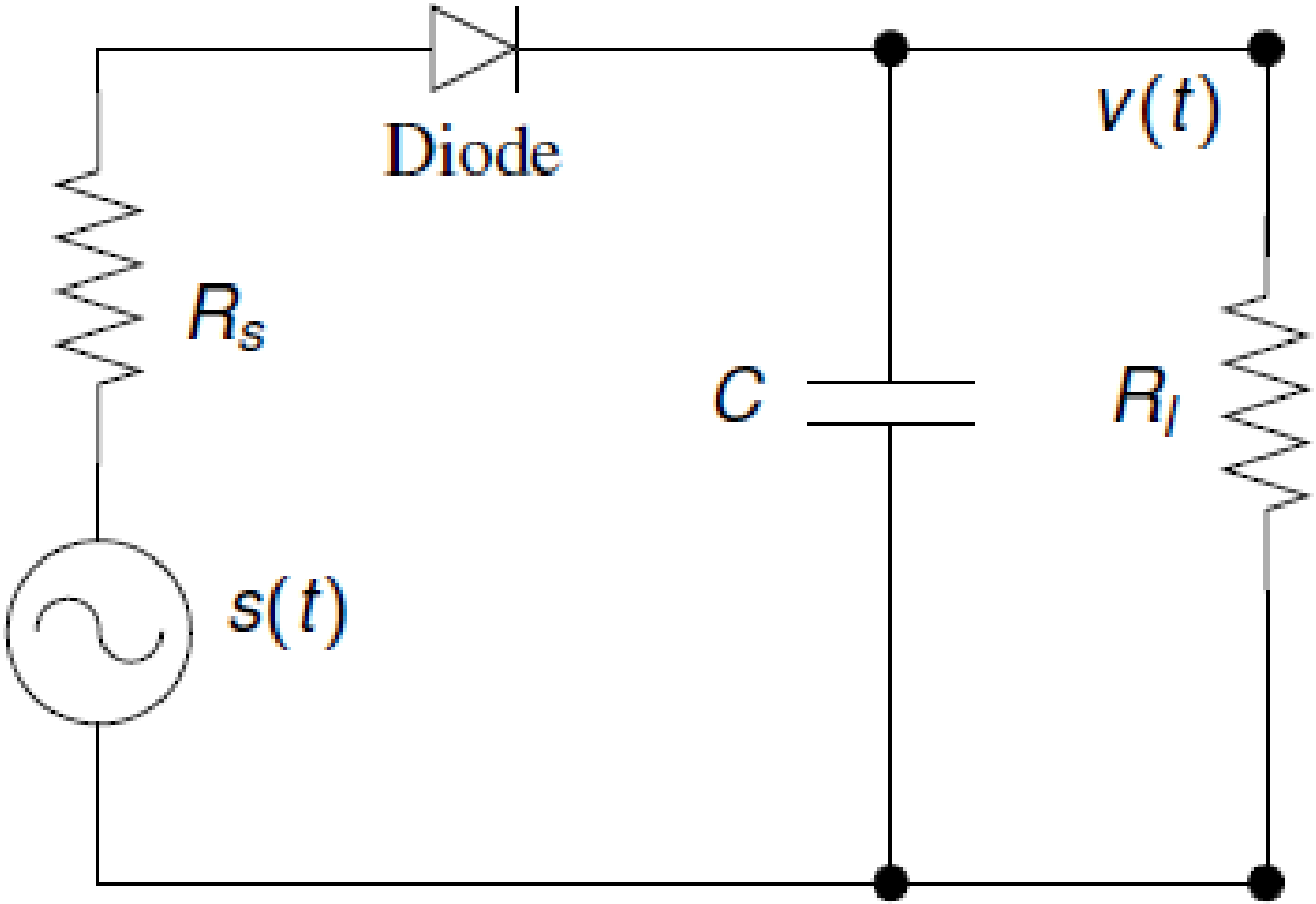

Envelope Detector Design

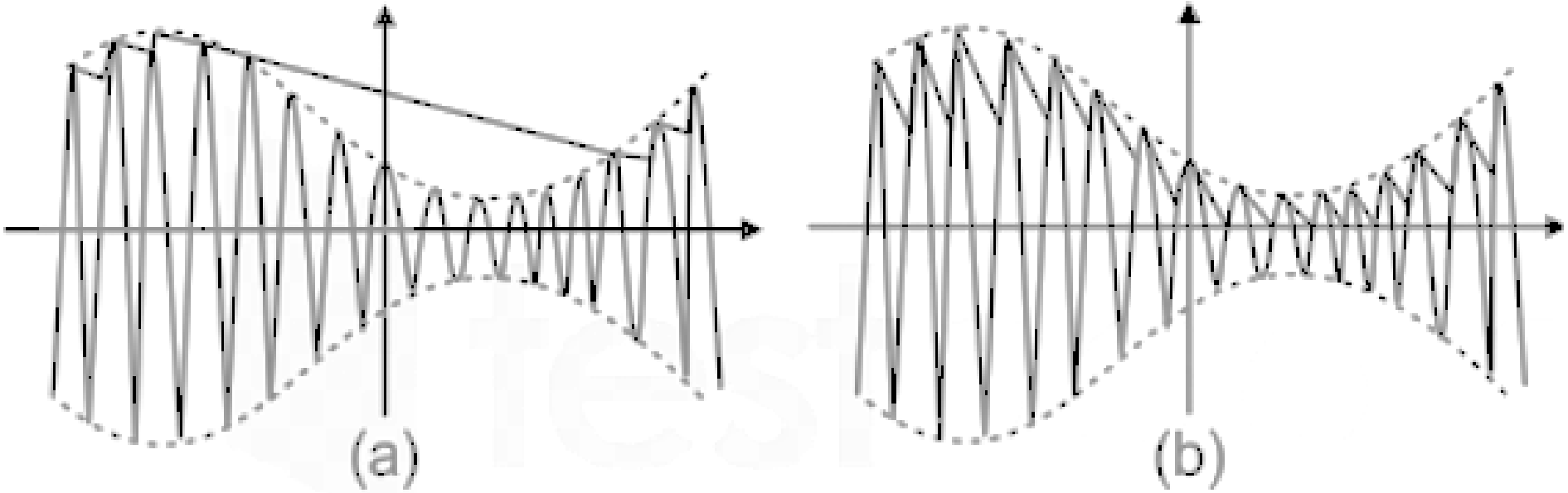

Effect of (a) large and (b) small RC values on the performance of the envelope detector

Envelope Detector Design

- RC must satisfy:

$$\frac{1}{f_c} \ll RC \ll \frac{1}{f_m}$$

- Too small RC $\rightarrow$ ripple
- Too large RC $\rightarrow$ distortion

Problem 1: Envelope Detector Design

An audio signal of bandwidth $W = 5$ kHz is modulated on a carrier of frequency $f_c = 1$ MHz using conventional AM.
Determine the range of RC for successful demodulation using an envelope detector.

Condition for proper detection:

$$\frac{1}{f_c} \ll RC \ll \frac{1}{W}$$

$$\frac{1}{10^6} \ll RC \ll \frac{1}{5 \times 10^3}$$

$$10^{-6} \ll RC \ll 2 \times 10^{-4} \text{ seconds}$$

Problem 2: DSB-SC AM Signal and Spectrum

Given:

$$m(t) = a\cos(2\pi f_m t), \quad f_m \ll f_c$$

Obtain the Lower and Upper side bands for DSB-SC signal and plot them in spectrum?

Solution:

$$u(t) = m(t)c(t) = A_c a\cos(2\pi f_m t)\cos(2\pi f_c t)$$

$$= \frac{A_c a}{2}\cos[2\pi(f_c - f_m)t] + \frac{A_c a}{2}\cos[2\pi(f_c + f_m)t]$$

Upper Sideband:

$$u_u(t) = \frac{A_c a}{2}\cos[2\pi(f_c + f_m)t]$$

Lower Sideband:

$$u_l(t) = \frac{A_c a}{2}\cos[2\pi(f_c - f_m)t]$$

Frequency Domain Representation (Using Delta Functions)

From time-domain result:

$$u(t) = \frac{A_c a}{2}\cos[2\pi(f_c - f_m)t] + \frac{A_c a}{2}\cos[2\pi(f_c + f_m)t]$$

Using Fourier transform property:

$$\cos(2\pi f_0 t) \overset{\mathcal{F}}{\longleftrightarrow} \frac{1}{2}\left[\delta(f - f_0) + \delta(f + f_0)\right]$$

Therefore,

$$U(f) = \frac{A_c a}{4}\Big[\delta(f - f_c + f_m) + \delta(f + f_c - f_m)\Big]$$

$$+\frac{A_c a}{4}\Big[\delta(f - f_c - f_m) + \delta(f + f_c + f_m)\Big]$$

Spectrum of DSB-SC Signal

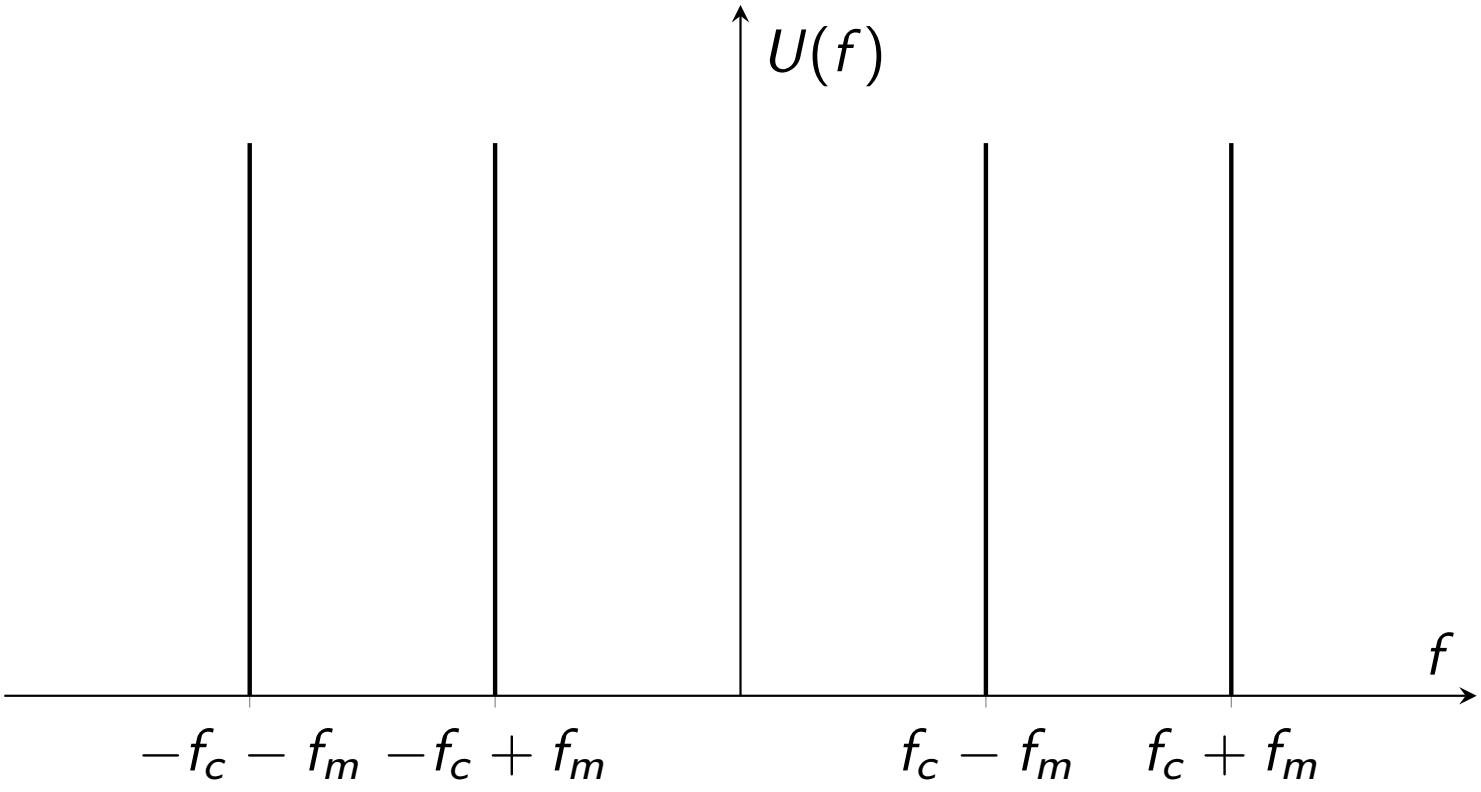

$$\text{Amplitude of each spectral line} = \frac{A_c a}{4}$$

Problem 3: Power in DSB-SC Signal

Given:

$$m(t) = a\cos(2\pi f_m t)$$

Power in message signal:

$$P_m = \frac{a^2}{2}$$

Power in modulated signal:

$$P_u = \frac{A_c^2}{2} P_m = \frac{A_c^2 a^2}{4}$$

Power in each sideband:

$$P_{us} = P_{ls} = \frac{A_c^2 a^2}{8}$$

Summary

- Modulation enables modern wireless communication.
- AM is simplest analog modulation scheme.
- Cellular and MIMO systems rely on high-frequency carriers.
- Square-law and switching modulators generate AM.
- Envelope detector enables simple demodulation.