PREEYANSH ARORA MAJOKA

PROJECT PORTFOLIO

MECHANICAL DESIGN ENGINEER

preeyansh5@gmail.com

ARTMS-RADIOISOTOPE TARGET ELECTRODEPOSITION SYSTEM

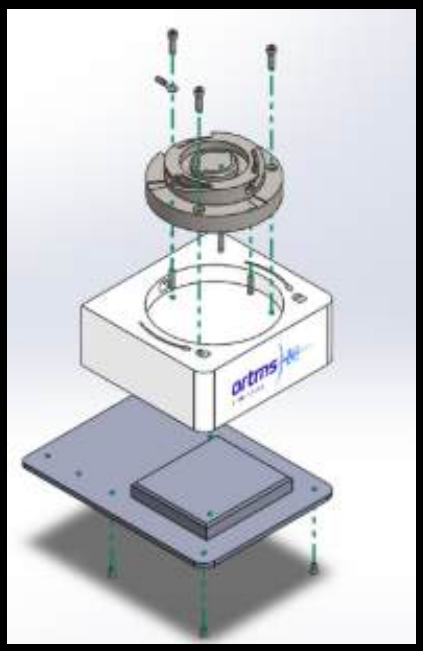

CHALLENGE

- Design & manufacture a device that controls electroplating rates for ARTMS Radioisotope Targets
- Conducted a **needs analysis** to begin the design cycle

APPROACH

- Used **SolidWorks** to design prototype and route harnesses
- Applied **GD&T** on all drawings
- **3D Printed** and assembled prototype for bench testing

IMPACT

- Design achieved its purpose, displayed voltage and current readings with **97%** accuracy
- Successfully released product within **8 months**

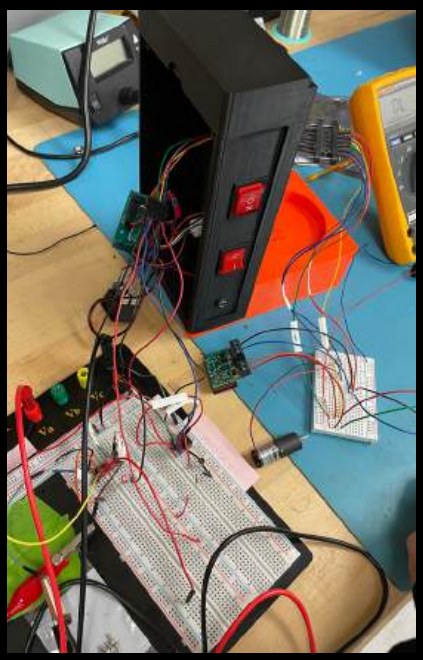

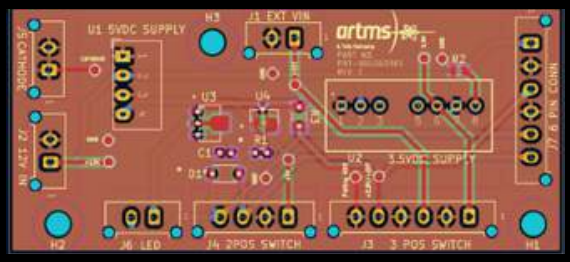

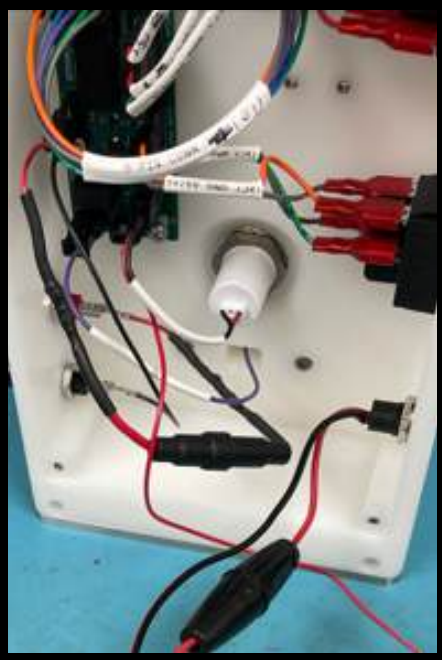

CHALLENGE

- Design a constant-voltage circuit and reduce harnesses for improved **DFA**
- Conducted circuit prototyping using **breadboard** and **perfboard**

APPROACH

- Used **KiCad** to create schematics and design PCB
- Applied **IPC-2221** standards
- **Soldered** PCB and executed board bring up and validation

IMPACT

- Minimal and cleaner harness routing, reduced assembly time by **2 hours**
- Protected **$1M+** in yearly manufactured assets from quality-related losses

ARTMS-IRRADIATION SYSTEM FOR SIEMENS ECLIPSE CYCLOTRON

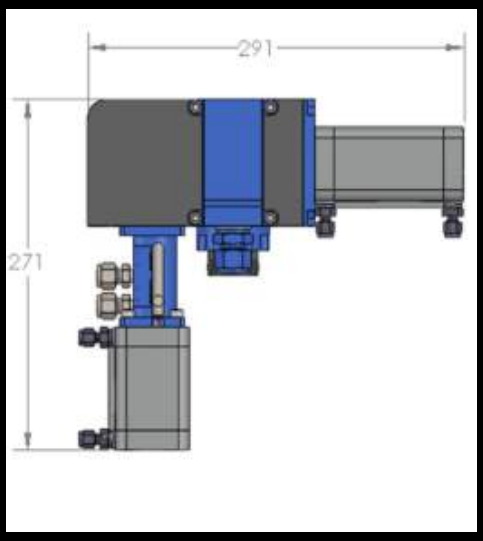

CHALLENGE

- Design & miniaturize ARTMS irradiation system for increasing compatibility with Siemens Eclipse cyclotron
- Conducted a **needs analysis** prior to design cycle

APPROACH

- Defined spatial constraints using Polycam site scans
- Modeled parts and full assembly in **SolidWorks**
- **3D Printed** and assembled prototype for demonstration

IMPACT

- Achieved **70%** volumetric reduction
- Future-proofed the design by sourcing and documenting space-optimized component alternatives

HEXAGON PURUS: AUX MODULE STRUCTURAL BRACKET REDESIGN

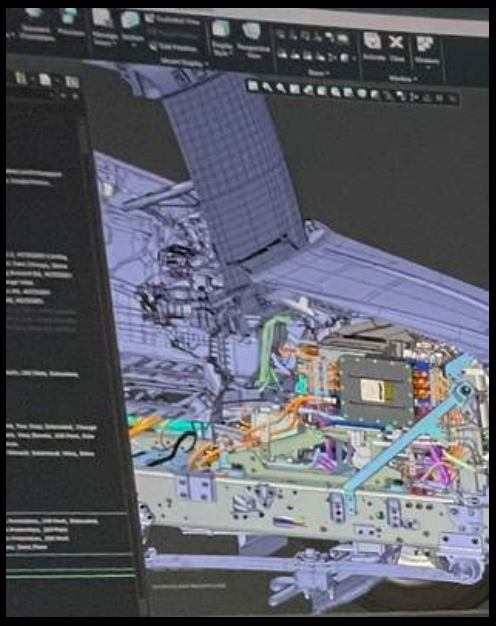

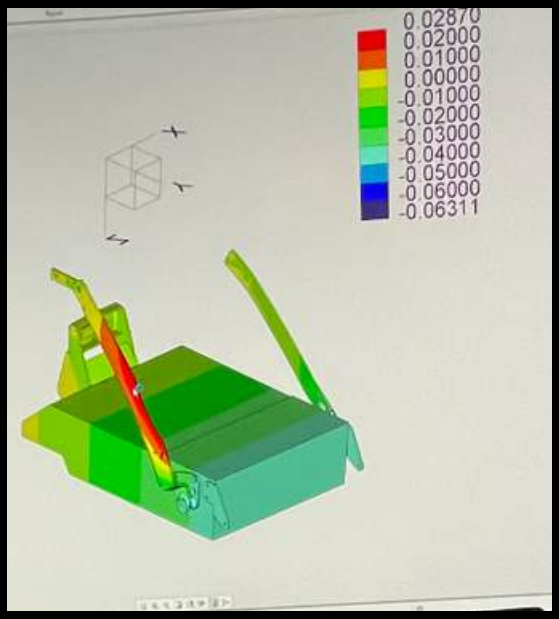

CHALLENGE

- Design a chassis-to-module structural mount while navigating severe packaging constraints, brake line interference, and address current tooling access deficiencies

APPROACH

- Used **Creo** to design and simulate the side-brace structural bracket
- Redefined subassembly
- Applied **3G loading conditions** to verify FEA static and modal performance

IMPACT

- Improved tooling clearances and consolidated hardware, achieving a **30%** reduction in unique fasteners
- Retained **98%** structural performance while maximizing stiffness-to-weight via targeted gussets and flanges performance

OKMOTORRAD: MVP, CHASSIS DESIGN & TOP-LEVEL ASSEMBLY

CHALLENGE

- Build a minimum viable electric motorbike prototype with **$0** in funding to attract School of Engineering and external sponsors
- Limited time, project was constrained to **3 months**

APPROACH

- Repurposed a scrap dirt bike chassis and BLDC motor kit
- Bench-tested functionality with a **60V** power supply
- Modeled and **3D printed** mounting brackets in **SolidWorks**

IMPACT

- Successfully secured **8** external sponsors in **3 months**, recruited **20+** members
- Accelerated competition development by **2 months** via MVP roadmapping

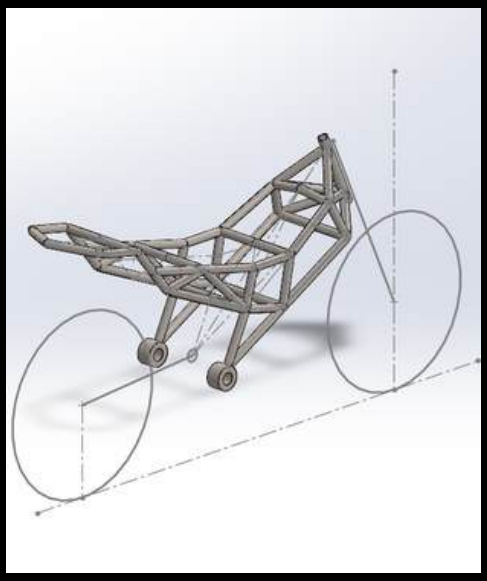

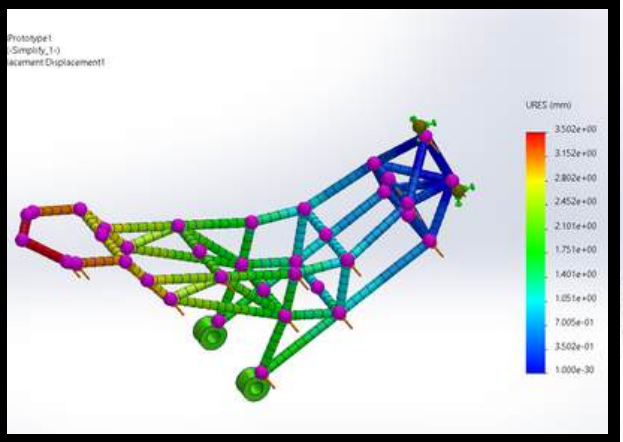

CHALLENGE

- Design a motorbike chassis applying MotoStudent Competition constraints
- Build Master Assembly for Competition bike and validating integration
- Conducted thorough regulations review

APPROACH

- Used **SolidWorks Weldments** for designing trellis frame
- Created Top Level Heavy and Lightweight assemblies
- Conducted **FEA** for structural performance evaluation at **250kg** saddle and **300kg** front loading

IMPACT

- Accomplished **60%** of total design, allowing to focus on simulations-based iterations
- Established main frame topology, providing strict spatial constraints that accelerated subassembly integration

CAPSTONE: TEST RIG DESIGN & CAPSULE TRACKING COUPLER

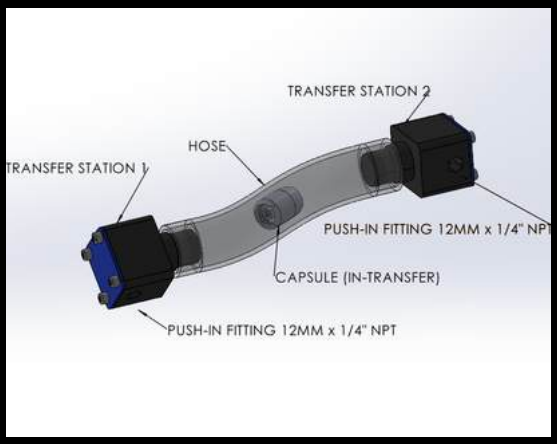

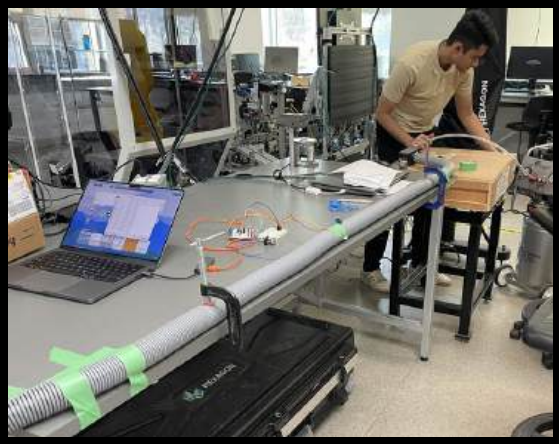

CHALLENGE

- Design and fabricate a fully sealed pneumatic transfer system operating at **80-110 PSI**
- Propel capsule projectiles to simulate cyclotron irradiation cycles for ARTMS radioisotopes

APPROACH

- Modeled system prototype in **SolidWorks** and engineered permanent O-ring face seal integrations to resolve preliminary leak points
- **3D Printed** and assembled final prototype for capsule tracking testing

IMPACT

- Successful test rig allowed for improved data collection, introducing in-hose capsule tracking which previously did not exist in ARTMS Irradiation System

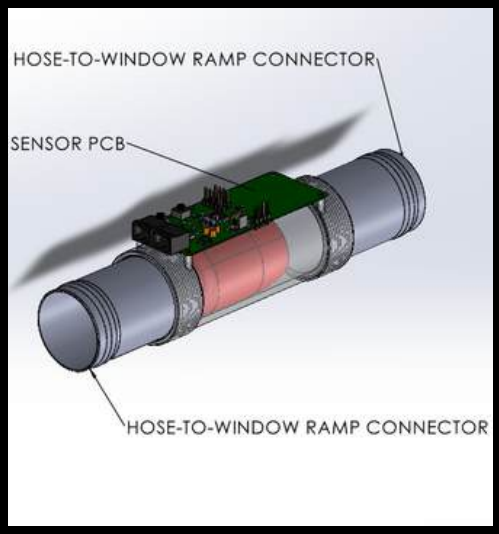

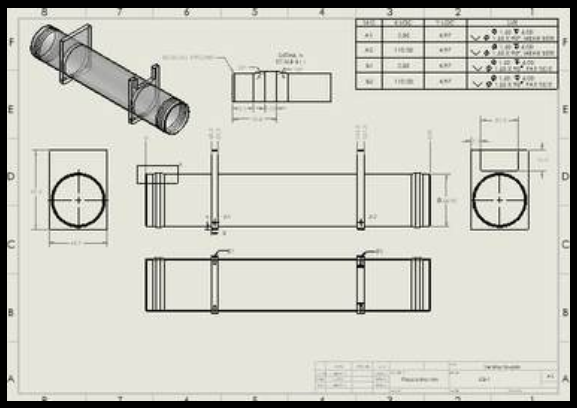

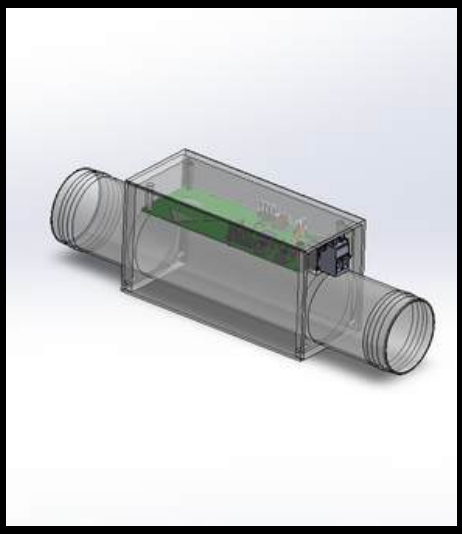

CHALLENGE

- Develop a capsule checkpoint-tracking system for cyclotron facilities, constrained by a strict spatial footprint and the need for materials resistant to ionizing radiation embrittlement
- Conducted a thorough **needs analysis**

APPROACH

- Evaluated material properties and applied **ALARA** safety principles to ensure durability in high-radiation environments radiation
- Designed and iterated couplers on **SolidWorks**
- Validated sensor PCB fit and function using resin **3D-printed** prototypes

IMPACT

- Introduced capsule real-time in-hose tracking to allow client to pinpoint jams
- Decreased overall system downtime by accelerating capsule retrieval speeds by **70%**