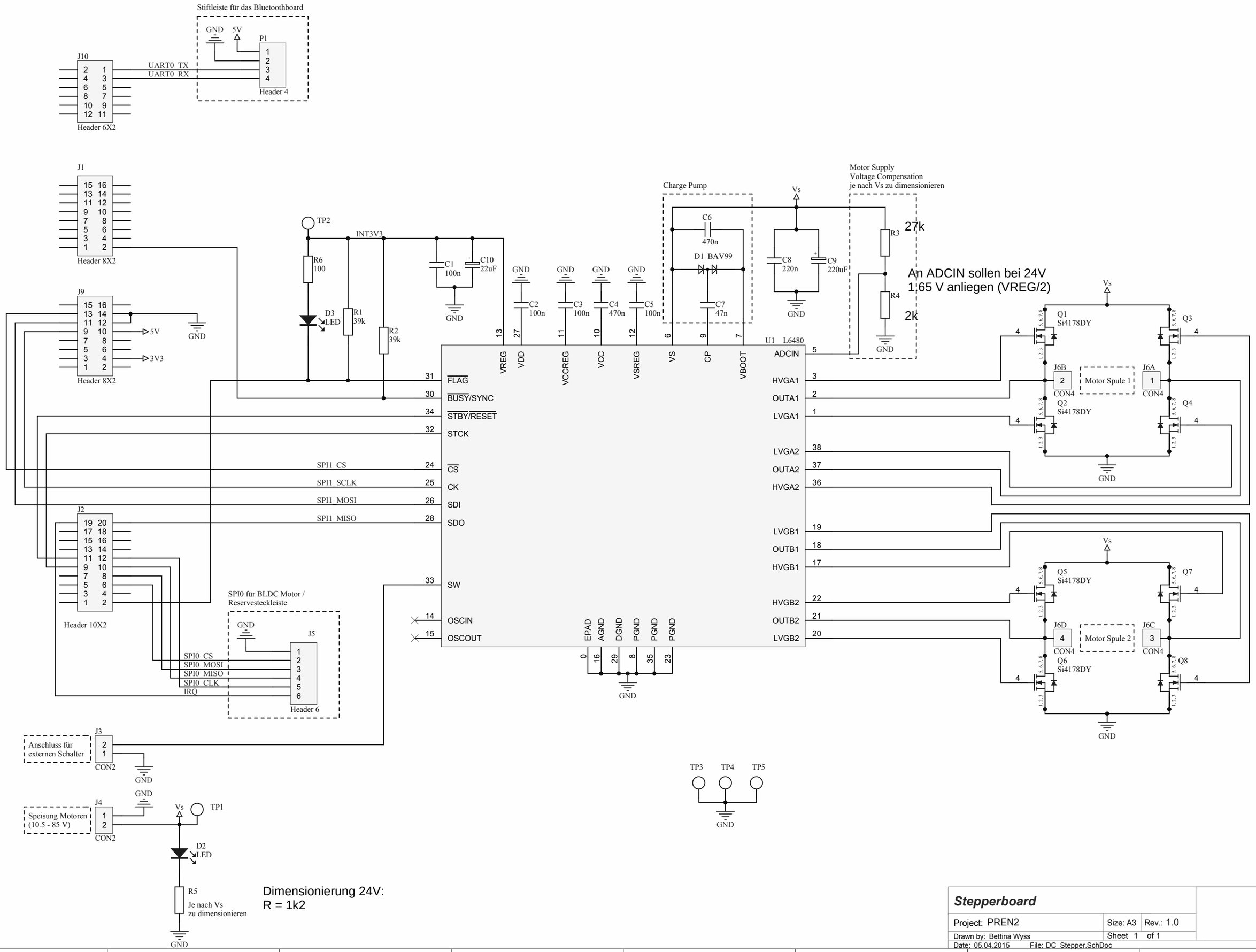

Stepperboard		
Project: PREN2	Size: A3	Rev.: 1.0
Drawn by: Bettina Wyss	Sheet 1 of 1	
Date: 05.04.2015 File: DC_Stepper.SchDoc		