ASIL-B Compliant BriteSafe™ 16-Ch LED Matrix Manager with Integrated Oscillator and Diagnostics

FEATURES

- ASIL-B Compliant
- AEC-Q100 Qualified for Automotive Applications
  - Grade 1: 125°C Ambient Operating Temperature
- 4 Independent Banks of 4 20V-Switches in Series
  - Programmable 10-bit PWM Dimming
  - Synchronizable PWM Period
  - Programmable Slew Rate Control
  - Programmable LED Open and Short Detection
  - LED Open Overvoltage Protection
- Integrated 8-bit ADC Monitoring
  - LED Differential Voltage for Each Switch
  - LED Current Monitor
  - Die Temperature Monitor
  - 2 General Purpose ADC Inputs
  - Internal Voltage Reference
- Single Pin Configurable Fail-Safe Operation
- Integrated Oscillator
- UART Serial Communication
  - CAN Transceiver Compatible
  - 16 Unique Addresses
- Programmable Thermal Warning Threshold

APPLICATIONS

- Automotive LED Headlight Assembly
- Adaptive Driving Beam Control
- Animated Turn and Daytime Running Light

DESCRIPTION

The ID803 is a BriteSafe™ flexible 16-switch matrix LED bypass switching device that dynamically controls and monitors up to four independent LED string banks with 4 series switches per bank, capable of managing up to 16.5V of LEDs in series per switch. Independent LED strings enable the ID803 to manage configurations with either single or multiple current source inputs. The ID803 is designed specifically for automotive lighting systems requiring functional safety.

The ID803 features an internal ±2.5% frequency stable oscillator. PWM periods, duty cycles, and phase shift are programmable per switch with their periods synchronizable with other ID803 devices or through the UART. An integrated 8-bit ADC with multiplexed inputs monitors the voltage across each of the 16 switches, die temperature, two external ADC pins, internal voltage reference, and the LED current sense with adjustable gain. Safety features include programmable open and short detection, open over-voltage protection, programmable thermal warning, configurable thermal limit response, and configurable fail-safe operation. Communication through a multi-drop UART serial interface is addressable through 4 address pins.

The ID803 is available in a thermally-enhanced 48-pin 7mm × 7mm E-LQFP package with an exposed pad.

TYPICAL APPLICATION

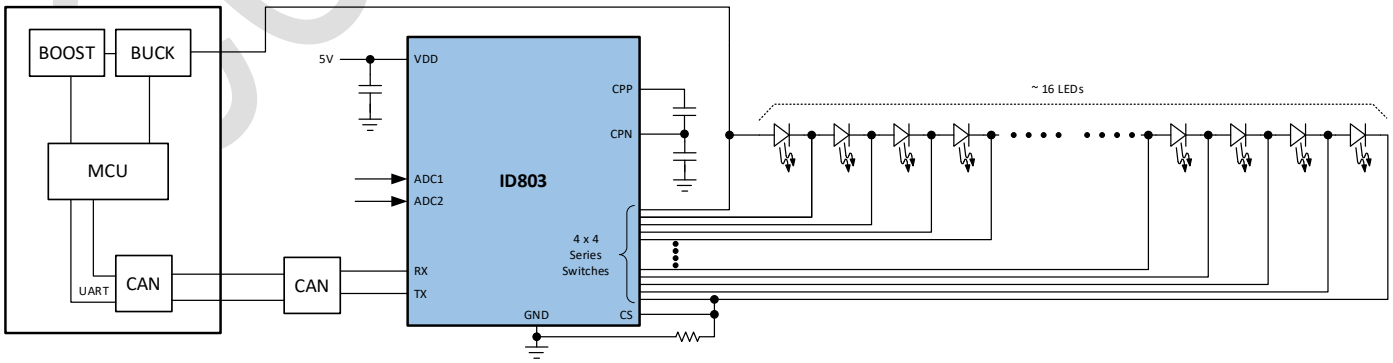

Simplified Application

CONFIDENTIAL

Table of Contents

FEATURES....1
APPLICATIONS....1
DESCRIPTION....1
TYPICAL APPLICATION....1
ORDERING INFORMATION....3
SPECIFICATIONS....3
Absolute Maximum Ratings (NOTE1)....3
Recommended Operating Conditions....3
Thermal information....4
Electrical Characteristics....4
PIN FUNCTIONS....6
TYPICAL CHARACTERISTICS....8
BLOCK DIAGRAM....9
OPERATION....10
Overview....10
Internal Oscillator and Clock....10
System Clock....10
Charge Pump Clock....10
PWM Clock....10
PWM Dimming....10
Width – Switch Off-Time....11
Phase – Switch On/Off Phase Shift....11
Parallel Switch Options....11
Switch Slew Rate Control....11
LED Fault Detection and Protection....12
LED Open Detection....12
LED Short Detection....12
Resistive FET Detection....12
LEDx Switch Voltage Detection....12
Driver Health Check....12
Analog Digital Conversion (ADC)....13
UART Interface....14
UART Physical Layer....14
UART Communications Protocol....15
Transaction Frame Description....16
UART Errors....17
Communications Watchdog Timer....17
Device Functional Modes....17
Faults and Diagnostics....18
Registers....20
Configuration Register....24
Output Control Register....24
Thermal Warning Limit Register....25
Slew Rate Registers....25
System Configuration Register....25
Communication Watchdog Timer Register....26
PWM Dimming Frequency Register....26
Open Threshold Register....26
Set LED Off Registers....26
Individual LED Mapped Phase Registers....27
Individual LED Mapped Pulse Width Registers....27
Bank Mapped Phase Registers....28
Bank Mapped Pulse Width Registers....28
LED ON-time ADC Threshold Registers....29
ADC Reference selection register....30
Software SYNC Register....30
Status Registers....30
ADC Registers....32
CERRCNT Registers....32
FLT_OPEN_OR_DRV Registers....32
FLT_SHORT Registers....32
FLT_RESFET Registers....32
FLT_MATRIX_POR Registers....33
FLT_LEDON Registers....33
PWM_MISCOUNT Registers....33
VLEDON Registers....33
VLEDOFF Registers....34
UART_CONFIG Register....34
PASSCODE Register....34
BAD_PASSCODE_CNT Register....34
ICID Registers....34
APPLICATION INFORMATION....35
LAYOUT GUIDELINE....36
PACKAGE OUTLINE DRAWING....37
REVISION HISTORY....38

CONFIDENTIAL

ORDERING INFORMATION

PART NUMBER	PART MARKING	FINISH CODE	PAD FINISH	PACKAGE TYPE	MSL RATING
ID803	ID803	TBD	Cu NiPdAu	E-LQFP48	3

SPECIFICATIONS

ABSOLUTE MAXIMUM RATINGS (NOTE1)

		MIN	MAX	UNIT
Voltage	VDD, VDDO to GND	-0.3	6	V
	CPP-CPN	-0.3	13	V
	CPP to GND	-0.3	75	V
	CPN to GND	-0.3	62	V
	LED[1,5,9,13]A, LED[1,5,9,13]K, LED[2–4,6–8,10–12,14–16] to GND	-0.3	62	V
	LED1A–LED1K, LED2–LED1A, LED3–LED2, LED4–LED3, LED5A–LED5K, LED6–LED5A, LED7–LED6, LED8–LED7, LED9A–LED9K, LED10–LED9A, LED11–LED10, LED12–LED11, LED13A–LED13K, LED14–LED13A, LED15–LED14, LED16–LED15	-0.3	25	V
	CS to GND	-0.3	62	V
	ADC1, ADC2 to GND	-0.3	6	V
	ADDR0, ADDR1, ADDR2, ADDR3 to GND	-0.3	6	V
	FS, RX, CLK_SEL to GND	-0.3	6	V
	SYNC, TX to GND	-0.3	VDD+0.3	V
Storage Temperature		-40	150	°C
Reflow Temperature			260	°C
ESD	HBM (Human Body Model) per AEC Q100-002		±2000	V
	CDM (Charged Device Model) per AEC Q100-011		±750	V

***Note 1**. Stresses beyond those listed under Absolute Maximum Ratings may cause permanent damage to the device. Exposure to any Absolute Maximum Rating condition for extended periods may affect device reliability and lifetime.*

RECOMMENDED OPERATING CONDITIONS

SYMBOL	PARAMETER	MIN	MAX	UNIT
VDD	VDD Supply voltage range	4.5	5.5	V
V_{LEDX}	LED switch common mode voltage range	0	60	V
V_{LEDx} to V_{LEDX-1}	LED switch differential voltage range	1.5	16.5	V
I_{LED_DC}	Switch continuous current NOTE2		1.5	A
I_{LED_PULSE}	Switch pulse current, pulse duration = 20us, frequency = 400Hz NOTE2		10	A
t_{SYNC}	SYNC input pulse width	$2/f_{CLK}$		s
t_{r_RX}	Maximum rise time of RX		$3/f_{CLK}$	s
t_{f_RX}	Maximum fall time of RX		$3/f_{CLK}$	s
V_{ADCx}	ADC full scale voltage reference		VDD	V
V_{CS}	Current sense voltage (CSGAIN = 0b, 1x Gain)		2	V

CONFIDENTIAL

SYMBOL	PARAMETER	MIN	MAX	UNIT
V_{CS}	Current sense voltage (CSGAIN = 1b, 10x Gain)		200	mV
C_{CP}	Charge pump capacitor	0.1		µF
C_{VDD}	VDD Decoupling capacitor	0.1		µF
T_A	Operating ambient temperature	-40	125	°C
T_J	Operating junction temperature	-40	150	°C

Note 2. *LEDx Maximum Current Continuous and Pulsed are not tested, but are guaranteed by design limited by the thermal performance of the system.*

THERMAL INFORMATION

SYMBOL	THERMAL METRIC		UNIT
$R_{\theta JA}$	Junction to Ambient thermal resistance (NOTE1)	23.3 (TBD)	°C/W
$R_{\theta JC(TOP)}$	Junction to Case(Top) thermal resistance	14.9 (TBD)	
$R_{\theta JB}$	Junction to Board thermal resistance	7.2 (TBD)	
$R_{\theta JC(BOT)}$	Junction to Case(BOT) thermal resistance	1.2 (TBD)	

ELECTRICAL CHARACTERISTICS

Specifications apply over the junction temperature range of –40°C to 150°C. V_{VDD} = 5V, C_{RX}, C_{TX}, C_{SYNC} = 20pF unless otherwise noted.

SYMBOL	PARAMETER	CONDITIONS	MIN	TYP	MAX	UNIT
VDD Supply						
V_{VDD-UV}	VDD UVLO Threshold	Falling Rising Hysteresis	3.8	3.92 0.1	4.05	V V
V_{VDD-OV}	VDD OVLO Threshold	Rising Falling Hysteresis	5.63	5.77 0.3	5.90	V V
I_{VDD-OP}	VDD Operating Current	V_{LEDx} = 0V V_{LEDx} = 10V		9 7	11	mA mA
Charge Pump						
V_{CP}	Charge Pump Voltage	$V_{CPP} - V_{CPN}$	TBD	TBD	13	V
V_{CPTH-F} V_{CPTH-R}	Charge Pump Error Threshold Voltage	Falling, CHPMP_ERR Bit Set Rising, CHPMP_ERR Bit Cleared	4.5 5.2	4.7 5.4	4.9 5.6	V V
t_{CP_GF}	Charge Pump Error Glitch Filter	$V_{CPN} = V_{VDD}$, $V_{CPP} - V_{CPN} < 4.25V$		50		µs
f_{CP}	Charge Pump Frequency			8		MHz
I_{CP-SRC}	Charge Pump Current from LED Source	$V_{LED4} = V_{LED8} = V_{LED12} = V_{LED16} = 20V$		3	5	mA
I_{CP-LIM}	Charge Pump Current limit	V_{CPN} = 0V	13	30	46	mA
LED Bypass Switches						
$R_{SW(ON)}$	LEDx Switch On-Resistance	I_{LED} = 1.5A		140		mΩ
$R_{SW(ONBANK)}$	Single-Bank 4 Switches in Series On-Resistance	$I_{LED-BANK}$ = 100mA		400	750	mΩ
$I_{SW(LK)}$	LEDx Switch Off Leakage Current	V_{LEDx} = 18V, $V_{LED(x-1)}$ = 0V V_{CPN} = 20V, VDD = 0V	55	72	103	µA
$V_{TH-SHORT}$	LEDx Short Detection Threshold	Falling Threshold Hysteresis	0.42	 0.5	1.36	V V
$V_{TH-OPEN}$	LEDx Open Detection Threshold Voltage	OPENTHx = 2'b00 OPENTHx = 2'b01 OPENTHx = 2'b10 OPENTHx = 2'b11	4.2 8.5 12.7 17.0	4.5 9.0 13.5 18.0	4.8 9.5 14.3 19.0	V V V V
$V_{LED-CLAMP}$	LEDx Clamp Voltage	I_{LED} = 10mA	19		24	V

CONFIDENTIAL

Specifications apply over the junction temperature range of –40°C to 150°C. V_{VDD} = 5V, C_{RX}, C_{TX}, C_{SYNC} = 20pF unless otherwise noted.

SYMBOL	PARAMETER	CONDITIONS	MIN	TYP	MAX	UNIT
SR_{000}	LEDx Rising/Falling Slew Rate	SLEWx = 3'b000	TBD	7.5	TBD	mV/µs
SR_{001}		SLEWx = 3'b001	TBD	15	TBD	mV/µs
SR_{010}		SLEWx = 3'b010	TBD	30	TBD	mV/µs
SR_{011}		SLEWx = 3'b011	TBD	60	TBD	mV/µs
SR_{100}		SLEWx = 3'b100	TBD	120	TBD	mV/µs
SR_{101}		SLEWx = 3'b101	TBD	240	TBD	mV/µs
SR_{110}		SLEWx = 3'b110	TBD	480	TBD	mV/µs
SR_{111}		SLEWx = 3'b111	TBD	960	TBD	mV/µs
Oscillator						
f_{OSC}	Internal Oscillator Frequency		15.6	16	16.4	MHz
$t_{OSC\text{-}INT\text{-}WD}$	Internal Oscillator Watchdog Timer		0.66	1.45	2.48	µs
Digital I/O						
V_{OH}	Output Pin High Level Voltage (TX, SYNC)	TX_STR = SYNC_STR = 1, I_{SINK} = 2mA	VDD–0.3		VDD	V
		TX_STR = SYNC_STR = 0, I_{SINK} = 2mA	VDD–1.2		VDD	V
V_{OL}	Output Pin Low Level Voltage (TX, SYNC)	TX_STR = SYNC_STR = 1, I_{SOURCE} = 2mA	0		0.3	V
		TX_STR = SYNC_STR = 0, I_{SOURCE} = 2mA	0		1.2	V
$I_{SC\text{-}HS}$	Output Pin Short Circuit Current (TX, SYNC)	TX_STR = SYNC_STR = 1, V_{PIN} = 0V & 5.5V		45	70	mA
$I_{SC\text{-}LS}$	V_{VDD} = 5.5V	TX_STR = SYNC_STR = 0, V_{PIN} = 0V & 5.5V		9	16	mA
I_{LK}	Input Pin Leakage (SYNC, RX)	V_{VDD} = 5.5V, V_{PIN} = 0V – 5.5V	–0.5		0.5	µA
$V_{IH\text{-}MIN}$	Input Pin Logic Level Voltage (FS, SYNC, RX, ADDR0,	Minimum Logic High Level Voltage	2.06		VDD	V
$V_{IL\text{-}MAX}$	ADDR1, ADDR2, ADDR3, CLK_SEL)	Maximum Logic Low Level Voltage	0		0.65	V
Resistance Paths						
R_{PASS1}	Resistance Between SYNC, RX and TX Pins			6	20	Ω
R_{PASS2}	Resistance Between VDD and VDDO Pins			0.2		Ω
R_{ADDRx}	ADDRx Internal Pull-up Resistance			200		kΩ
R_{FS}	FS Internal Pull-down Resistance			200		kΩ
R_{CLK_SEL}	CLK_SEL Internal Pull-up Resistance			200		kΩ
R_{SYNC}	SYNC Internal Pull-down Resistance			500		kΩ
ADC						
t_{ADC}	ADC Conversion Time			20		µs
$V_{ADC\text{-}REF}$	ADC reference voltage	Internal reference voltage	1.96	2.0	2.04	V
$V_{ADC\text{-}RNG}$	Effective Full Scale ADC Input Range	ADC1, ADC2, CS	0		VDD	V
		BGR	0		2	V
		VLEDONx, VLEDOFFx	0		20	V
		DIETEMP	-50		180	°C
ADC_{INL}	Integral Non-linearity		-2		2	LSB
ADC_{DNL}	Differential Non-linearity		-1		1	LSB
V_{CS1}	8-bit CS pin ADC Value, 1x Gain	V_{CS} = 200mV, CSGAIN = 0	9	11	12	count
V_{CS10}	8-bit CS pin ADC Value, 10x Gain	V_{CS} = 200mV, CSGAIN = 1	99	102	105	count
V_{BGR}	8-bit valid BGR ADC value range		150	160	170	count
V_{ADC1}	8-bit ADC1 pin ADC Value	V_{ADC1} = 2.5V, VDD = 5V	120	127	134	count
V_{ADC2}	8-bit ADC2 pin ADC Value	V_{ADC2} = 2.5V, VDD = 5V	120	127	134	count
V_{LED}	Differential Voltage Across LED ADC Measurement	$V_{LEDx} – V_{LEDx\text{-}1}$ = 3V	2.8	3.0	3.2	V
		$V_{LEDx} – V_{LEDx\text{-}1}$ = 1.8V	1.65	1.8	2.05	V

CONFIDENTIAL

PIN FUNCTIONS

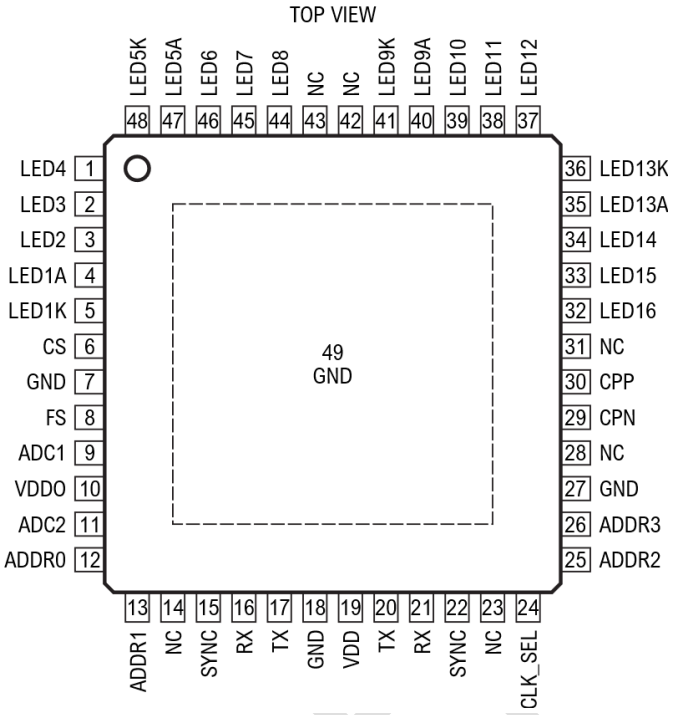

48-LEAD (7mm × 7mm) E-LQFP
EXPOSED PAD (PIN 49) IS GND AND MUST BE SOLDERED TO PCB

VDD (Pin 19): Supply Input. This pin requires local capacitor bypassing to GND. Decouple with one 100nF and one 10nF ceramic capacitor in parallel.

VDDO (Pin 10): VDD Output. Internally connected to the VDD pin for supplying devices that are connected to the general purpose ADC1, ADC2, FS and ADDRx pins. Do not supply the ID803 through this pin. Do not attach any active devices to this pin.

CPP (Pin 30): Charge Pump Positive Terminal. Connect to the top of a 100nF capacitor.

CPN (Pin 29): Charge Pump Negative Terminal, the pin that terminates the 100nF capacitor tied to CPP. Connect an additional 100nF capacitor to GND for local bypassing.

LED1K, LED1A, LED2, LED3, LED4 (Pins 5,4,3,2,1): Bank 1 of 4 Series Switches for Monitoring and PWM control of an LED string. Connect the cathode of the LED string to LED1K. Connect LED1A to the anode of the first LED or series of LEDs to be managed. Connect LED2 to the anode of the second LED or series of LEDs to be managed. Connect LED3 to the anode of the third LED or series of LEDs to be managed. Connect LED4 to the anode of the fourth LED or series of LEDs to be managed. Connect the supply driving the LED string to LED4. Connect the return shunting the LED string current to LED1K. Short adjacent LED pins if not used.

LED5K, LED5A, LED6, LED7, LED8 (Pins 48,47,46,45,44): Bank 2 of 4 Series Switches for Monitoring and PWM control of an LED string. Connect the cathode of the LED string to LED5K. Connect LED5A to the anode of the first LED or series of LEDs to be managed. Connect LED6 to the anode of the second LED or series of LEDs to be managed. Connect LED7 to the anode of the third LED or series of LEDs to be managed. Connect LED8 to the anode of the fourth LED or series of LEDs to be managed. Connect the supply driving the LED string to LED8. Connect the return shunting the LED string current to LED5K. Short adjacent LED pins if not used.

LED9K, LED9A, LED10, LED11, LED12 (Pins 41,40,39,38,37): Bank 3 of 4 Series Switches for Monitoring and PWM control of an LED string. Connect

CONFIDENTIAL

the cathode of the LED string to LED9K. Connect LED9A to the anode of the first LED or series of LEDs to be managed. Connect LED10 to the anode of the second LED or series of LEDs to be managed. Connect LED11 to the anode of the third LED or series of LEDs to be managed. Connect LED12 to the anode of the fourth LED or series of LEDs to be managed. Connect the supply driving the LED string to LED12. Connect the return shunting the LED string current to LED9K. Short adjacent LED pins if not used.

LED13K, LED13A, LED14, LED15, LED16 (Pins 36,35,34,33,32): Bank 4 of 4 Series Switches for Monitoring and PWM control of an LED string. Connect the cathode of the LED string to LED13K. Connect LED13A to the anode of the first LED or series of LEDs to be managed. Connect LED14 to the anode of the second LED or series of LEDs to be managed. Connect LED15 to the anode of the third LED or series of LEDs to be managed. Connect LED16 to the anode of the fourth LED or series of LEDs to be managed. Connect the supply driving the LED string to LED16. Connect the return shunting the LED string current to LED13K. Short adjacent LED pins if not used.

CS (Pin 6): Current Sense Input. Connect to LED1K with a sense resistor to GND for current measurement. Float this pin when unused.

FS (Pin 8): Fail-Safe Configuration Pin. The ID803 enters fail-safe when the configurable communication watchdog timer expires. The state of this pin defines the state of the switches during fail-safe operating mode. A logic low state sets all switches to be open (OFF) in fail-safe mode. A logic high state sets all switches to be closed (ON) in fail-safe mode. An internal typical 200kΩ pull-down resistor sets a logic low state when this pin is floating.

SYNC (Pins 15,22): PWM Period Synchronization Pin. This pin is configurable to be the synchronization source or the receiver of synchronization which is configurable through OUTCTRL(0x01) register. Connect to the SYNC pin on other ID803 devices for PWM synchronization. An internal typical 500kΩ pull-down resistor sets a logic low state when this pin is floating. The two SYNC pins are internally connected to allow for ease of PCB layout in connecting additional ID803 devices.

RX (Pins 16,21): UART Receive Data Input. Connect to RX of the CAN transceiver or UART and to the RX pin of additional ID803 devices. The two RX pins are internally connected to allow for ease of PCB layout in connecting additional ID803 devices.

TX (Pins 17,20): UART Transmit Data Output. Connect to TX of the CAN transceiver or UART and to the TX pin of additional ID803 devices. The two TX pins are internally connected to allow for ease of PCB layout in connecting additional ID803 devices.

ADDR0, ADDR1, ADDR2, ADDR3 (Pins 12,13,25,26): Device Address Configuration Pins. ADDR3 is the MSB and ADDR0 is the LSB. Tie to GND for logic low. An internal typical 200kΩ pull-up resistor sets a logic high state when this pin is floating.

ADC1, ADC2 (Pins 9,11): General Purpose ADC Input Pins. If unused, tie to GND through no more than 100k and no less than 10k of resistance.

CLK_SEL (Pin 24): System Clock Selection Pin. A logic low state selects 8MHz system clock operation (500kHz UART baud rate). A logic high state selects 16MHz system clock operation (1MHz UART baud rate). An internal typical 200kΩ pull-up resistor sets a logic high state when this pin is floating.

GND (Pins 7,18,27, Exposed Pad 49): Supply Ground. Tie this pin to ground plane on the top-layer of the PCB. The local bypass capacitor from VDD should be terminated to this plane.

CONFIDENTIAL

TYPICAL CHARACTERISTICS

Figure 1 VDD Operating current vs Temperature	Figure 2 VDD UVLO vs Temperature
To be updated Figure 3 VDD OVP vs Temperature	Figure 4 LEDx Overvoltage Threshold vs Temperature
Figure 5 Switch ON-Resistance vs Temperature	Figure 6 Oscillator frequency vs Temperature

CONFIDENTIAL

BLOCK DIAGRAM

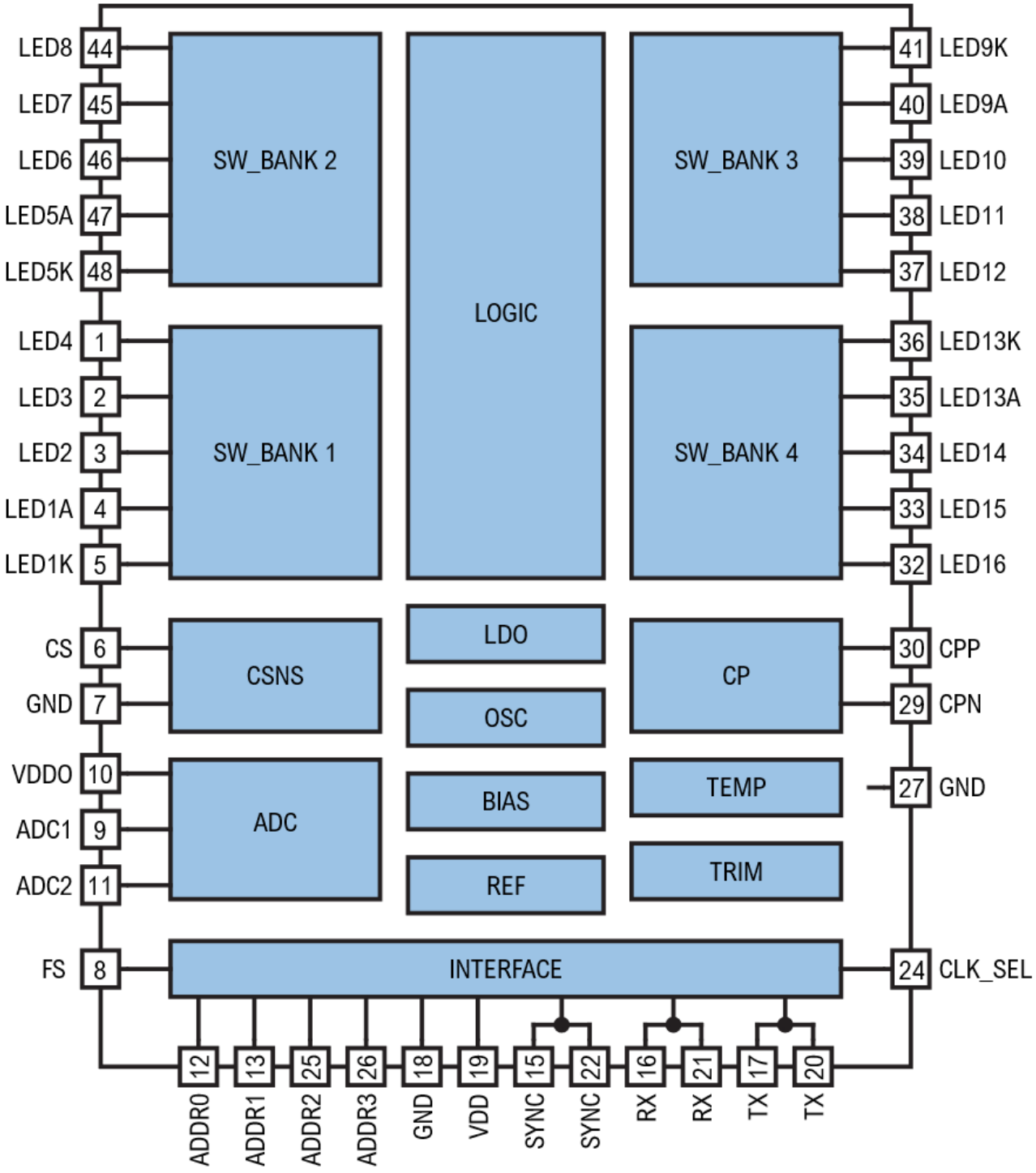

OPERATION

OVERVIEW

The ID803 is a 16 channel LED bypass switching device designed for dimming LEDs in a string supplied by a common LED driver current source. The ID803 was designed specifically for automotive LED lighting systems as each channel is capable of being independently programmed to bypass an LED or LED string. The ID803 uses 16 individually controlled floating source N-channel 20V MOSFET switches allowing up to 4 LEDs to be bypassed per channel. The ID803 configures 4 banks, each with 4 channels where 4 NMOS switches are connected in series. Each bank can tolerate up to 62V to GND and can be programmed to operate in parallel with other banks for greater current capability.

Each channel consists of a 20V NMOS switch, gate driver, analog open and short detection, over-voltage protection, slew rate control, and diagnostics for self-test. All channels are pulse-width modulated (PWM) at a programmed frequency and each channel is capable of being individually programmed for duty cycle, and phase-shift.

The ID803 provides multi-drop UART communications with support for up to 16 total ID803s and support for a CAN physical layer. Through the UART interface, the ID803 is capable of being programmed and sending fault and diagnostic when connected to a host microcontroller unit (MCU). The ID803 includes an integrated 16MHz clock to support 8N1 UART framing for either 1Mbit or 500kbit baud rate communication.

The ID803 includes an on-die 8bit ADC and two ADC pin inputs for general purpose use. The ADC is also used for internal measurements of the bandgap reference, die temperature, and if digitally enabled the differential voltage across each matrix switch, and the current sense pin.

INTERNAL OSCILLATOR AND CLOCK

System Clock

The ID803 has an internal 16MHz oscillator to provide a system clock of either 16MHz or 8MHz. The CLK_SEL pin is tied VDD/GND or left open to select between the two system clock frequencies (16MHz at CLK_SEL = High, 8MHz at CLK_SEL=Low). The CLK_SEL pin is internally tied high for a default system clock frequency of 16MHz. The system clock sets the UART baud rate at a fixed 1/16th of the system clock for either 1Mbit or 500kbit baud rate communication.

Charge Pump Clock

The internal charge pump is supplied by an 8MHz clock regardless of the system clock frequency. This charge pump clock is capable of being spread spectrum modulated and is enabled by default by the CHPMP_SS register bit. The charge pump clock spread spectrum is implemented by a pseudo-random jitter to reduce peak EMI.

PWM Clock

The PWM clock is programmable, derived from the system clock, and is used to drive a 10-bit counter to set the PWM dimming frequency of the matrix switches. The PWM clock is programmed by writing to the PWMTICK register which consists of two sub-registers: PTBASE and PTCNT. The PWMTICK register controls two cascaded dividers with each divider being set by the sub-registers PTBASE and PTCNT. The PWMCLK can be calculated as the system clock divided by both PTBASE and PTCNT.

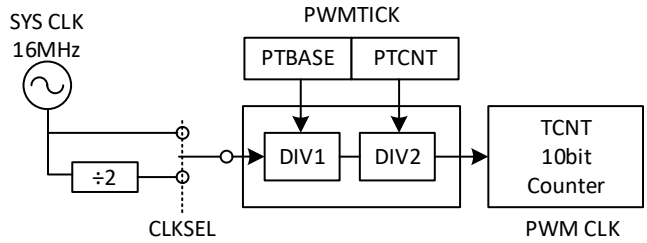

Figure 7 : PWM Clock

PWM DIMMING

The ID803 is capable of 10-bit PWM dimming with phase shifting for each individual switch. the LED on-time (switch off-time) and phase are separately programmed for each switch using the WIDTHx and the PHASEx registers. The PWM dimming period is equal to 2^{10} counts of the programmed PWM clock period. The WIDTHx and PHASEx values are loaded into the PWM control logic at the start of the programmed LED off-time

set by PHASEx, WIDTHx, and PSON. For the case when WIDTHx is programmed for 100% LED on-time, PHASEx alone determines when new WIDTHx and PHASEx values are loaded.

Width – Switch Off-Time

When the WIDTH is programmed to a value between 0 and 1022, the LED on-time (switch off-time) duty cycle is calculated as WIDTH/1024.

When the Width is programmed to the value of 1023, the LED on-time (switch off-time) duty cycle is 100%.

Phase – Switch On/Off Phase Shift

The ID803 is capable of phase shifting in respect to the switch off-time or the switch on-time. A configuration bit PSON in SYSCFG register can be programmed to either a 0b for phase shifting with respect to the switch on-time, or 1b for phase shifting with respect to the switch off-time. The start of the switch on or off time is described below depending on the PSON register value.

PSON = 0b

TCNT at PHASE starts LED off time (Switch on time)
TCNT at PHASE-WIDTH starts LED on time (Switch off time)

PSON = 1b

TCNT at PHASE starts LED on time (Switch off time)
TCNT at PHASE + WIDTH starts LED off time (Switch on time)

Since the counter is continuously running, the calculations from above wrap across the period boundary (1023 to 0 transition).

Refer to Figure 8 and Figure 9 for detailed examples of PWM dimming.

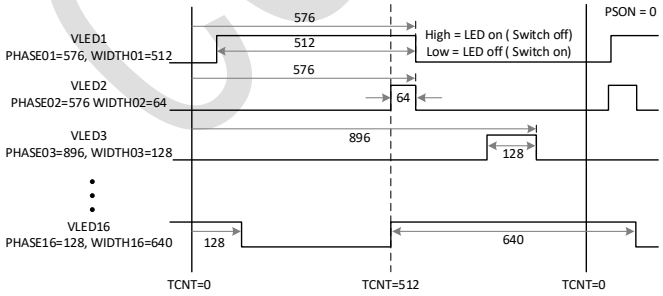

Figure 8 : PWM Diming with PSON=0b

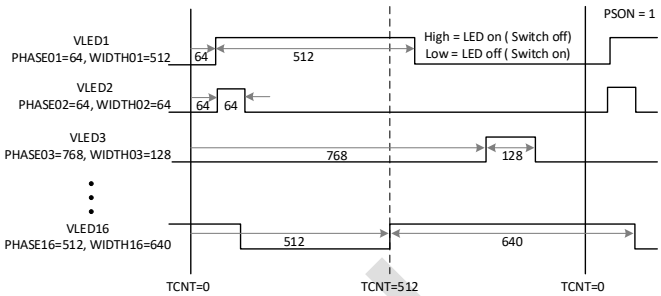

Figure 9 : PWM Dimming with PSON=1b

PARALLEL SWITCH OPTIONS

The ID803 configures 4 banks, each with 4 channels where 4 NMOS switches are connected in series. Each bank can tolerate up to 62V to GND and can be programmed to operate in parallel with other banks for greater current capability. Assuming the external physical parallel connections are made at the LEDx pins, the ID803 can be configured for no parallel banks, one pair of parallel banks, two separate pairs of parallel banks, or all four banks in parallel. This configuration is set by the value of the PARLED bits in the OUTCTRL register.

00 = No Banks in parallel [Default]

01 = Bank 1 || Bank 2

10 = Bank 1 || Bank 2 and Bank 3 || Bank 4

11 = Bank 1 || Bank 2 || Bank 3 || Bank 4

When PARLED is configured for parallel banks, the banks in parallel will share the following settings:

1) PHASE
2) WIDTH
3) SLEW
4) SET_LED_OFF
5) LEDONTH

When a bank is using settings for another bank, the programmed PHASE, WIDTH, SLEW, LEDONTH and SET_LED_OFF settings are ignored and left unmodified.

SWITCH SLEW RATE CONTROL

The turn on and turn off slew rate for each channel switch can be programmed using the SLEW* register. The slew rate is programmed per bank and has 8 slew rate

CONFIDENTIAL

settings. The default slew rate is typically 240mV/us and ranges from 7.5mV/us to 960mV/us.

Figure 10 shows the ideal slew rate.

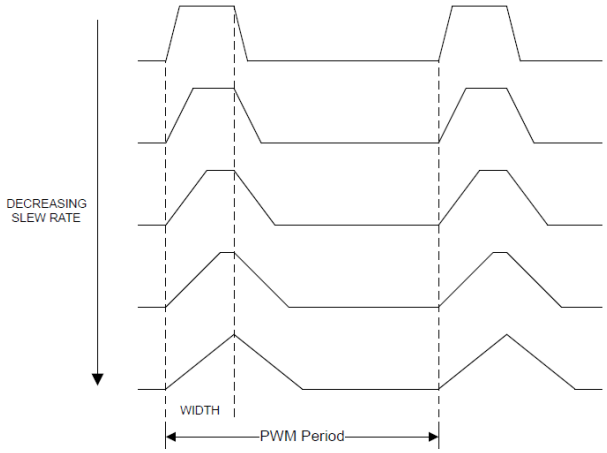

Figure 10 : Slew Rate Diagram

When the ID803 is programmed for smaller switch off times along with slower slew rates, the current waveform through the LEDs changes from trapezoidal to triangular. Past this boundary point, the maximum amplitude of the triangular waveform will decrease causing non-linear dimming performance. Therefore, the slew rate setting must be chosen with the switch's minimum off-time in mind if linear performance is of importance.

LED FAULT DETECTION AND PROTECTION

Each channel in ID803 has dedicated analog circuitry for fault detection, protection, and reporting features shown in Figure 11.

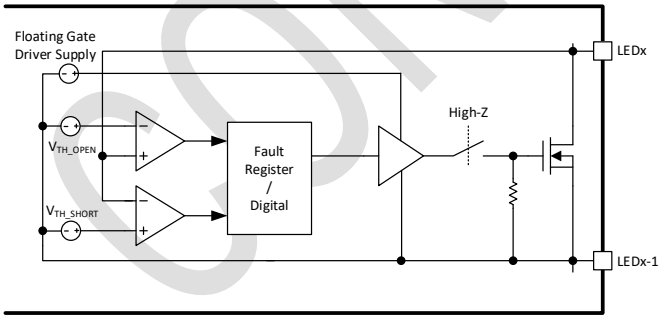

Figure 11 : LED Fault Detection

LED Open Detection

LED Open Detection and Protection is provided by monitoring the drain-to-source voltage of the internal switch. If the differential voltage across the switch exceeds the programmable threshold voltage, the switch is latched on to protect itself and the fault is reported by setting the FLT_OPEN_OR_DRV registers. The switch override state will stay latched until a subsequent switch on event.

In addition to the LED OPEN protection, the ID803 includes an open loop switch over-voltage protection for transients by clamping LEDx voltage to $V_{LED\text{-}CLAMP}$, which may not be seen by the Open Detection comparator.

LED Short Detection

LED Short Detection is provided by monitoring the drain-to-source voltage of the internal switch. If the differential voltage across the switch is below the short threshold voltage right before the end of a switch off pulse. The fault is reported by setting the FAULT_SHORT register.

Resistive FET Detection

Resistive FET Detection is provided by using the same comparator for LED Short detection. If the differential voltage of the internal switch is greater than the LED Short Threshold right before the end of a switch on pulse, then a fault is reported by setting the FLT_RESFET register.

LEDx Switch Voltage Detection

The ID803 is capable of digital LED open and short thresholds via ADC monitoring when the LEDADCEN bit is set. Using the LEDONTH registers, a programmable high and low threshold can be set per switch and then compared to the digitized differential switch voltage stored in the VLEDON register. The comparison occurs at the end of the switch off-time and if the VLEDON value is outside the programmed threshold on any of the 16 switches, the VLED_ERR flag is set in the STATUS2 register. Additionally, a corresponding bit in the FLT_LEDON registers will be set to report which switch triggered the VLED_ERR.

Driver Health Check

In addition to the basic fault detection features, the ID803 provides a driver health check function that can be used to monitor the internal gates of the 16 switches. During Driver health check, the gate drive buffer output is driven high and disconnects the gate of the MOSFET, then check whether the gate driver output is high and the gate of the

CONFIDENTIAL

MOSFET is low. This check is to ensure the gate driver buffer and the connection of the gate pulldown resistors. The Driver health check should be executed in DIAG1, DIAG2 and Normal mode without applying VLED power.

The recommended procedure is as follows.

In DIAG1 and DIAG2 mode

i) Read FAULT_OPEN_OR_DRV registers. All register bits must be low

ii) Set the DRV_CHK bit in the OUTCTRL register to enable health check. (This makes SW_ON High in DIAG1/2)

iii) Wait 2ms

iv) Read FAULT_OPEN_OR_DRV registers. All register bits must be set high. If any are set low, then there is a problem with the internal circuitry

v) Reset DRV_CHK bit in the OUTCTRL register

vi) Read FAULT_OPEN_OR_DRV registers to clear

In Normal mode,

i) Set the DRV_CHK bit in the OUTCTRL register to enable health check.

ii) Read FAULT_OPEN_OR_DRV registers to clear any existing OPEN LED status.

iii) Set WIDTHx = 0 for all switches to command gate input high.

iv) Wait one PWM period time to get all actual WIDTHx is 0

v) Read FAULT_OPEN_OR_DRV registers. All register bits must be set high. If any are set low, then there is a problem with the internal circuitry.

vi) Reset DRV_CHK bit in the OUTCTRL register

vii) Read FAULT_OPEN_OR_DRV registers to clear

ANALOG DIGITAL CONVERSION (ADC)

The ID803 has an internal 8bit ADC shown in Figure 12 which is used to convert analog signals to digital register values. These multiplexed analog inputs include BGR, ADC1, ADC2, CS, DIETEMP, and VLEDx.

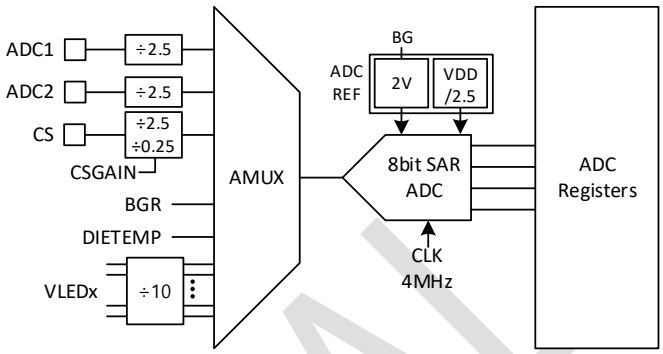

Figure 12 : ID803 ADC diagram

The two general purpose external inputs (ADC1 and ADC2 pins) are always enabled. They can be used for features such as thermal compensation and binning, and so forth.

Each channel conversion takes 80 ADC clock cycles (20us) with 4MHz ADC clock. The ADC of ADC1 and ADC2 pins are referenced to VDD/2.5, therefore, the resistor dividers must be referenced to VDD or VDDO pins. The optional ADC reference can be selected to internal 2V through ADC1REF and ADC2REF bits in ADCREFSEL register (0x80).

The current sense input (CS pin) can be used to measure the LED string current through a ground referenced current sense resistor. By default, this feature is disabled. To enable this feature, the CSEN bit must be set in the SYSCFG register. There are two gain settings (1x and 10x) possible using the CSGAIN bit in the SYSCFG register. The ADC result is updated in CS register (0x89). When CSEN bit is reset, then the CS register is cleared. The ADC reference is programmable, internal 2V or VDD/2.5 through CSREF bit in ADCREFSEL register (0x80).

The die temperature (DIETEMP) is always enabled. The die temperature is sampled and stored in the DIETEMP register (0x8A).

The ID803 has two bandgap references, the primary and secondary. The secondary bandgap reference is used to check whether the primary bandgap reference is normal or not through BGR ADC. The secondary bandgap reference is sampled with the 2V ADC reference generated by the primary bandgap reference and stored in BGR register (0x86). The secondary bandgap voltage is typical 1.253V, the BGR ADC result would be 0x9F (160

CONFIDENTIAL

dec). Considering primary/secondary bandgap tolerance and ADC quantization errors, the normal BGR ADC range would be +/-6%, i.e., the BGR ADC range would be from 0x96 (150 dec) to 0xAA (170 dec).

There are differential voltage measurements available for every switch during both the LED ON-time and the LED OFF-time. This feature is disabled by default. To enable the feature, the LEDADCEN bit must be set in the SYSCFG register. After enabled, both VLEDON and VLEDOFF values are included in the round-robin sampling in sequence. When LEDADCEN bit is cleared, both VLEDON and VLEDOFF registers are cleared, and FLT_LEDON status registers are reset.

Even if the LEDADCEN is set, LED ON measurements for the LEDs are skipped in the following cases

- LED ON duration is less than 320 oscillator clock cycles
- Always LED OFF
- OPEN fault is detected, until latch time ends up

LED OFF measurements for the LEDs are skipped in the following cases

- LED OFF duration is less than 320 oscillator clock cycles
- Always LED ON
- Thermal shutdown or CP errors detected

The round-robin sampling sequence is implemented in this order (disabled inputs are skipped):
BGR→ADC1→ADC2→DIETEMP→CS→LEDON/OFF1→
BGR→ADC1→ADC2→DIETEMP→CS→LEDON/OFF2→
…….
BGR→ADC1→ADC2→DIETEMP→CS→LEDON/OFF15→
BGR→ADC1→ADC2→DIETEMP→CS→LEDON/OFF16

BGR, ADC1, ADC2, DIETEMP and CS are sampled continuously. For LED ON/OFF ADC conversions, it waits for the switch turn-on and turn-off time.

Table 1. ADC Registers

Address	ADC	LSB	Enable
0x86	BGR	2V / 256	Always Enable
0x87	ADC1	5V / 256	Always Enable
0x88	ADC2	5V / 256	Always Enable
0x89	CS	5V / 256 (CSGAIN=0b) 0.5V / 256 (CSGAIN=1b)	CSEN
0x8A	DIETEMP	1°C	Aways Enable
0x98-0xA7	LEDONxx	20V / 256	LEDADCEN
0xA8-0xB7	LEDOFFxx	20V / 256	LEDADCEN

UART INTERFACE

UART (Universal Asynchronous Receiver and Transmitter) slave is the host interface used to access the internal registers. It provides a “clockless” communication between master and slave. Since there is no clock, the data sampling rate (baudrate) should be agreed between all parties in the UART communication bus before starting any communication.

Asynchronous serial input from RX pin is sampled by the slave and the received bytes are interpreted by the slave and read or write command is executed. Host might ask to get an acknowledge byte from the UART slave after a write command request. UART command/response frames are confirmed with CRC16 for data integrity. In the environment there might be up to 16 UART slaves together with a UART master. UART slaves can also accept broadcast commands, so UART master can write same data to all UART slaves at a time in the same environment. UART slave provides the acknowledgement or read data through TX pin. All RX pin of UART slaves in the environment and all TX pins in the environment are shared. Hence, only one UART slave should drive the TX pin in open-drain mode at a time when a response is expected. This requires ACKEN, SEPTR and CLK_SEL configuration should be set same for all UART slaves

UART Physical Layer

The ID803 UART interface supports a half duplex protocol only (transmit and receive cannot overlap). This support ensures compatibility with the CAN physical layer when required due to cabled connections. There is a tri-state TX output driver to support multiple devices on the same bus.

For direct UART connections on the same PCB with MCU, the ID803 devices share a common pair of TX and RX signals as shown in Figure 13. The RX of the host connects to the TX of the ID803 devices, and vice versa.

CONFIDENTIAL

When the MCU is on a separate PCB board, the TX and RX signals can be connected through a CAN transceiver for better EMI performance which is shown in Figure 14

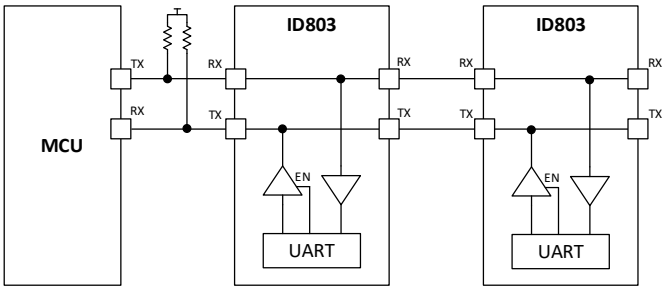

Figure 13 : UART Direct Connection

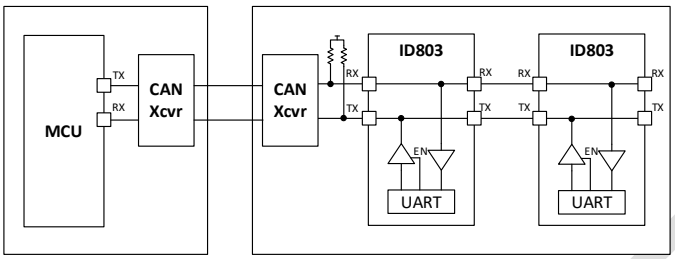

Figure 14 : UART Connection through CAN transceiver

The data pin (either RX or TX) stays at High when it is inactive. By the falling edge of RX data pin, UART slave starts sampling the incoming byte. (vice versa for Slave to Master communication). The system clock (16MHz or 8MHz) is divided into 16 sampling cycles for each bit, hence the baud rate can be 1Mbps or 500kbps. ID803 samples each bit data at 8th sampling cycle. Due to MCU and the ID803 oscillator variations, data synchronization would be worse towards the last transferring bits. For this reason, ID803 has an optional sampling option through SAMP_SEL bit in 0xD1 register. The incoming data bit is sampled in 7th, 8th and 9th sampling cycles and 3-samples are voted to decide the bit value. This would also help to filter any glitches on the RX bus.

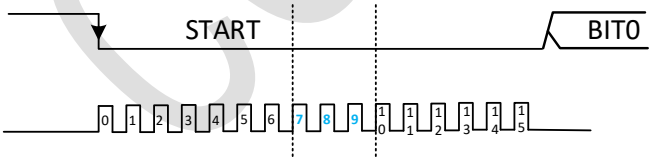

Figure 15 : UART Bit Sampling

A byte is sent together with a START (Logic 0) bit at the beginning and a STOP (Logic 1) bit is padded to the end of the byte. Hence 10-bits are transferred to send a "byte". LSB is sent first in the byte transfer.

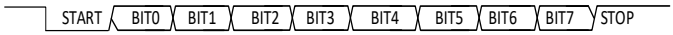

Figure 16 : UART Byte Format

UART Communications Protocol

The ID803 is designed to support a command and response UART protocol where a host microcontroller sends command frames of varying types and the ID803 devices respond accordingly. The command frame addresses either one ID803 device directly or broadcasts to all the devices on the bus. There are three types of command frames that can be received at the ID803 RX input.

- **Broadcast Write Command**:
  To all ID803 devices (1, 2, 3, 4, 5, 8, 12, 16, 20 or 32 bytes)
- **Single Device Write Command**:
  To the addressed ID803 device (1, 2, 3, 4, 5, 8, 12, 16, 20 or 32 bytes)
- **Single Device Read Command**:
  To the addressed I803 device. (1, 2, 3, 4, 5, 8, 12, 16, 20 or 32 bytes)

There is no response frame following a broadcast write command. The addressed ID803 device can provide two types of response frames at its TX output.

- **Single Device Write Acknowledge (if ACKEN=1b):**
  From the addressed ID803 device (1byte)
- **Single Device Read response:**
  From the addressed ID803 device (1, 2, 3, 4, 5, 8, 12, 16, 20 or 32 bytes)

Broadcast Write command

The broadcast write command is comprised of the following sequence.

INIT	0xBF	REGADDR	DATA1	●●	DATAn	CRCL	CRCH

There is no response given following a broadcast write command.

Single Device Write Command

The single device write command sequence is as below.

CONFIDENTIAL

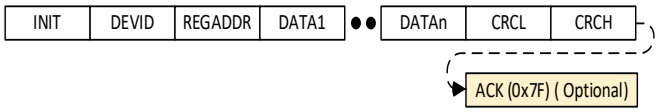

If the ACKEN bit (Register 0x05[5]) is set, the addressed device transmits an ACK (0x7F) back to the MCU through TX pin upon a successful write. The ACK_EN bit should be the same for all devices on the same UART bus, therefore, it must be set through broadcast write command including SEPTR bit together.

Single Device Read Response

The single device read response is as follows.

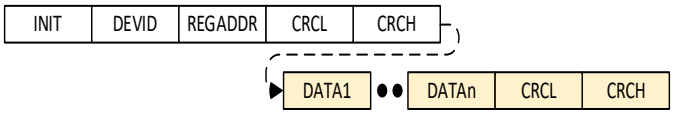

ID803 provides the requested number of data bytes from the INIT along with CRC for these bytes

UART Communications Reset

The MCU can make the ID803 UART protocol state machine reset at any time by holding the RX input continuously low for a period of at least 192 system clock cycles. After the reset, ID803 UART is initialized to receive INIT byte. The communications reset does not reset the registers, nor affect the LEDx outputs.

Transaction Frame Description

The Command and Response frames include the following byte types:

- INIT – Frame Initialization Byte
- DEVID – Device Identification Byte
- REGADDR – Starting Register Address Byte
- DATAn – N Data Bytes (N = 1, 2, 3, 4, 5, 8, 12, 16, 20 or 32)
- CRCL/CRCH – Two bytes of CRC
- ACK – Acknowledge Byte

INIT byte

INIT byte is encoded for the number of data bytes to be transferred and the command type (Read or Write) as well.

Table 2. INIT Byte

INIT BYTE	Command Type	Number of Data Bytes
0x87	Write	1 Byte
0x99	Write	2 Bytes
0x1E	Write	3 Bytes
0xAA	Write	4 Bytes
0xAD	Write	5 Bytes
0x13	Write	8 Bytes
0x2D	Write	12 Bytes
0x33	Write	16 Bytes
0xB5	Write	20 Bytes
0xB4	Write	32 Bytes
0x4B	Read	1 Byte
0xCC	Read	2 Bytes
0xD2	Read	3 Bytes
0x55	Read	4 Bytes
0xE5	Read	5 Bytes
0x26	Read	8 Bytes
0xE1	Read	12 Bytes
0x66	Read	16 Bytes
0x7A	Read	20 Bytes
0x78	Read	32 Bytes

DEVID byte

The ID803 configures its 4-bit device address according to the voltage present on ADDR3-0 pins at start-up and then latched.

Table 3. Device ID Format

Bit 7	Bit 6	Bit 5	Bit 4	Bit 3	Bit 2	Bit 1	Bit 0
P[1]	P[0]	DT	BR	ADDR3	ADDR2	ADDR1	ADDR0

DT bit in Bit 5 is Device Type bit. It is 1b in ID803
BR bit in Bit 4 is Broadcast indication bit.
P[1]/P[0] bits are the parity bits

- P[1] = ~(ADDR1 ^ ADDR3 ^ BR ^ DT)
- P[0] = ADDR0 ^ ADDR1 ^ ADDR2 ^BR

where "^" is a bitwise XOR and “~” is a bitwise Not.

If the command is a broadcast write, DEVID byte should be equal to 0xBF.

REGADDR byte

REGADDR byte is used to indicate the starting register address for the write/read command. There is no overflow control, hence address is wrapped back to 0 if the size of the transferred bytes exceeds the area referenced by REGADDR.

DATAn bytes

DATAn bytes are the raw data to be transferred. The size of data bytes is already encoded in the INIT byte.

CONFIDENTIAL

CRC bytes

CRCL and CRCH bytes are the Cyclic Redundancy Check bytes used for data integrity within the frame. CRC16-IBM is the selected polynomial $(x^{16}+x^{15}+x^{2}+1)$ for the redundancy check. If CRC16 does not match, then the incoming command is ignored. The CRC error count register (CERRCNT) is incremented each time when a CRC error occurs on an incoming read or write command.

ACK byte

If the ACKEN bit is set in the SYSCFG register, the write acknowledgment is enabled. Following a successfully received write command (valid CRC), the addressed device transmits one ACK byte (0x7F) on the TX line.

UART Errors

The ID803 UART starts by receiving valid INIT byte listed in Table 2. The UART state waiting for INIT byte is INIT state, where TX pin is pulled high. The ID803 UART state will be transitioned to the INIT state once the following errors are faced.

- INIT Error – Receiving not valid INIT byte
- Parity Error in DEVID byte
- CRC Error – it is counted in CERRCNT (0x8B) register
- BYTE Timeout – it is configurable through UART_CONFIG register (0xD1).
- ECHO Timeout when SEPTR is configured to 0b
- UART Communication reset by pulling RX low for at least 192 system clock cycles
- Broadcast frame error
- Broadcast read command

COMMUNICATIONS WATCHDOG TIMER

The ID803 device features a communications watchdog timer to monitor UART communications. This feature is controlled by CMWEN (Register 0x05[3]). If a command is not successfully received within a configured time, the UART watchdog timer asserts the expire information. There is no action held in the UART slave if communication watchdog timer expires. For the reduced timeout, configured timeout is divided by 8.

DEVICE FUNCTIONAL MODES

Figure 17 shows ID803 functional modes.

In the **unpowered** state, all switches are OFF state and no other control is possible.

After VDD is applied and the device exits power-on-reset (POR), it starts with **DIAG1** state and according to UART activity it moves to other states. If there is no UART communication for 1/8 of programmed CMWTAP, ID803 states moves to **DIAG2** state. And in any state writing 0xAA to PASSCODE register will move the device state to **NORMAL** state. Writing 0x55 to PASSCODE in DIAG2 moves the device state to **DIAG1** back. And if there is no UART communication detected for the programmed CMWTAP time, the state moves to **FAILSAFE** state.

In **DIAG1** and **DIAG2** states, all switches are forced to be OFF unless no OPEN fault is detected

In **FAILSAFE** state, the latched FS pin determines the switches state. If it is High, the switches are turned ON unless there is no TSD detected and if the latched FS pin is Low, the switches are turned OFF unless there is no OPEN fault detected.

In **NORMAL** state, all switches start to be controlled by the register configuration unless there is no OPEN nor TSD fault. Switches are enabled by configured PWM pulses if SET_LED_OFF is not High.

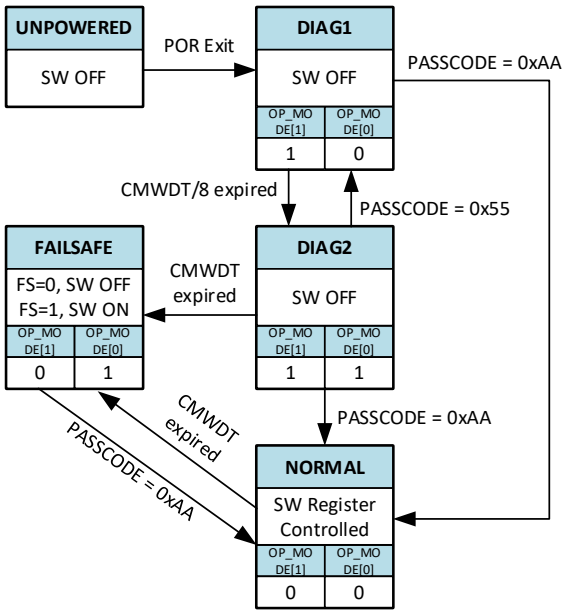

Figure 17 : Functional mode Overview

CONFIDENTIAL

FAULTS AND DIAGNOSTICS

Error! Reference source not found. summarizes the ID803 behavior under each fault detection and protection.

Table 4. Faults and Diagnostics Description

CONDITION	DETECTION	FAULT Reaction	STATUS BIT	CONFIGURABLE FAULT RESPONSE
VDD is below UVLO	VDD < 3.92V(typ)	Yes	PWR	N/A
	Undervoltage condition of system supply voltage is monitored at VDD pin. If the VDD voltage falls below a predefined threshold, 3.92V typ, the device transitions to Unpowered state, and all switches are set to open.			
VDD Overvoltage	VDD > 5.77V typ	No	VDD_OV_FLT	EN_VDD_OV
	If VDD voltage exceeds a predefined threshold, 5.77V typ, the switch between CPN and VDD is opened if the highest LEDx voltage is less than 4.2V and the fault bit, VDD_OV_FLT, is set to “1”.			
Resistive FET Detection	VLEDx > VTH_SHORT	No	FLT_RESFET[16:1]	NA
	If the differential voltage of each internal switch is greater than the LED Short Threshold ($V_{TH\text{-}SHORT}$) right before the end of a switch ON pulse, then a fault is reported by setting the corresponding FLT_RESFET bits to “1”.			
LED Open Detection	VLEDx > VTH_OPEN	Yes	FLT_OPEN_OR_DRV[16:1]	NA
	ID803 monitors open condition across each SW FET. If the voltage across each switch exceeds LED Open Threshold ($V_{TH\text{-}OPEN}$), the switch FET is closed and all the corresponding bits in the FLT_OPEN_OR_DRV are set to “1”.			
LED Short Detection	VLEDx < VTH_SHORT	No	FLT_SHORT[16:1]	NA
	ID803 monitors short condition across each SW FET and reports if the voltage across each switch decreases below the LED Short Threshold ($V_{TH\text{-}SHORT}$) at the end of LED ON, a corresponding register bit in FLT_SHORT register is set to “1”.			
Driver health diagnostic	NA	No	FLT_OPEN_OR_DRV[16:1]	DRV_CHK
	To check the health of the SW FET driver, the DRV_CHK bit in the OUTCTRL register can be set by MCU. Upon setting this bit, all the gate driver outputs are disconnected from the output switches and the gate biases are pulled low through internal pull-down resistor. If all the switches are correctly turned off and are at high-z, all the corresponding bits in the FLT_OPEN_OR_DRV are set to "1".			
Matrix SW POR	NA	Yes	FLT_MATRIX_POR[16:1]	NA
	If the floating supply in the switch module falls below a defined threshold, the switch is set to open. This mechanism is triggered if the internal supply to the regulator or the VDD supply, or the charge pump fails. ID803 sets the corresponding switch open and all the corresponding bits in the FLT_MATRIX_POR register are set to "1".			
LED Current Monitoring	NA	No	CS	CSEN, CSGAIN
	If the CSEN bit is set to “1” in the SYSCFG register, the voltage across CS pin and GND is measured using an ADC. The measured results are stored in the CS register.			
UART Communication Watchdog	Not Receiving time valid UART > CMWTAP	Yes	OPMODE	CMWEN, CMWTAP
	If CMWEN bit in SYSCFG register is set to “1” and a valid UART transaction for more than a pre-programmed time in CMWTAP bits is not received, the device enters the FAIL-SAFE state, and an associated error bit is set in the status register. In FAIL_SAFE state, all switches are OFF if FS pin is low, all switches are ON if FS pin is high.			
Internal UART Watchdog Check	Not Receiving time valid UART > CMWTAP/8 right after start-up	No	OPMODE	CMWEN, CMWTAP
	A health check of the UART watchdog can be performed upon power up. MCU should wait at least 125ms/250ms (dependent on CLK_SEL pin) without any UART communication after startup. If the UART watchdog is not functional, ID803 will stay at DIAG1 mode, otherwise ID803 will enter DIAG2 mode. The switches are kept OFF in DIAG1 mode			
PWM Monitoring	NA	No	PWM_ERR, PWM_MISCOUNT	NA
	The diagnostic PWM counter checks the output of each channel PWM counter in a round robin to make sure the output of each PWM counter is programmed. If a PWM error count occurs, PWM_ERR bit is set to “1” in the STATUS register and a bit for a corresponding PWM counter is set to “1” in the PWM_MISCOUNT registers.			
FS pin status	NA	No	FS_PIN	NA
	During FAIL-SAFE state, switches are set according to the FS-pin voltage, all switches shall be set to open if the voltage on the FS-pin is lower than $V_{IL\text{-}TH}$, and shall be set to close if the voltage on the FS-pin is more than $V_{IH\text{-}TH}$. The FS-pin			

CONFIDENTIAL

Table 4. Faults and Diagnostics Description

CONDITION	DETECTION	FAULT Reaction	STATUS BIT	CONFIGURABLE FAULT RESPONSE
	can be connected to GND or the VDD. There is an FS_PIN bit in the STATUS1 register that shows the voltage level of the FS pin.			
Charge pump Voltage Monitoring	VCP < V_{CPTH-F}	Yes	CHPMP_ERR	NA
	The charge pump voltage is monitored. If the charge pump voltage is decreased below a threshold with t_{CP_GF} deglitch time, all the switches are set to open position. The CHPMP_ERR bit is set to “1” in the STATUS2 register if a charge pump error occurs.			
Internal Supply Monitoring	Internal supply < UVLO threshold	Yes	PWR	NA
	When 1.8V internal bias reduces below a specified threshold, it generates a POR that resets digital and sets the output switches to open. The PWR bit is then set to default value of “1”.			
Bandgap ADC	BGR > 0xA4 or BGR < 0x90	No	BGR	NA
	The ID803 has secondary bandgap (typical 1.2V) and digitizes the secondary bandgap voltage with the 2V reference generated by the primary bandgap. The ADC result is stored in BGR register.			
Thermal Limit	T_J > 175°C typically	Yes	TSD	TSDEN
	If the measured DIETEMP by ADC is higher than 175°C, the TSD bit in STATUS2 register is set. If thermal shutdown is detected, switches are kept turned OFF when TSDEN is configured to 11b (if there is no OPEN detected) until DIETEMP is below 160°C and the bit should be cleared by MCU			

CONFIDENTIAL

REGISTERS

ID803 system configuration, status and telemetry registers are accessible through UART communication. Upon exiting Power-on-Reset mode, registers are reset to their default values.

Register bits are read or write capable as defined in the register descriptions. Refer to Table 5 for the coding used to define the access type of each bit. Writes to undefined registers or the writing of undefined values are unsupported and can result in undesired operation. Reads of undefined registers will return zero values. Reserved bits in writeable registers must be written with zero values. Table 6 represents the register map of valid ID803 registers.

Table 5. Access Types

Coding	Access Type Description
W	Write Only
R	Read Only
R/W	Read or Write
R/C	Read and Clear
R/W0C	Read or Write 0 to Clear

Table 6. Register Map

ADDR	REGISTER	D7	D6	D5	D4	D3	D2	D1	D0	DEFAULT
0x00	CFG	RESERVED		RESERVED	**SHRF_FLT**	RESERVED	TSDEN[1:0]		**EN_VDD_OV**	0001 0001
0x01	OUTCTRL	DRV_CHK	PARLED[1:0]		**TX_STR**	SYNC_STR	SYNCOEN	SYNCPEN	RESERVED	0001 0000
0x02	TWLMT	TWLMT[7:0]								0000 0000
0x03	SLEWL	RESERVED		**SLEW08_05[2:0]**			**SLEW04_01[2:0]**			0010 1101
0x04	SLEWH	RESERVED		**SLEW16_13[2:0]**			**SLEW12_09[2:0]**			0010 1101
0x05	SYSCFG	SEPTR	LEDADCEN	ACKEN	PSON	**CMWEN**	CSGAIN	**CHPMP_SS**	CSEN	0000 1010
0x06	CMWTAP	RESERVED				**CMWTAP[3:0]**				0000 1000
0x07	PWMTICK	PTBASE[2:0]		**PTCNT[5:0]**						0001 1100
0x08	OPENTH	**OPENTH16_13[1:0]**		**OPENTH12_09[1:0]**		**OPENTH08_05[1:0]**		**OPENTH04_01[1:0]**		1111 1111
0x09	SET_LED_OFFL	SET_LED_OFF[8:1]								0000 0000
0x0A	SET_LED_OFFH	SET_LED_OFF[16:9]								0000 0000
0x0B–0x14	RESERVED	RESERVED								0000 0000
0x15	PHASE01H	PHASE01[9:2]								0000 0000
0x16	PHASE02H	PHASE02[9:2]								0000 0000
0x17	PHASE03H	PHASE03[9:2]								0000 0000
0x18	PHASE04H	PHASE04[9:2]								0000 0000
0x19	PHASE05H	PHASE05[9:2]								0000 0000
0x1A	PHASE06H	PHASE06[9:2]								0000 0000
0x1B	PHASE07H	PHASE07[9:2]								0000 0000
0x1C	PHASE08H	PHASE08[9:2]								0000 0000
0x1D	PHASE09H	PHASE09[9:2]								0000 0000
0x1E	PHASE10H	PHASE10[9:2]								0000 0000
0x1F	PHASE11H	PHASE11[9:2]								0000 0000
0x20	PHASE12H	PHASE12[9:2]								0000 0000
0x21	PHASE13H	PHASE13[9:2]								0000 0000
0x22	PHASE14H	PHASE14[9:2]								0000 0000
0x23	PHASE15H	PHASE15[9:2]								0000 0000
0x24	PHASE16H	PHASE16[9:2]								0000 0000
0x25	PHASE04_01L	PHASE04[1:0]		PHASE03[1:0]		PHASE02[1:0]		PHASE01[1:0]		0000 0000
0x26	PHASE08_05L	PHASE08[1:0]		PHASE07[1:0]		PHASE06[1:0]		PHASE05[1:0]		0000 0000
0x27	PHASE12_09L	PHASE12[1:0]		PHASE11[1:0]		PHASE10[1:0]		PHASE09[1:0]		0000 0000
0x28	PHASE16_13L	PHASE16[1:0]		PHASE15[1:0]		PHASE14[1:0]		PHASE13[1:0]		0000 0000
0x29	WIDTH01H	WIDTH01[9:2]								0000 0000
0x2A	WIDTH02H	WIDTH02[9:2]								0000 0000
0x2B	WIDTH03H	WIDTH03[9:2]								0000 0000

Table 6. Register Map

ADDR	REGISTER	D7	D6	D5	D4	D3	D2	D1	D0	DEFAULT
0x2C	WIDTH04H	WIDTH04[9:2]								0000 0000
0x2D	WIDTH05H	WIDTH05[9:2]								0000 0000
0x2E	WIDTH06H	WIDTH06[9:2]								0000 0000
0x2F	WIDTH07H	WIDTH07[9:2]								0000 0000
0x30	WIDTH08H	WIDTH08[9:2]								0000 0000
0x31	WIDTH09H	WIDTH09[9:2]								0000 0000
0x32	WIDTH10H	WIDTH10[9:2]								0000 0000
0x33	WIDTH11H	WIDTH11[9:2]								0000 0000
0x34	WIDTH12H	WIDTH12[9:2]								0000 0000
0x35	WIDTH13H	WIDTH13[9:2]								0000 0000
0x36	WIDTH14H	WIDTH14[9:2]								0000 0000
0x37	WIDTH15H	WIDTH15[9:2]								0000 0000
0x38	WIDTH16H	WIDTH16[9:2]								0000 0000
0x39	WIDTH04_01L	WIDTH04[1:0]		WIDTH03[1:0]		WIDTH02[1:0]		WIDTH01[1:0]		0000 0000
0x3A	WIDTH08_05L	WIDTH08[1:0]		WIDTH07[1:0]		WIDTH06[1:0]		WIDTH05[1:0]		0000 0000
0x3B	WIDTH12_09L	WIDTH12[1:0]		WIDTH11[1:0]		WIDTH10[1:0]		WIDTH09[1:0]		0000 0000
0x3C	WIDTH16_13L	WIDTH16[1:0]		WIDTH15[1:0]		WIDTH14[1:0]		WIDTH13[1:0]		0000 0000
0x3D	BANK_PHASE01L	BANK_PHASE01[7:0]								0000 0000
0x3E	BANK_PHASE02L	BANK_PHASE02[7:0]								0000 0000
0x3F	BANK_PHASE03L	BANK_PHASE03[7:0]								0000 0000
0x40	BANK_PHASE04L	BANK_PHASE04[7:0]								0000 0000
0x41	BANK_PHASE04_01H	BANK_PHASE04[9:8]		BANK_PHASE03[9:8]		BANK_PHASE02[9:8]		BANK_PHASE01[9:8]		0000 0000
0x42	BANK_PHASE05L	BANK_PHASE05[7:0]								0000 0000
0x43	BANK_PHASE06L	BANK_PHASE06[7:0]								0000 0000
0x44	BANK_PHASE07L	BANK_PHASE07[7:0]								0000 0000
0x45	BANK_PHASE08L	BANK_PHASE08[7:0]								0000 0000
0x46	BANK_PHASE05_08H	BANK_PHASE08[9:8]		BANK_PHASE07[9:8]		BANK_PHASE06[9:8]		BANK_PHASE05[9:8]		0000 0000
0x47	BANK_PHASE09L	BANK_PHASE09[7:0]								0000 0000
0x48	BANK_PHASE10L	BANK_PHASE10[7:0]								0000 0000
0x49	BANK_PHASE11L	BANK_PHASE11[7:0]								0000 0000
0x4A	BANK_PHASE12L	BANK_PHASE12[7:0]								0000 0000
0x4B	BANK_PHASE12_09H	BANK_PHASE12[9:8]		BANK_PHASE11[9:8]		BANK_PHASE10[9:8]		BANK_PHASE09[9:8]		0000 0000
0x4C	BANK_PHASE13L	BANK_PHASE13[7:0]								0000 0000
0x4D	BANK_PHASE14L	BANK_PHASE14[7:0]								0000 0000
0x4E	BANK_PHASE15L	BANK_PHASE15[7:0]								0000 0000
0x4F	BANK_PHASE16L	BANK_PHASE16[7:0]								0000 0000
0x50	BANK_PHASE16_13H	BANK_PHASE16[9:8]		BANK_PHASE15[9:8]		BANK_PHASE14[9:8]		BANK_PHASE13[9:8]		0000 0000
0x51	BANK_WIDTH01L	BANK_WIDTH01[7:0]								0000 0000
0x52	BANK_WIDTH02L	BANK_WIDTH02[7:0]								0000 0000
0x53	BANK_WIDTH03L	BANK_WIDTH03[7:0]								0000 0000
0x54	BANK_WIDTH04L	BANK_WIDTH04[7:0]								0000 0000
0x55	BANK_WIDTH04_01H	BANK_WIDTH04[9:8]		BANK_WIDTH03[9:8]		BANK_WIDTH02[9:8]		BANK_WIDTH01[9:8]		0000 0000
0x56	BANK_WIDTH05L	BANK_WIDTH05[7:0]								0000 0000
0x57	BANK_WIDTH06L	BANK_WIDTH06[7:0]								0000 0000
0x58	BANK_WIDTH07L	BANK_WIDTH07[7:0]								0000 0000
0x59	BANK_WIDTH08L	BANK_WIDTH08[7:0]								0000 0000
0x5A	BANK_WIDTH08_05H	BANK_WIDTH08[9:8]		BANK_WIDTH07[9:8]		BANK_WIDTH06[9:8]		BANK_WIDTH05[9:8]		0000 0000
0x5B	BANK_WIDTH09L	BANK_WIDTH09[7:0]								0000 0000
0x5C	BANK_WIDTH10L	BANK_WIDTH10[7:0]								0000 0000
0x5D	BANK_WIDTH11L	BANK_WIDTH11[7:0]								0000 0000

Table 6. Register Map

ADDR	REGISTER	D7	D6	D5	D4	D3	D2	D1	D0	DEFAULT
0x5E	BANK_WIDTH12L	BANK_WIDTH12[7:0]								0000 0000
0x5F	BANK_WIDTH12_09H	BANK_WIDTH12[9:8]		BANK_WIDTH11[9:8]		BANK_WIDTH10[9:8]		BANK_WIDTH09[9:8]		0000 0000
0x60	BANK_WIDTH13L	BANK_WIDTH13[7:0]								0000 0000
0x61	BANK_WIDTH14L	BANK_WIDTH14[7:0]								0000 0000
0x62	BANK_WIDTH15L	BANK_WIDTH15[7:0]								0000 0000
0x63	BANK_WIDTH16L	BANK_WIDTH16[7:0]								0000 0000
0x64	BANK_WIDTH16_13H	BANK_WIDTH16[9:8]		BANK_WIDTH15[9:8]		BANK_WIDTH14[9:8]		BANK_WIDTH13[9:8]		0000 0000
0x65–0x6F	RESERVED	RESERVED								0000 0000
0x70	LEDONTH01	LEDONTH01H[3:0]				LEDONTH01L[3:0]				0000 0000
0x71	LEDONTH02	LEDONTH02H[3:0]				LEDONTH02L[3:0]				0000 0000
0x72	LEDONTH03	LEDONTH03H[3:0]				LEDONTH03L[3:0]				0000 0000
0x73	LEDONTH04	LEDONTH04H[3:0]				LEDONTH04L[3:0]				0000 0000
0x74	LEDONTH05	LEDONTH05H[3:0]				LEDONTH05L[3:0]				0000 0000
0x75	LEDONTH06	LEDONTH06H[3:0]				LEDONTH06L[3:0]				0000 0000
0x76	LEDONTH07	LEDONTH07H[3:0]				LEDONTH07L[3:0]				0000 0000
0x77	LEDONTH08	LEDONTH08H[3:0]				LEDONTH08L[3:0]				0000 0000
0x78	LEDONTH09	LEDONTH09H[3:0]				LEDONTH09L[3:0]				0000 0000
0x79	LEDONTH10	LEDONTH10H[3:0]				LEDONTH10L[3:0]				0000 0000
0x7A	LEDONTH11	LEDONTH11H[3:0]				LEDONTH11L[3:0]				0000 0000
0x7B	LEDONTH12	LEDONTH12H[3:0]				LEDONTH12L[3:0]				0000 0000
0x7C	LEDONTH13	LEDONTH13H[3:0]				LEDONTH13L[3:0]				0000 0000
0x7D	LEDONTH14	LEDONTH14H[3:0]				LEDONTH14L[3:0]				0000 0000
0x7E	LEDONTH15	LEDONTH15H[3:0]				LEDONTH15L[3:0]				0000 0000
0x7F	LEDONTH16	LEDONTH16H[3:0]				LEDONTH16L[3:0]				0000 0000
0x80	ADCREFSEL	RESERVED				BGRREF	**ADC1REF**	**ADC2REF**	CSREF	0000 0110
0x81-0x82	RESERVED	RESERVED								0000 0000
0x83	SSYNC	RESERVED							SSYNC	0000 0000
0x84	STATUS1	RESERVED		SYNC_OK	AREGFAIL	LDO_OV_FLT	FS_PIN	**OP_MODE[1:0]**		0000 0010
0x85	STATUS2	VDD_OV_FLT	PWM_ERR	CHPMP_ERR	VLED_ERR	TRIM_ERR	TW	TSD	**PWR**	0000 0001
0x86	BGR	BGR[7:0]								-
0x87	ADC1	ADC1[7:0]								-
0x88	ADC2	ADC2[7:0]								-
0x89	CS	CS[7:0]								-
0x8A	DIETEMP	DIETEMP[7:0]								-
0x8B	CERRCNT	CERRCNT[7:0]								0000 0000
0x8C	FLT_OPEN_OR_DRVL	FLT_OPEN_OR_DRV[8:1]								0000 0000
0x8D	FLT_OPEN_OR_DRVH	FLT_OPEN_OR_DRV[16:9]								0000 0000
0x8E	FLT_SHORTL	FLT_SHORT[8:1]								0000 0000
0x8F	FLT_SHORTH	FLT_SHORT[16:9]								0000 0000
0x90	FLT_RESFETL	FLT_RESFET[8:1]								0000 0000
0x91	FLT_RESFETH	FLT_RESFET[16:9]								0000 0000
0x92	FLT_MATRIX_PORL	SW_POR_N[8:1]								0000 0000
0x93	FLT_MATRIX_PORH	SW_POR_N[16:9]								0000 0000
0x94	FLT_LEDONL	FLT_LEDON[8:1]								0000 0000
0x95	FLT_LEDONH	FLT_LEDON[16:9]								0000 0000
0x96	PWM_MISCOUNTL	PWM_MISCOUNT[8:1]								0000 0000
0x97	PWM_MISCOUNTH	PWM_MISCOUNT[16:9]								0000 0000
0x98	VLEDON01	VLEDON01[7:0]								-
0x99	VLEDON02	VLEDON02[7:0]								-

Table 6. Register Map

ADDR	REGISTER	D7	D6	D5	D4	D3	D2	D1	D0	DEFAULT
0x9A	VLEDON03	VLEDON03[7:0]								-
0x9B	VLEDON04	VLEDON04[7:0]								-
0x9C	VLEDON05	VLEDON05[7:0]								-
0x9D	VLEDON06	VLEDON06[7:0]								-
0x9E	VLEDON07	VLEDON07[7:0]								-
0x9F	VLEDON08	VLEDON08[7:0]								-
0xA0	VLEDON09	VLEDON09[7:0]								-
0xA1	VLEDON10	VLEDON10[7:0]								-
0xA2	VLEDON11	VLEDON11[7:0]								-
0xA3	VLEDON12	VLEDON12[7:0]								-
0xA4	VLEDON13	VLEDON13[7:0]								-
0xA5	VLEDON14	VLEDON14[7:0]								-
0xA6	VLEDON15	VLEDON15[7:0]								-
0xA7	VLEDON16	VLEDON16[7:0]								-
0xA8	VLEDOFF01	VLEDOFF01[7:0]								-
0xA9	VLEDOFF02	VLEDOFF02[7:0]								-
0xAA	VLEDOFF03	VLEDOFF03[7:0]								-
0xAB	VLEDOFF04	VLEDOFF04[7:0]								-
0xAC	VLEDOFF05	VLEDOFF05[7:0]								-
0xAD	VLEDOFF06	VLEDOFF06[7:0]								-
0xAE	VLEDOFF07	VLEDOFF07[7:0]								-
0xAF	VLEDOFF08	VLEDOFF08[7:0]								-
0xB0	VLEDOFF09	VLEDOFF09[7:0]								-
0xB1	VLEDOFF10	VLEDOFF10[7:0]								-
0xB2	VLEDOFF11	VLEDOFF11[7:0]								-
0xB3	VLEDOFF12	VLEDOFF12[7:0]								-
0xB4	VLEDOFF13	VLEDOFF13[7:0]								-
0xB5	VLEDOFF14	VLEDOFF14[7:0]								-
0xB6	VLEDOFF15	VLEDOFF15[7:0]								-
0xB7	VLEDOFF16	VLEDOFF16[7:0]								-
0xB8–0xCF	RESERVED	RESERVED								0000 0000
0xD0	RESERVED	RESERVED	RESERVED	RESERVED	RESERVED	RESERVED	RESERVED	RESERVED	RESERVED	0000 0000
0xD1	UART_CONFIG	RESERVED				SAMP_SEL	**TO_BYTE_EN**	**TO_BYTE_CFG[1:0]**		0000 0101
0xD2–0xF0	RESERVED	RESERVED								0000 0000
0xF1	PASSCODE	PASSCODE[7:0]								0000 0000
0xF2	BAD_PASSCODE_CNT	BAD_PASSCODE_CNT[7:0]								0000 0000
0xF3-0xFD	RESERVED	RESERVED								0000 0000
0xFE	ICIDL	ICID[7:0]								0000 0000
0xFF	ICIDH	ICID[15:8]								0000 0000

Configuration Register

The CFG register value controls thermal shutdown and VDD overvoltage.

Table 7. CFG Register (Address 0x00)

ADDR	Bit	Name	Type	Default
0x00	7:5	RESERVED	R	3'b000
0x00	4	**SHRF_FLT**	R/W	1'b**1**
	MASK_SHRF_FLT - Enables/Disables Mask Short Flag for SHORT/RESFET Faults 0 = No Masking SHORT/RESFET faults while FET is slewing 1 = Mask SHORT/RESFET faults while FET is slewing [Default]			
0x00	3	RESERVED	R	1'b0
0x00	2:1	TSDEN[1:0]	R/W	2'b00
	Thermal Shutdown Enable Enable shutdown of all switches upon a die junction over-temperature event when DIETEMP exceeds 175°C. Upon an over-temperature event, the TSD status bit is set and remains set until DIETEMP drops below 160°C. 00 = All switches retain original programming [Default] 01 = Retain previous setting 10 = Retain previous setting 11 = All LED switches are switched off when DIETEMP > 175°C			
0x00	0	**EN_VDD_OV**	R/W	1'b**1**
	Enable VDD Overvoltage Protection If VDD exceeds the VDD_OV threshold, VDD connection to the charge pump is opened if the highest LEDx voltage is less than 4.2V. 0 = Disable VDD OV 1 = Enable VDD OV [Default]			

Output Control Register

The OUTCTRL register value controls driver health check, parallel switch configuration, TX output driver strength, SYNC output driver strength, SYNC output enable and SYNC pulse enable.

Table 8. OUTCTRL Register (Address 0x01)

ADDR	Bit	Name	Type	Default
0x01	7	DRV_CHK	R/W	1'b0
	Driver Health Check 0 = Normal operation. [Default] Does not disconnect the LED gate drivers from their switches 1 = LED Driver Health Check operation. Disconnects LED gate drivers from their corresponding FETs. Gates of switches are passively pulled down. In this health check mode, the respective FLT_OPEN_OR_DRV status bit is set when the gate of the switch is passively pulled low, and the driver output is high.			

Table 8. OUTCTRL Register (Address 0x01)

ADDR	Bit	Name	Type	Default
0x01	6:5	PARLED[1:0]	R/W	2'b00
	Parallel Switch Configuration Switches use shared PHASE, WIDTH, SLEW, OPENTH, LEDONTH and SET_LED_OFF settings. 00 = No parallel switches [Default] Bank 1 = LED1 – LED4 settings Bank 2 = LED5 – LED8 settings Bank 3 = LED9 – LED12 settings Bank 4 = LED13 – LED16 settings 01 = Bank 1 || Bank 2 Bank 1 = Bank 2 = LED1 – LED4 settings Bank 3 = LED9 – LED12 settings Bank 4 = LED13 – LED16 settings 10 = Bank 1 || Bank2, Bank 3 || Bank 4 Bank 1 = Bank 2 = LED1 – LED4 settings Bank 3 = Bank 4 = LED9 – LED12 settings 11 = Bank 1 || Bank 2 || Bank 3 || Bank 4 Bank 1 = Bank 2 = Bank 3 = Bank 4 = LED1 – LED4 settings			
0x01	4	**TX_STR**	R/W	1'b**1**
	TX Output Driver Strength 0 = Low (9mA typical) 1 = High (45mA typical) [Default]			
0x01	3	SYNC_STR	R/W	1'b0
	SYNC Output Driver Strength 0 = Low (9mA typical) [Default] 1 = High (45mA typical)			
0x01	2	SYNCOEN	R/W	1'b0
	SYNC Output Enable 0 = SYNC output disabled, only 500kΩ typical pull-down [Default] 1 = SYNC output enabled			
0x01	1	SYNCPEN	R/W	1'b0
	SYNC Pulse Enable 0 = If SYNCOEN = 1, SYNC is driven low (no pulses) [Default] 1 = If SYNCOEN = 1, SYNC is driven with a 50% duty cycle pulse to synchronize other devices			
0x01	0	RESERVED	R	1'b0

CONFIDENTIAL

Thermal Warning Limit Register

The TWLMT register value sets the die temperature above which the TW bit is set in the STATUS2 register.

Table 9. TWLMT Register (Address 0x02)

ADDR	Bit	Name	Type	Default
0x02	7:0	TWLMT	R/W	8'b0000 0000
	Thermal Warning Limit Thermal Warning temperature = TWLMT[7:0] * 1°C -50°C If DIETEMP > TWLMT, TW bit is set in the STATUS register If TWLMT = 0, disables thermal warning feature [Default]			

Slew Rate Registers

The SLEW registers set the 3 bit slew rate for each bank of four series connected with switches.

Table 10. SLEWx Registers (Address 0x03 to 0x04)

ADDR	Bit	Name	Type	Default
0x03	7:6	RESERVED	R	2'b00
0x03	5:3	**SLEW08_05[2:0]**	R/W	3'b**101**
	Slew Rate for Bank 2, LED5 – LED8			
0x03	2:0	**SLEW04_01[2:0]**	R/W	3'b**101**
	Slew Rate for Bank 1, LED1 – LED4			
0x04	7:6	RESERVED	R	2'b00
0x04	5:3	**SLEW16_13[2:0]**	R/W	3'b**101**
	Slew Rate for Bank 4, LED13 – LED16			
0x04	2:0	**SLEW12_09[2:0]**	R/W	3'b**101**
	Slew Rate for Bank 3, LED9 – LED12 000 = 7.5 mV/µs 001 = 15 mV/µs 010 = 30 mV/µs 011 = 60 mV/µs 100 = 120 mV/µs 101 = 240 mV/µs [Default] 110 = 480 mV/µs 111 = 960 mV/µs			

System Configuration Register

The SYSCFG register value controls TX Echo disable, LEDADC enable, ACK enable, Phase Shift enable, Communication Watchdog Timer enable, Current sense Gain selection, charge pump spread spectrum enable and Current sense enable.

SEPTR and ACKEN bits should be the same for all devices on the same UART bus, A broadcast write command to UART_CFG register must be completed during the initialization.

Table 11. SYSCFG Register (Address 0x05)

ADDR	Bit	Name	Type	Default
0x05	7	SEPTR	R/W	1'b0
		TX Echo on RX Disable To avoid responses, use broadcast writes to program SEPTR. 0 = CAN physical connection (TX echoed on RX) [Default] 1 = Direct UART connection (TX not echoed on RX)		
0x05	6	LEDADCEN	R/W	1'b0
		LED ADC Enable 0 = ADC measurements of VLEDONx / VLEDOFFx disabled [Default] 1 = ADC measurements of VLEDONx / VLEDOFFx enabled		
0x05	5	ACKEN	R/W	1'b0
		Write Acknowledge (ACK) Enable 0 = ACK disabled [Default] 1 = ACK (0x7F) transmitted by the target device following successfully received writes to a single device.		
0x05	4	PSON	R/W	1'b0
		Phase Shift Edge 0 = PHASE value sets LED turn-off (switch turn-on) [Default] 1 = PHASE value sets LED turn-on (switch turn-off)		
0x05	3	**CMWEN**	R/W	1'b**1**
		Communications Watchdog Timer Enable 0 = Communications watchdog timer disabled 1 = Communications watchdog timer enabled [Default]		
0x05	2	CSGAIN	R/W	1'b0
		Current Sense Gain 0 = 1x current sense gain (amplifier bypassed) [Default] 1 = 10x current sense gain		
0x05	1	**CHPMP_SS**	R/W	1'b**1**
		Charge Pump Spread Spectrum Enable 0 = Spread spectrum disabled 1 = Spread spectrum enabled [Default]		
0x05	0	CSEN	R/W	1'b0
		Current Sense Enable 0 = ADC measurement of CS pin disabled, NC implemented on CS/NC pin [Default] 1 = ADC measurement of CS pin enabled.		

CONFIDENTIAL

Communication Watchdog Timer Register

Table 12. CMWTAP Register (Address 0x06)

ADDR	Bit	Name	Type	Default
0x06	7:4	RESERVED	R	4'b0000
0x06	3:0	**CMWTAP[3:0]**	R/W	4'b**1**000
		Communication Watchdog Timer Tap Point Code = CLK_SEL=1 Duration, CLK_SEL=0 Duration 0000 = 4.096ms, 8.192ms 0001 = 8.192ms, 16.384ms 0010 = 16.384ms, 32.768ms 0011 = 32.768ms, 65.536ms 0100 = 65.536ms, 131.072ms 0101 = 131.072ms, 262.144ms 0110 = 262.144ms, 524.288ms 0111 = 524.288ms, 1048.576ms 1000-1111 = 1048.576ms, 2097.152ms [Default]		

PWM Dimming Frequency Register

The PWMTICK register sets the PWM dimming frequency. The PTBASE[1:0] and PTCNT[5:0] dividers are cascaded together to create the total clock divider from the system clock. The divided down PWM clock counts each step (TCNT) of the 10-bit PWM counter

Table 13. PWMTICK Register (Address 0x07)

ADDR	Bit	Name	Type	Default
0x07	7:6	PTBASE[1:0]	R/W	2'b00
		DIV1 Primary (base) CLK divider for PWM Clock 00 = ÷1 [Default] 01 = ÷50 10 = ÷125 11 = ÷200		
0x07	5:0	**PTCNT[5:0]**	R/W	5'b**1 11**00
		DIV2 Secondary CLK divider for PWM Clock Refer to Table 14 for PTCNT mapping. 0x1C = ÷32 [Default] PWMCLK = CLK ÷ DIV1 ÷ DIV2 PWM Dimming Frequency = PWMCLK ÷ 1024		

Table 14. PTCNT Mapping of the Secondary Divider (DIV2)

PTCNT	DIV2	PTCNT	DIV2	PTCNT	DIV2	PTCNT	DIV2
0x00	÷2	0x10	÷20	0x20	÷36	0x30	÷53
0x01	÷3	0x11	÷21	0x21	÷37	0x31	÷54
0x02	÷4	0x12	÷22	0x22	÷38	0x32	÷55
0x03	÷6	0x13	÷23	0x23	÷39	0x33	÷56
0x04	÷8	0x14	÷24	0x24	÷40	0x34	÷57
0x05	÷9	0x15	÷25	0x25	÷41	0x35	÷58
0x06	÷10	0x16	÷26	0x26	÷42	0x36	÷59
0x07	÷11	0x17	÷27	0x27	÷43	0x37	÷60
0x08	÷12	0x18	÷28	0x28	÷44	0x38	÷62

Table 14. PTCNT Mapping of the Secondary Divider (DIV2)

PTCNT	DIV2	PTCNT	DIV2	PTCNT	DIV2	PTCNT	DIV2
0x09	÷13	0x19	÷29	0x29	÷45	0x39	÷63
0x0A	÷14	0x1A	÷30	0x2A	÷46	0x3A	÷65
0x0B	÷15	0x1B	÷31	0x2B	÷47	0x3B	÷68
0x0C	÷16	**0x1C**	**÷32**	0x2C	÷49	0x3C	÷71
0x0D	÷17	0x1D	÷33	0x2D	÷50	0x3D	÷74
0x0E	÷18	0x1E	÷34	0x2E	÷51	0x3E	÷78
0x0F	÷19	0x1F	÷35	0x2F	÷52	0x3F	÷85

Open Threshold Register

The OPENTH register sets the Open detection threshold of each switch bank.

Table 15. OPENTH Registers (Address 0x08)

ADDR	Bit	Name	Type	Default
0x08	7:6	**OPENTH16_13[1:0]**	R/W	2'b**11**
		Analog Open Detection Threshold for Bank 4, LED13 – LED16		
0x08	5:4	**OPENTH12_09[1:0]**	R/W	2'b**11**
		Analog Open Detection Threshold for Bank 3, LED9 – LED12		
0x08	3:2	**OPENTH08_05[1:0]**	R/W	2'b**11**
		Analog Open Detection Threshold for Bank 2, LED5 – LED8		
0x08	1:0	**OPENTH04_01[1:0]**	R/W	2'b**11**
		Analog Open Detection Threshold for Bank 1, LED1 – LED4 FLT_OPEN_OR_DRVx is set if voltage across LEDx exceeds the configured threshold. 00 = 4.5V 01 = 9V 10 = 13.5V 11 = 18V [Default]		

Set LED Off Registers

The SET_LED_OFF register sets 16 LEDs disable

Table 16. SET_LED_OFFx Registers (Address 0x09 to 0x0A)

ADDR	Bit	Name	Type	Default
0x09	7:0	SET_LED_OFF[8:1]	R/W	8'b0000 0000
		Set LED Off, LED 1 through 8 (bitwise)		
0x0A	7:0	SET_LED_OFF[16:9]	R/W	8'b0000 0000
		Set LED Off, LED 9 through 16 (bitwise). 0 = Normal operation. [Default] LED state is set by its corresponding PHASE and WIDTH configuration. Upon unsetting this bit, LED state is kept off until the start of the programmed LED on-time configured by PSON, PHASE and WIDTH 1 = Set LED to off state. LED state is turned off immediately.		

CONFIDENTIAL

Individual LED Mapped Phase Registers

Mapped to individual registers for 16 switches grouped by eight most significant bits (MSBs) and two least significant bits (LSBs) of the 10-bit LED turn-off or turn-on time (TCNT value where LED state transitions).

If PSON=0, LED turns off when TCNT = PHASE.
If PSON=1, LED turns on when TCNT = PHASE.

New PHASE values are loaded into PWM control logic at the start of their originally programmed LED off-time, or at their originally programmed PHASE if pulse widths are currently set for 100%.

Table 17. PHASEx LED Mapped Registers (Address 0x15 to 0x28)

ADDR	Bit	Name	Type	Default
0x15	7:0	PHASE01[9:2]	R/W	8'b0000 0000
0x16	7:0	PHASE02[9:2]	R/W	8'b0000 0000
0x17	7:0	PHASE03[9:2]	R/W	8'b0000 0000
0x18	7:0	PHASE04[9:2]	R/W	8'b0000 0000
0x19	7:0	PHASE05[9:2]	R/W	8'b0000 0000
0x1A	7:0	PHASE06[9:2]	R/W	8'b0000 0000
0x1B	7:0	PHASE07[9:2]	R/W	8'b0000 0000
0x1C	7:0	PHASE08[9:2]	R/W	8'b0000 0000
0x1D	7:0	PHASE09[9:2]	R/W	8'b0000 0000
0x1E	7:0	PHASE10[9:2]	R/W	8'b0000 0000
0x1F	7:0	PHASE11[9:2]	R/W	8'b0000 0000
0x20	7:0	PHASE12[9:2]	R/W	8'b0000 0000
0x21	7:0	PHASE13[9:2]	R/W	8'b0000 0000
0x22	7:0	PHASE14[9:2]	R/W	8'b0000 0000
0x23	7:0	PHASE15[9:2]	R/W	8'b0000 0000
0x24	7:0	PHASE16[9:2]	R/W	8'b0000 0000
0x25	7:6	PHASE04[1:0]	R/W	2'b00
0x25	5:4	PHASE03[1:0]	R/W	2'b00
0x25	3:2	PHASE02[1:0]	R/W	2'b00
0x25	1:0	PHASE01[1:0]	R/W	2'b00
0x26	7:6	PHASE08[1:0]	R/W	2'b00
0x26	5:4	PHASE07[1:0]	R/W	2'b00
0x26	3:2	PHASE06[1:0]	R/W	2'b00
0x26	1:0	PHASE05[1:0]	R/W	2'b00
0x27	7:6	PHASE12[1:0]	R/W	2'b00
0x27	5:4	PHASE11[1:0]	R/W	2'b00
0x27	3:2	PHASE10[1:0]	R/W	2'b00
0x27	1:0	PHASE09[1:0]	R/W	2'b00

Table 17. PHASEx LED Mapped Registers (Address 0x15 to 0x28)

ADDR	Bit	Name	Type	Default
0x28	7:6	PHASE16[1:0]	R/W	2'b00
0x28	5:4	PHASE15[1:0]	R/W	2'b00
0x28	3:2	PHASE14[1:0]	R/W	2'b00
0x28	1:0	PHASE13[1:0]	R/W	2'b00

Individual LED Mapped Pulse Width Registers

Mapped to individual resistors for 16 switches grouped by eight most significant bits (MSBs) and two least significant bits (LSBs) of the 10-bit LED on-time.

Table 18. PSON, PHASE, WIDTH Relationship with LED-ON Pulse

PSON	LED-ON Pulse Start	LED-ON Pulse End
0	TCNT = PHASE – WIDTH	TCNT = PHASE
1	TCNT = PHASE	TCNT = PHASE + WIDTH

Table 19. WIDTH Relationship with LED-ON Pulse Duty Cycle

WIDTH	Duty Cycle
0 – 1022	WIDTH / 1024
1023	100%

New WIDTH values are loaded into PWM control logic at the start of their originally programmed LED off-time, or at their originally programmed PHASE if pulse widths are currently set for 100%.

Bank mapped WIDTH registers are updated accordingly.

Table 20. WIDTHx MSB LED Mapped Registers (Address 0x29 to 0x3C)

ADDR	Bit	Name	Type	Default
0x29	7:0	WIDTH01[9:2]	R/W	8'b0000 0000
0x2A	7:0	WIDTH02[9:2]	R/W	8'b0000 0000
0x2B	7:0	WIDTH03[9:2]	R/W	8'b0000 0000
0x2C	7:0	WIDTH04[9:2]	R/W	8'b0000 0000
0x2D	7:0	WIDTH05[9:2]	R/W	8'b0000 0000
0x2E	7:0	WIDTH06[9:2]	R/W	8'b0000 0000
0x2F	7:0	WIDTH07[9:2]	R/W	8'b0000 0000
0x30	7:0	WIDTH08[9:2]	R/W	8'b0000 0000
0x31	7:0	WIDTH09[9:2]	R/W	8'b0000 0000
0x32	7:0	WIDTH10[9:2]	R/W	8'b0000 0000
0x33	7:0	WIDTH11[9:2]	R/W	8'b0000 0000
0x34	7:0	WIDTH12[9:2]	R/W	8'b0000 0000
0x35	7:0	WIDTH13[9:2]	R/W	8'b0000 0000
0x36	7:0	WIDTH14[9:2]	R/W	8'b0000 0000
0x37	7:0	WIDTH15[9:2]	R/W	8'b0000 0000

CONFIDENTIAL

Table 20. WIDTHx MSB LED Mapped Registers (Address 0x29 to 0x3C)

ADDR	Bit	Name	Type	Default
0x38	7:0	WIDTH16[9:2]	R/W	8'b0000 0000
0x39	7:6	WIDTH04[1:0]	R/W	2'b00
0x39	5:4	WIDTH03[1:0]	R/W	2'b00
0x39	3:2	WIDTH02[1:0]	R/W	2'b00
0x39	1:0	WIDTH01[1:0]	R/W	2'b00
0x3A	7:6	WIDTH08[1:0]	R/W	2'b00
0x3A	5:4	WIDTH07[1:0]	R/W	2'b00
0x3A	3:2	WIDTH06[1:0]	R/W	2'b00
0x3A	1:0	WIDTH05[1:0]	R/W	2'b00
0x3B	7:6	WIDTH12[1:0]	R/W	2'b00
0x3B	5:4	WIDTH11[1:0]	R/W	2'b00
0x3B	3:2	WIDTH10[1:0]	R/W	2'b00
0x3B	1:0	WIDTH09[1:0]	R/W	2'b00
0x3C	7:6	WIDTH16[1:0]	R/W	2'b00
0x3C	5:4	WIDTH15[1:0]	R/W	2'b00
0x3C	3:2	WIDTH14[1:0]	R/W	2'b00
0x3C	1:0	WIDTH13[1:0]	R/W	2'b00

Bank Mapped Phase Registers

An alternative mapping of the PHASE registers, mapped by bank grouped by eight least significant (LSBs) and two most significant bits (MSBs) of the 10-bit LED turn-off or turn-on time (TCNT value where LED state transitions).

New PHASE values are loaded into PWM control logic at the start of their originally programmed LED off-time, or at their originally programmed PHASE if pulse widths are currently set for 100%.

Individual LED mapped PHASE registers are updated accordingly.

Table 21. BANK_PHASE1–4 Mapped Registers (Address 0x3D to 0x41)

ADDR	Bit	Name	Type	Default
0x3D	7:0	BANK_PHASE01[7:0]	R/W	8'b0000 0000
0x3E	7:0	BANK_PHASE02[7:0]	R/W	8'b0000 0000
0x3F	7:0	BANK_PHASE03[7:0]	R/W	8'b0000 0000
0x40	7:0	BANK_PHASE04[7:0]	R/W	8'b0000 0000
0x41	7:6	BANK_PHASE04[9:8]	R/W	2'b00
0x41	5:4	BANK_PHASE03[9:8]	R/W	2'b00
0x41	3:2	BANK_PHASE02[9:8]	R/W	2'b00
0x41	1:0	BANK_PHASE01[9:8]	R/W	2'b00
	Bank 1 Mapped Phase Shift			

Table 22. BANK_PHASE5–8 Mapped Registers (Address 0x42 to 0x46)

ADDR	Bit	Name	Type	Default
0x42	7:0	BANK_PHASE05[7:0]	R/W	8'b0000 0000
0x43	7:0	BANK_PHASE06[7:0]	R/W	8'b0000 0000
0x44	7:0	BANK_PHASE07[7:0]	R/W	8'b0000 0000
0x45	7:0	BANK_PHASE08[7:0]	R/W	8'b0000 0000
0x46	7:6	BANK_PHASE08[9:8]	R/W	2'b00
0x46	5:4	BANK_PHASE07[9:8]	R/W	2'b00
0x46	3:2	BANK_PHASE06[9:8]	R/W	2'b00
0x46	1:0	BANK_PHASE05[9:8]	R/W	2'b00
	Bank 2 Mapped Phase Shift			

Table 23. BANK_PHASE9–12 Mapped Registers (Address 0x47 to 0x4B)

ADDR	Bit	Name	Type	Default
0x47	7:0	BANK_PHASE09[7:0]	R/W	8'b0000 0000
0x48	7:0	BANK_PHASE10[7:0]	R/W	8'b0000 0000
0x49	7:0	BANK_PHASE11[7:0]	R/W	8'b0000 0000
0x4A	7:0	BANK_PHASE12[7:0]	R/W	8'b0000 0000
0x4B	7:6	BANK_PHASE12[9:8]	R/W	2'b00
0x4B	5:4	BANK_PHASE11[9:8]	R/W	2'b00
0x4B	3:2	BANK_PHASE10[9:8]	R/W	2'b00
0x4B	1:0	BANK_PHASE09[9:8]	R/W	2'b00
	Bank 3 Mapped Phase Shift			

Table 24. BANK_PHASE13-16 Mapped Registers (Address 0x4C to 0x50)

ADDR	Bit	Name	Type	Default
0x4C	7:0	BANK_PHASE13[7:0]	R/W	8'b0000 0000
0x4D	7:0	BANK_PHASE14[7:0]	R/W	8'b0000 0000
0x4E	7:0	BANK_PHASE15[7:0]	R/W	8'b0000 0000
0x4F	7:0	BANK_PHASE16[7:0]	R/W	8'b0000 0000
0x50	7:6	BANK_PHASE16[9:8]	R/W	2'b00
0x50	5:4	BANK_PHASE15[9:8]	R/W	2'b00
0x50	3:2	BANK_PHASE14[9:8]	R/W	2'b00
0x50	1:0	BANK_PHASE03[9:8]	R/W	2'b00
	Bank 4 Mapped Phase Shift			

Bank Mapped Pulse Width Registers

An alternative mapping of the WIDTH registers, mapped by bank grouped by eight least significant bits (LSBs) and two most significant bits (MSBs) of the 10-bit LED on-time. Refer to Table 18 and Table 19 in the Individual LED Mapped Pulse Width Registers section for relationship of PSON, PHASE, and WIDTH to the LED-ON pulse.

New WIDTH values are loaded into PWM control logic at the start of their originally programmed LED off-time, or

CONFIDENTIAL

at their originally programmed PHASE if pulse widths are currently set for 100%.

Individual LED mapped WIDTH registers are updated accordingly.

Table 25. BANK_WIDTH1–4 Mapped Registers (Address 0x51 to 0x55)

ADDR	Bit	Name	Type	Default
0x51	7:0	BANK_WIDTH01[7:0]	R/W	8'b0000 0000
0x52	7:0	BANK_WIDTH02[7:0]	R/W	8'b0000 0000
0x53	7:0	BANK_WIDTH03[7:0]	R/W	8'b0000 0000
0x54	7:0	BANK_WIDTH04[7:0]	R/W	8'b0000 0000
0x55	7:6	BANK_WIDTH04[9:8]	R/W	2'b00
0x55	5:4	BANK_WIDTH03[9:8]	R/W	2'b00
0x55	3:2	BANK_WIDTH02[9:8]	R/W	2'b00
0x55	1:0	BANK_WIDTH01[9:8]	R/W	2'b00
	Bank 1 Mapped Pulse Width			

Table 26. BANK_WIDTH5–8 Mapped Registers (Address 0x56 to 0x5A)

ADDR	Bit	Name	Type	Default
0x56	7:0	BANK_WIDTH05[7:0]	R/W	8'b0000 0000
0x57	7:0	BANK_WIDTH06[7:0]	R/W	8'b0000 0000
0x58	7:0	BANK_WIDTH07[7:0]	R/W	8'b0000 0000
0x59	7:0	BANK_WIDTH08[7:0]	R/W	8'b0000 0000
0x5A	7:6	BANK_WIDTH08[9:8]	R/W	2'b00
0x5A	5:4	BANK_WIDTH07[9:8]	R/W	2'b00
0x5A	3:2	BANK_WIDTH06[9:8]	R/W	2'b00
0x5A	1:0	BANK_WIDTH05[9:8]	R/W	2'b00
	Bank 2 Mapped Pulse Width			

Table 27. BANK_WIDTH9–12 Mapped Registers (Address 0x5B to 0x5F)

ADDR	Bit	Name	Type	Default
0x5B	7:0	BANK_WIDTH09[7:0]	R/W	8'b0000 0000
0x5C	7:0	BANK_WIDTH10[7:0]	R/W	8'b0000 0000
0x5D	7:0	BANK_WIDTH11[7:0]	R/W	8'b0000 0000
0x5E	7:0	BANK_WIDTH12[7:0]	R/W	8'b0000 0000
0x5F	7:6	BANK_WIDTH12[9:8]	R/W	2'b00
0x5F	5:4	BANK_WIDTH11[9:8]	R/W	2'b00
0x5F	3:2	BANK_WIDTH10[9:8]	R/W	2'b00
0x5F	1:0	BANK_WIDTH09[9:8]	R/W	2'b00
	Bank 3 Mapped Pulse Width			

Table 28. BANK_WIDTH13–16 Mapped Registers (Address 0x60 to 0x64)

ADDR	Bit	Name	Type	Default
0x60	7:0	BANK_WIDTH13[7:0]	R/W	8'b0000 0000
0x61	7:0	BANK_WIDTH14[7:0]	R/W	8'b0000 0000
0x62	7:0	BANK_WIDTH15[7:0]	R/W	8'b0000 0000
0x63	7:0	BANK_WIDTH16[7:0]	R/W	8'b0000 0000

Table 28. BANK_WIDTH13–16 Mapped Registers (Address 0x60 to 0x64)

ADDR	Bit	Name	Type	Default
0x64	7:6	BANK_WIDTH16[9:8]	R/W	2'b00
0x64	5:4	BANK_WIDTH15[9:8]	R/W	2'b00
0x64	3:2	BANK_WIDTH14[9:8]	R/W	2'b00
0x64	1:0	BANK_WIDTH13[9:8]	R/W	2'b00
	Bank 4 Mapped Pulse Width			

LED ON-time ADC Threshold Registers

The LEDONTH registers set the valid voltage range of the LEDs across the switch during an LED on-time (switch open). If an LED voltage measurement in the VLEDON register is above the value set by LEDONTHxH bits or below the value set by the LEDONTHxL bits, the VLED_ERR bit in the STATUS register is set

Table 29. LED ON ADC Threshold Registers (Address 0x70 to 0x7F)

ADDR	Bit	Name	Type	Default
0x70	7:4	LEDONTH01H[3:0]	R/W	4'b0000
0x70	3:0	LEDONTH01L[3:0]	R/W	4'b0000
0x71	7:4	LEDONTH02H[3:0]	R/W	4'b0000
0x71	3:0	LEDONTH02L[3:0]	R/W	4'b0000
0x72	7:4	LEDONTH03H[3:0]	R/W	4'b0000
0x72	3:0	LEDONTH03L[3:0]	R/W	4'b0000
0x73	7:4	LEDONTH04H[3:0]	R/W	4'b0000
0x73	3:0	LEDONTH04L[3:0]	R/W	4'b0000
0x74	7:4	LEDONTH05H[3:0]	R/W	4'b0000
0x74	3:0	LEDONTH05L[3:0]	R/W	4'b0000
0x75	7:4	LEDONTH06H[3:0]	R/W	4'b0000
0x75	3:0	LEDONTH06L[3:0]	R/W	4'b0000
0x76	7:4	LEDONTH07H[3:0]	R/W	4'b0000
0x76	3:0	LEDONTH07L[3:0]	R/W	4'b0000
0x77	7:4	LEDONTH08H[3:0]	R/W	4'b0000
0x77	3:0	LEDONTH08L[3:0]	R/W	4'b0000
0x78	7:4	LEDONTH09H[3:0]	R/W	4'b0000
0x78	3:0	LEDONTH09L[3:0]	R/W	4'b0000
0x79	7:4	LEDONTH10H[3:0]	R/W	4'b0000
0x79	3:0	LEDONTH10L[3:0]	R/W	4'b0000
0x7A	7:4	LEDONTH11H[3:0]	R/W	4'b0000
0x7A	3:0	LEDONTH11L[3:0]	R/W	4'b0000
0x7B	7:4	LEDONTH12H[3:0]	R/W	4'b0000
0x7B	3:0	LEDONTH12L[3:0]	R/W	4'b0000
0x7C	7:4	LEDONTH13H[3:0]	R/W	4'b0000
0x7C	3:0	LEDONTH13L[3:0]	R/W	4'b0000
0x7D	7:4	LEDONTH14H[3:0]	R/W	4'b0000
0x7D	3:0	LEDONTH14L[3:0]	R/W	4'b0000

CONFIDENTIAL

Table 29. LED ON ADC Threshold Registers (Address 0x70 to 0x7F)

ADDR	Bit	Name	Type	Default
0x7E	7:4	LEDONTH15H[3:0]	R/W	4'b0000
0x7E	3:0	LEDONTH15L[3:0]	R/W	4'b0000
0x7F	7:4	LEDONTH16H[3:0]	R/W	4'b0000
	LED ON ADC High Threshold Specifies high threshold between 4 V to 18 V in 1V increment. If LEDADCEN=1, FAULT_LEDONx is set if VLEDONx rises above this threshold. Refer to Table 30 for VLEDON High Threshold settings.			
0x7F	3:0	LEDONTH16L[3:0]	R/W	4'b0000
	LED ON ADC Low Threshold Specifies low threshold between 1V to 15V in 1V increment. If LEDADCEN=1, FAULT_LEDONx is set if VLEDONx falls below this threshold. Refer to Table 31 for VLEDON Low Threshold settings.			

Table 30. LED ON ADC High Thresholds

LEDONTHxH[3:0]	VLEDON	Voltage
0x0 [Default]	High Threshold Disabled	
0x1	0x33	4V
0x2	0x40	5V
0x3	0x4C	6V
0x4	0x59	7V
0x5	0x66	8V
0x6	0x73	9V
0x7	0x80	10V
0x8	0x8C	11V
0x9	0x99	12V
0xA	0xA6	13V
0xB	0xB3	14V
0xC	0xC0	15V
0xD	0xCC	16V
0xE	0xD9	17V
0xF	0xE6	18V

Table 31. LED ON ADC Low Thresholds

LEDONTHxL[3:0]	VLEDON	Voltage
0x0 [Default]	Low Threshold Disabled	
0x1	0x0D	1V
0x2	0x1A	2V
0x3	0x27	3V
0x4	0x34	4V
0x5	0x41	5V
0x6	0x4D	6V
0x7	0x5A	7V
0x8	0x67	8V
0x9	0x74	9V
0xA	0x81	10V
0xB	0x8D	11V
0xC	0x9A	12V
0xD	0xA7	13V
0xE	0xB4	14V
0xF	0xC1	15V

Table 31. LED ON ADC Low Thresholds

LEDONTHxL[3:0]	VLEDON	Voltage
0xE	0xB4	14V
0xF	0xC1	15V

ADC Reference selection register

The ADCREFSEL register is to select ADC reference for BGR, ADC1, ADC2 and CS ADC channel.

Table 32. ADCREFSEL Register (Address 0x80)

ADDR	Bit	Name	Type	Default
0x80	7:4	RESERVED	R	4'b0000
0x80	3	BGRREF	R/W	1'b0
	BGR ADC Channel Reference Selection 0 = BGR ADC reference is internal 2V [Default] 1 = BGR ADC reference is VDD/2.5			
0x80	2	**ADC1REF**	R/W	1'b**1**
	ADC1 ADC Channel Reference Selection 0 = ADC1 ADC reference is internal 2V 1 = ADC1 ADC reference is VDD/2.5 [Default]			
0x80	1	**ADC2REF**	R/W	1'b**1**
	ADC2 ADC Channel Reference Selection 0 = ADC2 ADC reference is internal 2V 1 = ADC2 ADC reference is VDD/2.5 [Default]			
0x80	0	CSREF	R/W	1'b0
	CS ADC Channel Reference Selection 0 = CS ADC reference is internal 2V [Default] 1 = CS ADC reference is VDD/2.5			

Software SYNC Register

The Software SYNC register is used to trigger a one time software synchronization. It is recommended to write this register through Broadcast command.

Table 33. SSYNC Register (Address 0x83)

ADDR	Bit	Name	Type	Default
0x83	7:1	RESERVED	R	7'b0000 000
0x83	0	SSYNC	W	1'b0
	Software SYNC 0 = No effect. Reading this bit always returns 0. [Default] 1 = Setting this bit creates a one-time reset of PWM counter (TCNT = 0)			

Status Registers

The STATUS1 and STATUS2 registers report the status of various items including: ADC error, LDO OV Fault, FS pin status, Device Operating mode, VDD OV Fault, PWM error, Charge pump error, VLED error, TRIM Error, Thermal waring, Thermal limit and power cycle status.

CONFIDENTIAL

Table 34. STATUS1 Register (Address 0x84)

ADDR	Bit	Name	Type	Default
0x84	7:6	RESERVED	R	3'b00
0x84	5	SYNC_OK	R	1'b0
	Receiving SYNC OK Status 0 = Device received SYNC pulse high duration more than +/- 6.25% of PWM register configuration. It means PWM frequency is not synced to Master from abnormal SYNC pin pulse. 1 = Device received SYCN pulse high duration within +/- 6.25% of PWM register configuration. It tells Device is synced to Mater.			
0x84	4	AREGFAIL	R/C	1'b0
	Latched indication that a parity error has occurred in at least one of the ADC measurement registers (addresses 0x86 to 0x8A, 0x98 to 0xB7) Read to clear status			
0x84	3	LDO_OV_FLT	R/C	1'b0
	LDO Over-Voltage Fault Status 0 = No LDO OV fault occurred since last clear 1 = LDO OV fault has occurred since last clear Read to clear status.			
0x84	2	FS_PIN	R	1'b0
	FS Pin Status FS pin voltage is sampled and latched at startup 0 = FS pin low, all switches off (LEDs on) in FAILSAFE operating mode 1 = FS pin high, all switches on (LEDs off) in FAILSAFE operating mode			
0x84	1:0	**OP_MODE[1:0]**	R	2'b**10**
	Operating Mode Indicator 00 = NORMAL Mode 01 = FAIL-SAFE (CMW Timer timed out) 10 = DIAG1 11 = DIAG2 (Reduced CMW timer timed out) Bit 0 indicates that the CMW Timer had timed out.			

Table 35. STATUS2 Register (Address 0x85)

ADDR	Bit	Name	Type	Default
0x85	7	VDD_OV_FLT	R/C	1'b0
	VDD Over-Voltage Fault Status 0 = No VDD OV fault occurred since last clear 1 = VDD OV fault has occurred since last clear Read to clear status.			
0x85	6	PWM_ERR	R/C	1'b0
	PWM Error Status If PWM_ERR is set, read PWM_MISCOUNT registers for which channel encountered the event. 0 = No PWM error event has been detected (PWM MISCOUNT = 0) since last clear 1 = A PWM error has occurred in one of the channels (PWM MISCOUNT non-zero) since last clear *This bit is cleared after reading this bit when PWM_MISCOUNT(0x96, 0x97) registers are 0x00*			

Table 35. STATUS2 Register (Address 0x85)

ADDR	Bit	Name	Type	Default
0x85	5	CHPMP_ERR	R/C	1'b0
	Charge Pump Under Voltage Error Status 0 = No charge pump output voltage error event has occurred since last clear 1 = A charge pump output voltage error event has occurred since last clear Read to clear status			
0x85	4	VLED_ERR	R/C	1'b0
	LED_ON Voltage Threshold Error Status VLED_ERR is an OR of all 16 FLT_LEDON registers. If VLED_ERR=1, read FLT_LEDON registers for which LED encountered the event and read the VLEDON registers for the current LED ON Voltage. 0 = No LED_ON voltage threshold events (all VLEDONx within range) has occurred since last clear 1 = An LED_ON voltage threshold event (a VLEDONx outside range) has occurred since last clear *This bit is cleared after reading this bit when FLT_LEDON(0x94, 0x95) registers are 0x00*			
0x85	3	TRIM_ERR	R/C	1'b0
	Trim Error Status 0 = No trim error event has detected since last clear 1 = A trim error event has detected since last clear Read to clear status			
0x85	2	TW	R/C	1'b0
	Thermal Warning Status If Thermal Warning, DIETEMP > TWLMT[7:0] value 0 = No thermal warning has been detected since last clear 1 = A thermal warning has been detected since last clear Read to clear status			
0x85	1	TSD	R/C	1'b0
	Over-Temperature Status An over-temperature event occurs when DIETEMP > 175°C 0 = No over-temperature event has been detected since last clear 1 = An over-temperature event has been detected since last clear * If TSD is set, clear status and read again to determine if over-temperature event is still active. Read to clear status			
0x85	0	**PWR**	R/W0C	1'b**1**
	Power Cycle Status 0 = No power cycle event has been detected since last clear 1 = A power cycle event has been detected since last clear Write 0 to clear status.			

CONFIDENTIAL

ADC Registers

The BGR, ADC1, ADC2, CS and DIETEMP ADC registers contain the 8bit ADC value from each ADC channel.

Table 36. BGR ADC Register (Address 0x86)

ADDR	Bit	Name	Type	Default
0x86	7:0	BGR[7:0]	R	8'b0000 0000
	Internal Bandgap Voltage LSB = 2V/256 BGR [V] = BGR[7:0] * 2V / 256 ADC measurement of the internal bandgap voltage reference for continuous latent fault coverage of VDD UVLO and ADC functionality. An 8-bit conversion ratio of 2/256 (V/dec) where a value of 0x9F corresponds to a secondary bandgap voltage of 1.253V.			

Table 37. ADC1/ADC2 Registers (Address 0x87, 0x88)

ADDR	Bit	Name	Type	Default
0x87	7:0	ADC1[7:0]	R	8'b0000 0000
0x88	7:0	ADC2[7:0]	R	8'b0000 0000
	8-bit ADC1 Pin Voltage and ADC2 Pin Voltage LSB = 5V/256 VADCx [V] = ADCx[7:0] * 5V / 256			

Table 38. CS ADC Register (Address 0x89)

ADDR	Bit	Name	Type	Default
0x89	7:0	CS[7:0]	R	8'b0000 0000
	Current Sense Pin Voltage According to CSEN and CSGAIN bits in SYSCFG Register When CSGAIN = 0b, LSB = 5V/256 VCS [V] = CS[7:0] * 5V / 256 LED current [A] = VCS [V] / RSNS [Ω] When CSGAIN = 1b, LSB = 0.5V/256 VCS [V] = CS[7:0] * 0.5V / 256 LED current [A] = VCS [V] / RSNS [Ω]			

Table 39. DIETEMP ADC Register (Address 0x8A)

ADDR	Bit	Name	Type	Default
0x89	7:0	DIETEMP[7:0]	R	8'b0000 0000
	Internal Die Temperature LSB = 1°C Die Temperature [°C] = DIETEMP[7:0] x 1°C- 50°C			

CERRCNT Registers

The CERRCNT register is incremented each time a CRC error occurs in a UART transaction (non-matching CRC in received RX command frame)

Table 40. CERRCNT Register (Address 0x8B)

ADDR	Bit	Name	Type	Default
0x8B	7:0	CERRCNT[7:0]	R/C	8'b0000 0000
	CRC Error Count 00 = no CRC errors have occurred xx = xx CRC errors have occurred			

FLT_OPEN_OR_DRV Registers

FLT_OPEN_OR_DRV registers report LED open faults or switch driver faults depending on the DRV_CHK bit in the OUTCTRL register. Each bit in the FLT_OPEN_OR_DRV register is associated with the status of an individual switch, therefore the 2 registers contain the status of all 16 switches.

Table 41. FLT_OPEN_OR_DRV Registers (Address 0x8C, 0x8D)

ADDR	Bit	Name	Type	Default
0x8C	7:0	FLT_OPEN_OR_DRV[8:1]	R/C	8'b0000 0000
0x8D	7:0	FLT_OPEN_OR_DRV[16:9]	R/C	8'b0000 0000
	Open LED Faults or DRV Check - switches 1 through 16 (bitwise) Open LED (DRV_CHK = 0): 0 = an LED open fault has not occurred 1 = an LED open fault has occurred Driver Check (DRV_CHK = 1): 0 = LED driver not healthy or passive gate pull-down not present. 1 = LED driver and passive gate pull-down is present			

FLT_SHORT Registers

The FLT_SHORT registers report LED short faults. Each bit in the FLT_SHORT register is associated with the status of an individual switch, therefore the 2 registers contain the status of all 16 switches.

Table 42. FLT_SHORT Registers (Address 0x8E, 0x8F)

ADDR	Bit	Name	Type	Default
0x8E	7:0	FLT_SHORT[8:1]	R/C	8'b0000 0000
0x8F	7:0	FLT_SHORT[16:9]	R/C	8'b0000 0000
	LED Short Fault - switches 1 through 16 (bitwise) 0 = an LED short fault has not occurred 1 = an LED short fault has occurred If the differential voltage is below the VTH_SHORT threshold just prior to the end of the LED ON pulse (that is, TCNT = PHASE for PSON = 0 or TCNT = PHASE + WIDTH for PSON = 1), or when TCNT = PHASE if WIDTH = 1023, the corresponding bit is set and latched in the FAULT_SHORT register.			

FLT_RESFET Registers

The FLT_RESFET registers report resistive switch faults (i.e. switch resistance is too high in the on-state). Each

CONFIDENTIAL

bit in the FLT_RESFET register is associated with the status of an individual switch, therefore the 2 registers contain the status of all 16 switches.

Table 43. FLT_RESFET Registers (Address 0x90, 0x91)

ADDR	Bit	Name	Type	Default
0x90	7:0	FLT_RESFET[8:1]	R/C	8'b0000 0000
0x91	7:0	FLT_RESFET[16:9]	R/C	8'b0000 0000
	Resistive Switch Fault - switches 1 through 16 (bitwise) 0 = a resistive FET fault has not occurred 1 = a resistive FET fault has occurred If the differential voltage is above the VTH-SHORT threshold just prior to the end of the LED OFF pulse (that is, TCNT = PHASE - WIDTH for PSON = 0 or TCNT = PHASE for PSON = 1), or when TCNT = PHASE if WIDTH=0, the corresponding bit is set and latched in the FAULT_RESFET register.			

FLT_MATRIX_POR Registers

The FLT_MATRIX_POR registers report the switch floating supply is below 2.5V typ, so that the switch is off. Each bit in the FLT_ MATRIX_POR register is associated with the status of an individual switch; therefore the 2 registers contain the status of all 16 switches.

Table 44. FLT_MATRIX_POR Registers (Address 0x92, 0x93)

ADDR	Bit	Name	Type	Default
0x92	7:0	SW_POR_N[8:1]	R/C	8'b0000 0000
0x93	7:0	SW_POR_N[16:9]	R/C	8'b0000 0000
	MATRIX Switch POR status - switches 1 through 16 (bitwise) 0 = a Matrix Switch POR fault has not occurred 1 = a Matrix Switch POR fault has occurred			

FLT_LEDON Registers

The FLT_LEDON registers report LED ON voltage faults. Each bit in the FLT_LEDON register is associated with the status of an individual switch, therefore the 2 registers contain the status of all 16 switches

Table 45. FLT_LEDON Registers (Address 0x94, 0x95)

ADDR	Bit	Name	Type	Default
0x94	7:0	FLT_LEDON[8:1]	R	8'b0000 0000
0x95	7:0	FLT_LEDON[16:9]	R	8'b0000 0000
	FAULT_LEDON[16:1] - LEDx_ON Voltage Fault - switches 1-16 (bitwise). Each status bit is updated after the associated VLEDONxx ADC conversion. 0 = VLEDONx has not exceeded the window set by LEDONTHxH and LEDONTHxL 1 = VLEDONx has exceeded the window set by LEDONTHxH and LEDONTHxL			

PWM_MISCOUNT Registers

The PWM_MISCOUNT registers report switch PWM duty cycle faults. Each bit in the PWM_MISCOUNT register is associated with the status of an individual switch, therefore the 2 registers contain the status of all 16 switches.

Table 46. FLT_MISCOUNT Registers (Address 0x96, 0x97)

ADDR	Bit	Name	Type	Default
0x96	7:0	PWM_MISCOUNT[8:1]	R	8'b0000 0000
0x97	7:0	PWM_MISCOUNT[16:9]	R	8'b0000 0000
	Switch Duty Cycle Fault - switches 1 through 16 (bitwise). Each bit is updated in every PWM cycle 0 = a PWM miscount has not occurred 1 = a PWM miscount has occurred			

VLEDON Registers

The VLEDON registers contain the 8-bit ADC value calculated from the differential voltage across the internal bypass switch when LED is on (the switch is off). The LEDADCEN bit in the SYSCFG register must be set to enable these measurements

Table 47. VLEDON01-16 Registers (Address 0x98 to 0xA7)

ADDR	Bit	Name	Type	Default
0x98	7:0	VLEDON01[7:0]	R	8'b0000 0000
0x99	7:0	VLEDON02[7:0]	R	8'b0000 0000
0x9A	7:0	VLEDON03[7:0]	R	8'b0000 0000
0x9B	7:0	VLEDON04[7:0]	R	8'b0000 0000
0x9C	7:0	VLEDON05[7:0]	R	8'b0000 0000
0x9D	7:0	VLEDON06[7:0]	R	8'b0000 0000
0x9E	7:0	VLEDON07[7:0]	R	8'b0000 0000
0x9F	7:0	VLEDON08[7:0]	R	8'b0000 0000
0xA0	7:0	VLEDON09[7:0]	R	8'b0000 0000
0xA1	7:0	VLEDON10[7:0]	R	8'b0000 0000
0xA2	7:0	VLEDON11[7:0]	R	8'b0000 0000
0xA3	7:0	VLEDON12[7:0]	R	8'b0000 0000
0xA4	7:0	VLEDON13[7:0]	R	8'b0000 0000
0xA5	7:0	VLEDON14[7:0]	R	8'b0000 0000
0xA6	7:0	VLEDON15[7:0]	R	8'b0000 0000
0xA7	7:0	VLEDON16[7:0]	R	8'b0000 0000

CONFIDENTIAL

Table 47. VLEDON01-16 Registers (Address 0x98 to 0xA7)

ADDR	Bit	Name	Type	Default
	LEDxx switch voltage during the LED On-time (switch open) LSB = 20V/256 VLEDxx [V] = VLEDONxx [7:0] *20V/256 This feature is disabled by default. To enable the feature, the LEDADCEN bit must be set in the SYSCFG register. The VLEDON value is sampled at the end of the LED on-time (just prior to switch turn-on). If the programmed on-time is less than 320 oscillator CLK cycles in length, the sample is skipped for that switch.			

VLEDOFF Registers

The VLEDOFF registers contain the 8-bit ADC value calculated from the differential voltage across the internal bypass switch when LED is off (the switch is on). The LEDADCEN bit in the SYSCFG register must be set to enable these measurements

Table 48. VLEDOFF01-16 Registers (Address 0xA8 to 0xB7)

ADDR	Bit	Name	Type	Default
0xA8	7:0	VLEDOFF01[7:0]	R	8'b0000 0000
0xA9	7:0	VLEDOFF02[7:0]	R	8'b0000 0000
0xAA	7:0	VLEDOFF03[7:0]	R	8'b0000 0000
0xAB	7:0	VLEDOFF04[7:0]	R	8'b0000 0000
0xAC	7:0	VLEDOFF05[7:0]	R	8'b0000 0000
0xAD	7:0	VLEDOFF06[7:0]	R	8'b0000 0000
0xAE	7:0	VLEDOFF07[7:0]	R	8'b0000 0000
0xAF	7:0	VLEDOFF08[7:0]	R	8'b0000 0000
0xB0	7:0	VLEDOFF09[7:0]	R	8'b0000 0000
0xB1	7:0	VLEDOFF10[7:0]	R	8'b0000 0000
0xB2	7:0	VLEDOFF11[7:0]	R	8'b0000 0000
0xB3	7:0	VLEDOFF12[7:0]	R	8'b0000 0000
0xB4	7:0	VLEDOFF13[7:0]	R	8'b0000 0000
0xB5	7:0	VLEDOFF14[7:0]	R	8'b0000 0000
0xB6	7:0	VLEDOFF15[7:0]	R	8'b0000 0000
0xB7	7:0	VLEDOFF16[7:0]	R	8'b0000 0000
	LEDxx switch voltage during the LED Off-time (switch closed) LSB = 20V/256 VLEDxx [V] = VLEDOFFxx [7:0] * 20V/256 This feature is disabled by default. To enable the feature, the LEDADCEN bit must be set in the SYSCFG register. The VLEDOFF value is sampled at the end of the LED off-time (just prior to switch turn-off). If the programmed on-time is less than 320 oscillator CLK cycles in length, the sample is skipped for that switch.			

UART_CONFIG Register

The UART_CONFIG register configures UART sampling time, BYTE Timeout enable and BYTE timeout.

Table 49. UART_CONFIG Register (Address 0xD1)

ADDR	Bit	Name	Type	Default
0xD1	7:4	RESERVED	R	4'b0000
0xD1	3	SAMP_SEL	R/W	1'b0
	Select Mid Bit or Make Voting 0 = Incoming RX bit is sampled at 8th cycle [Default] 1 = Incoming RX bit is voted on 7th-8th-9th samples			
0xD1	2	**TO_BYTE_EN**	R/W	1'b**1**
	Enables TO_BYTE error detection 0 = Disabled 1 = Enabled [Default]			
0xD1	1:0	**TO_BYTE_CFG[1:0]**	R/W	2'b0**1**
	Timeout for the incoming bytes 00 = 0.5ms 01 = 1.0ms [Default] 10 = 1.5ms 11 = 2.0ms			

PASSCODE Register

The PASSCODE register is to transition device mode to other mode.

Table 50. PASSCODE Register (Address 0xF1)

ADDR	Bit	Name	Type	Default
0xF1	7:0	PASSCODE[7:0]	W	8'b0000 0000
	PASSCODE - Controls the operational Mode 0x55 = Move to DIAG1 from DIAG2 0xAA = Move to NORMAL			

BAD_PASSCODE_CNT Register

The BAD_PASSCODE_CNT register is incremented each time the PASSCODE does not match.

Table 51. BAD_PASSCODE_CNT Register (Address 0xF2)

ADDR	Bit	Name	Type	Default
0xF2	7:0	BAD_PASSCODE_CNT[7:0]	R/C	8'b0000 0000
	Bad Passcode Count Increments each time an invalid PASSCODE is written to the PASSCODE register. Valid passcode resets register to 0.			

ICID Registers

Table 52. ICID Registers (Address 0xFE, 0xFF)

ADDR	Bit	Name	Type	Default
0xFE	7:0	ICID[7:0]	R	8'b0000 0000
0xFF	7:0	ICID[15:8]	R	8'b0000 0000
	Device ID Register			

CONFIDENTIAL

APPLICATION INFORMATION

Figure 18 shows a typical application with two ID803 devices on one UART bus with CAN transceiver. Each device supports one series string of 16 LEDs. The first device uses both ADC inputs, the CS monitor, SYNC output and single ended Buck current regulator for LED string power. The second device does not use the ADCs or CS monitor, and uses SYNC input from the first ID803 device.

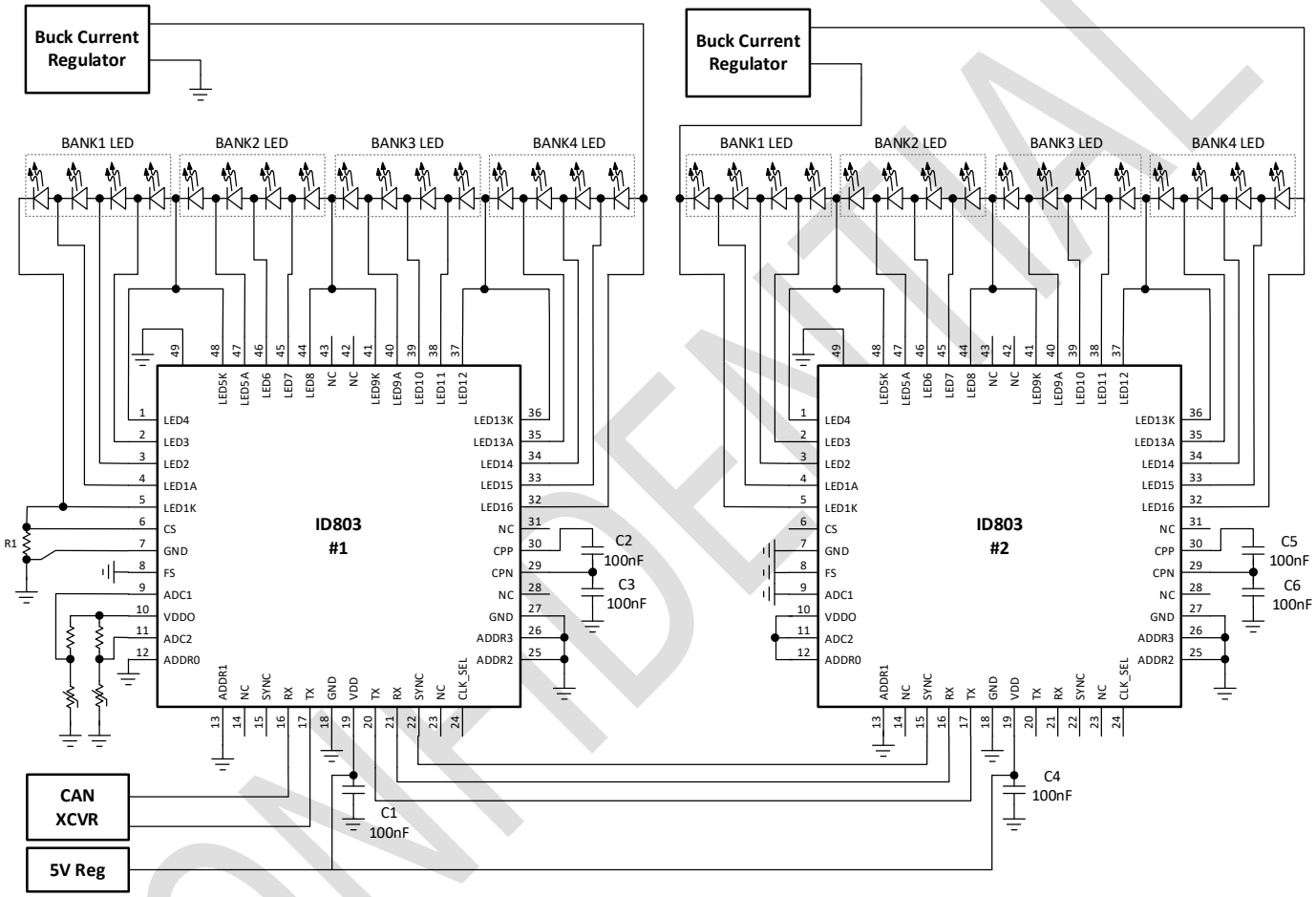

Figure 18 : ID803 Application schematic

CONFIDENTIAL

LAYOUT GUIDELINE

Figure 19 : ID803 Layout

TO Be added

CONFIDENTIAL

PACKAGE OUTLINE DRAWING

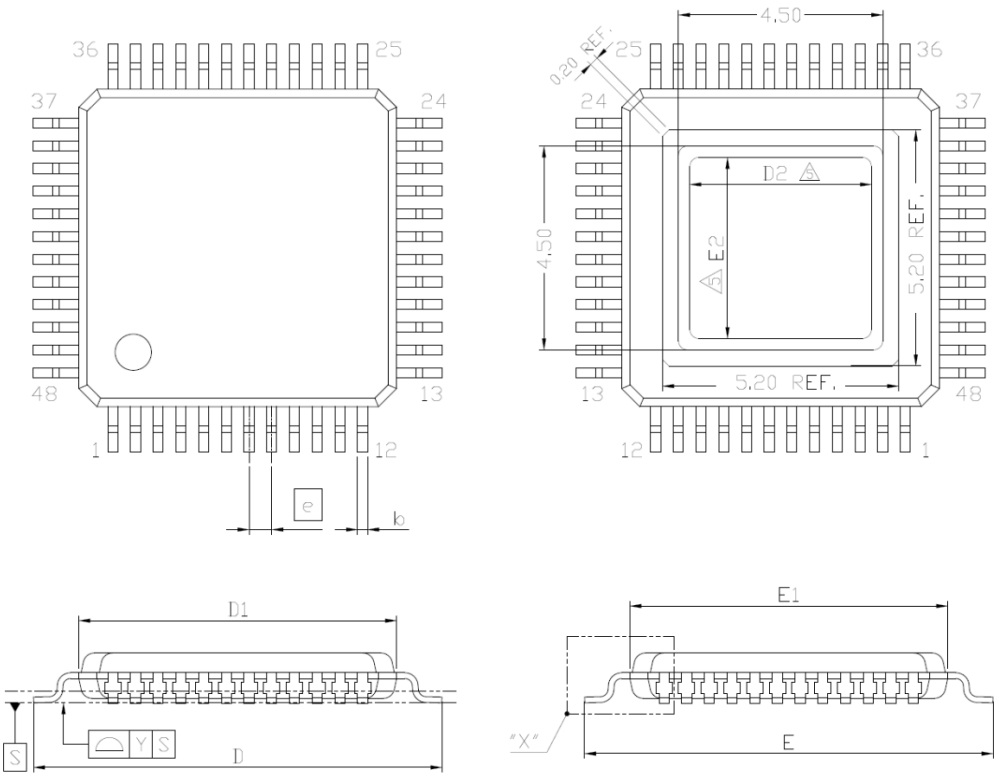

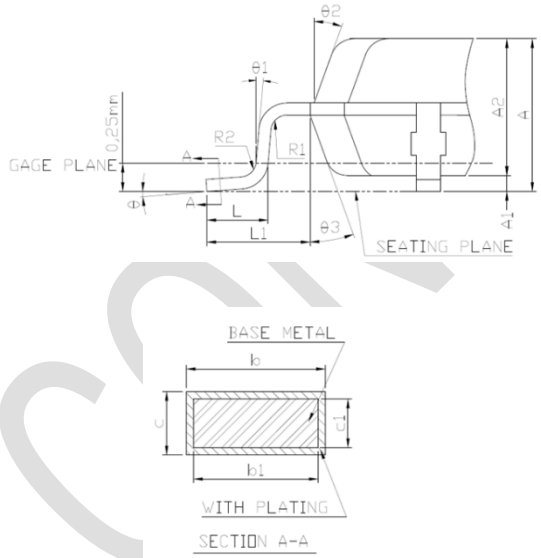

SYMBOL	DIMENSION (MM)			DIMENSION (MIL)		
	MIN.	NOM.	MAX.	MIN.	NOM.	MAX.
A			1.60			63
A1	0.05		0.15	2		6
A2	1.35	1.40	1.45	53	55	57
b	0.17	0.22	0.27	7	9	11
b1	0.17	0.20	0.23	7	8	12
c	0.09		0.20	4		8
c1	0.09		0.16	4		6
D	8.9	9.0	9.1	350	354	358
D1	6.9	7.0	7.1	272	276	280
5 D2	3.9	4.0	4.1	154	157	161
E	8.9	9.0	9.1	350	354	358
E1	6.9	7.0	7.1	272	276	280
5 E2	3.9	4.0	4.1	154	157	161
e	0.50 BSC			20 BSC		
L	0.45	0.60	0.75	18	24	30
L1	1.00 REF			39 REF		
R1	0.08			3		
R2	0.08		0.20	3		8
6 Y			0.075			3
θ	0°	3.5°	7°	0°	3.5°	7°
θ1	0°			0°		
θ2	11°	12°				
θ3	11°	12°	13°	11°	12°	13°

CONFIDENTIAL

REVISION HISTORY

Revision No.	Description	Revision by	Revision Date (MM/DD/YY)
0.1	Initial Release	Dennis	10/18/2024
0.2	Add Table of Contents EC table • CPP to GND typo in AMR: 72V from 10V • Add VCS in Recommended Operating Conditions. • Update Ta in Global conditions : 150C from 125C • Add Charge Pump Current limit : 13/30/46mA • VADC_Range for ADC1/2/CS : VDD-0.2V from VDD • Update VLED Range : 1.8V to 20V from 0.8V to 20V Update VLED accuracy : 1.65V/1.8V/2.05V Description • Update on ADC Round-Robin sequence in ADC • Add UART Communication Reset Description • Add Faults and Diagnostics description Register map • 0x00Reg[7:3] : Reserved • 0x05 Reg default value typo : 0x2A from 0x2D • 0xD0 Reg default value typo : 0x05 from 0x00 • Update EN_VDD_OV description • Update DIETEMP : LSB = 1deg, Update TSD Threshold • Update TO_ECHO bit description • Update Default value : TO_BYTE_EN = 1b, TO_BYTE_CFG = 01b	Dennis	11/04/2024
0.3	Update Pad Finish/MSL Rating in Ordering information EC table • VVDD-OV max : 5.90V from 5.86V • VCP Max : 13V from 10V, ICP_SRC : 3mA/5mA from 2mA • VADC-RNG for ADC1/2/CS: VDD from VDD-0.2V • ADCINL : +/-2 LSB from +/-1LSB Update Faults and Diagnostics table Register map • Add ADC reference selection bits in 0x80 Register • Change UART_STAT type to R/C from R/W0C • Update EN_VDD_OV bit description • Correct Typo in 0x26-0x28, 0x3A-0x3C, 0x5F, 0x64, 0x7E reg	Dennis	11/14/2024
0.31	VCP AMR from 10V to 13V Description • Add LEDONTH in Parallel switch operation (Page 11) Register • Correct Register type (PWM_ERR/VLED_ERR bits : R/C from R, FLT_LEDON/PWM_MISCOUNT : R from R/C)	Dennis	11/22/2024

CONFIDENTIAL

	• Added LEDONTH in PARLED bits description		
0.4	EC table • Add VADC_REF • Update VADC Full range • Add VBGR / VADC1 / VADC2 Description • Update LED fault detection/protection by adding Figure 11 and Driver health check description. • Add BGR ADC description • Add LSB column in Table 1 • Update DEVID byte (bit 5 = DT, 1b for ID803) • Add UART errors description Register • Change ADCREFSEL default from 0x0F to 0x06 • Make UART_STAT register to Reserved • Add LSB in ADC bit description for All ADC registers Add typical application example	Dennis	12/12/2024
0.41	CPP to GND AMR is updated to 75V from 72V Description • Figure 11 / Figure 12 update • Update Driver health check sequence • Denominator in ADC LSB calculation is change to 256 • Update Faults and Diagnostics table • LED ON/OFF ADC skip time change from 160 sys clock to 320 oscillator clock. Register • Add CPFREQSEL and SHRF_FLT in CFG register • Add FLT_MATRIX_POR registers in 0x92/0x93 • Change BGR ADC value to 0xA0 (1.253V)	Dennis	1/14/2024
0.5	EC table • LEDx-LEDx-1 AMR voltage 25V from 20V • Update V_{CPTH_F} , V_{CPTH_R} and V_{TH_SHORT} • Add V_{LED_CLAMP} max to 24V • Update V_{OH}, V_{OL}, I_{SH_HS} and I_{SC_LS} from TBD	Dennis	3/14/2025
0.51	EC table • AMR for VDD/VDDO/ADDRx/ADCx/IO pins to 6V from 5.5V • ARM for TX/SYNC pins to VDD+0.3V from 5.5V Description • Update Figure 11 (LED Fault detection) • Update Table 4 from Fault/diagnostic to Fault reaction. • Change bit name TLMT to TSD	Dennis	3/14/2025
0.52	EC table • Update VOH/VOL when TX_STR = SYNC_STR = 0b, • Update BGR ADC from 150/160/170 to 144/154/164	Dennis	6/17/2025

CONFIDENTIAL

	• Add min/max for SLEW rate (TBD)		
0.53	EC table • Update VTH_SHORT from 0.9V/1.1V to 0.42V/1.36V • Update BGR ADC from 144/154/164 to 150/160/170 • Update ADC1/2 min/max to 120 / 134 Description • Update PWM Dimming description • Add “ACK_EN/SEPTR should be updated through Broadcast command in UART description on page 16 Register map • Add SYNC_OK bit in 0x84 STSTUA1 • Change ACK_EN bit default value to 0b	Dennis	8/26/2025
0.6	EC table • Remove “CPFREQSEL=00b in Charge pump frequency Register map • Remove CPFRQSEL[1:0] bits in 0x00 Reg	Dennis	10/30/2025

IMPORTANT NOTICE

The information given in this document shall in no event be regarded as any warranty or authorization of, express or implied, including but not limited to accuracy, completeness, merchantability, fitness for a particular purpose, or infringement of any third party’s intellectual property rights.

You are solely responsible for your use of Elevation Microsystems’ products and applications, and for the safety thereof. You shall comply with all laws, regulations, and requirements related to Elevation Microsystems’ products and applications, although information or support related to any application may still be provided by Elevation Microsystems.

The resources are intended only for skilled developers designing with Elevation Microsystems’ products. Elevation Microsystems reserves the rights to make corrections, modifications, enhancements, improvements, or other changes to the products and services provided. Elevation Microsystems authorizes you to use these resources exclusively for the development of relevant applications designed to integrate Elevation Microsystems’ products. Using these resources for any other purpose, or any unauthorized reproduction or display of these resources, is strictly prohibited. Elevation Microsystems shall not be liable for any claims, damages, costs, losses, or liabilities arising out of the use of these resources.

For further information on applications, products, and technologies, please contact Elevation Microsystems.

Elevation Microsystems INC.

CONFIDENTIAL