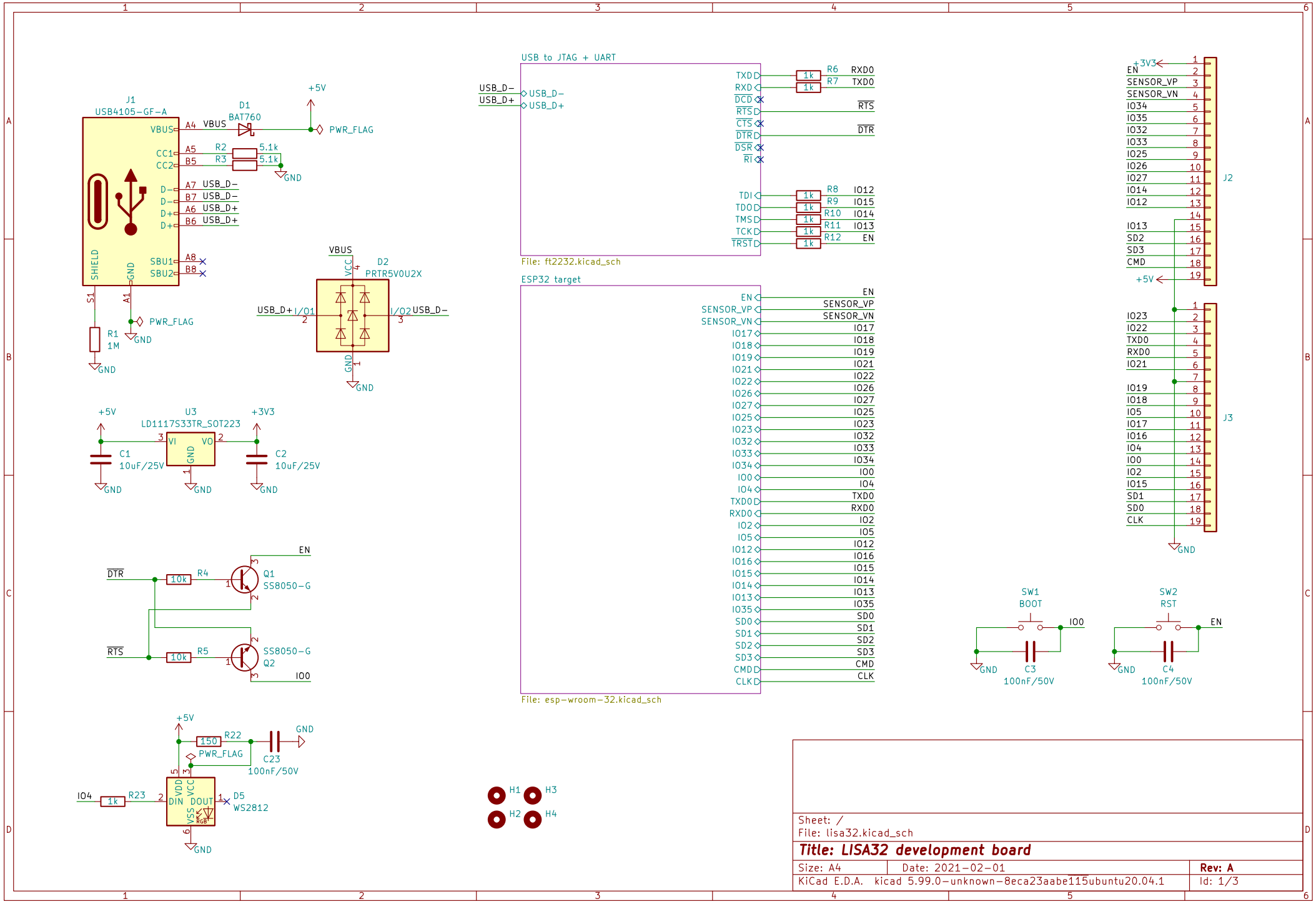

Sheet: /
File: lisa32.kicad_sch

Title: LISA32 development board

Size: A4	Date: 2021-02-01	Rev: A
KiCad E.D.A. kicad 5.99.0-unknown-8eca23aabe115ubuntu20.04.1		Id: 1/3

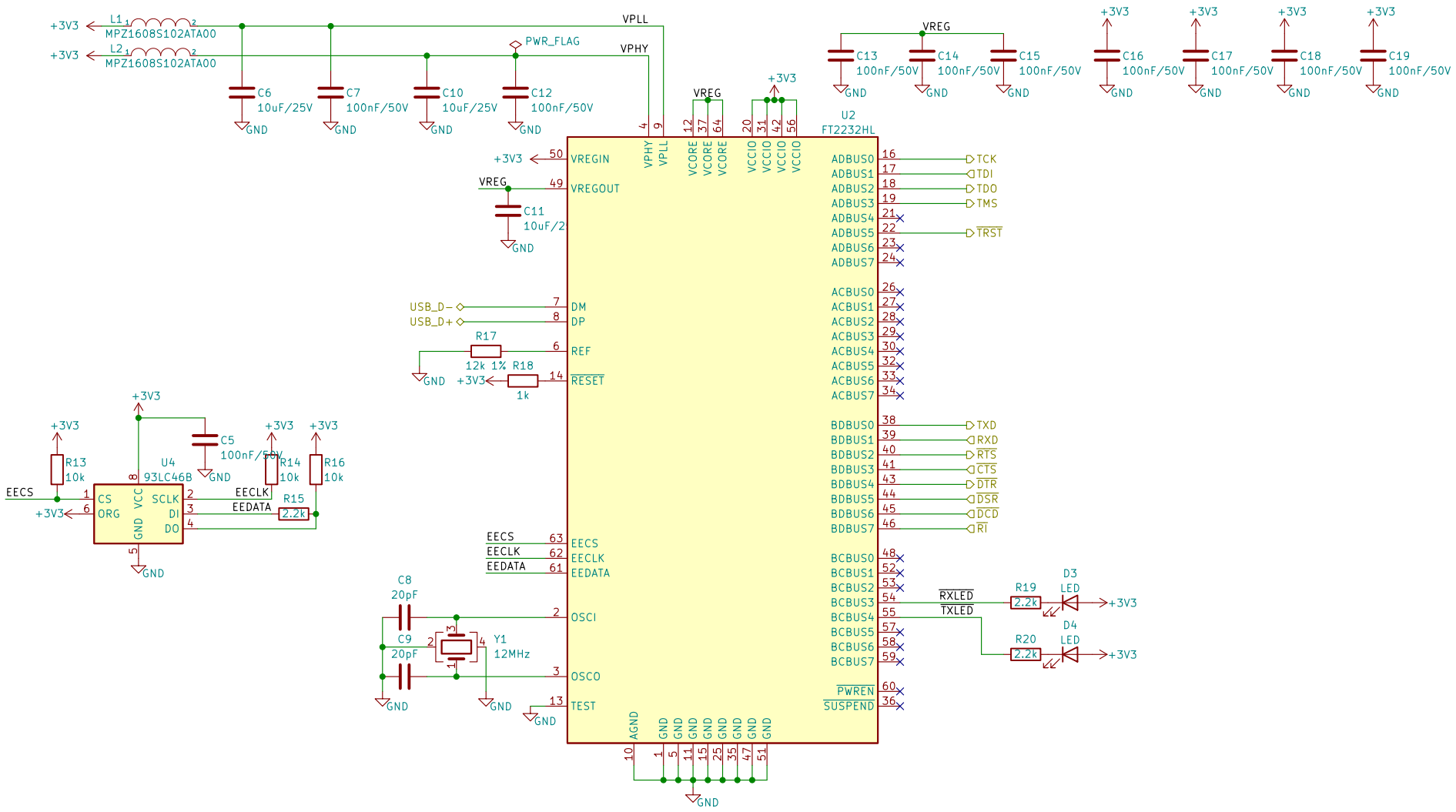

Sheet: /USB to JTAG + UART/
File: ft2232.kicad_sch

Title: LISA32 development board

Size: A4	Date: 2021-02-01	Rev: A
KiCad E.D.A. kicad 5.99.0-unknown-8eca23aabe115ubuntu20.04.1		Id: 2/3

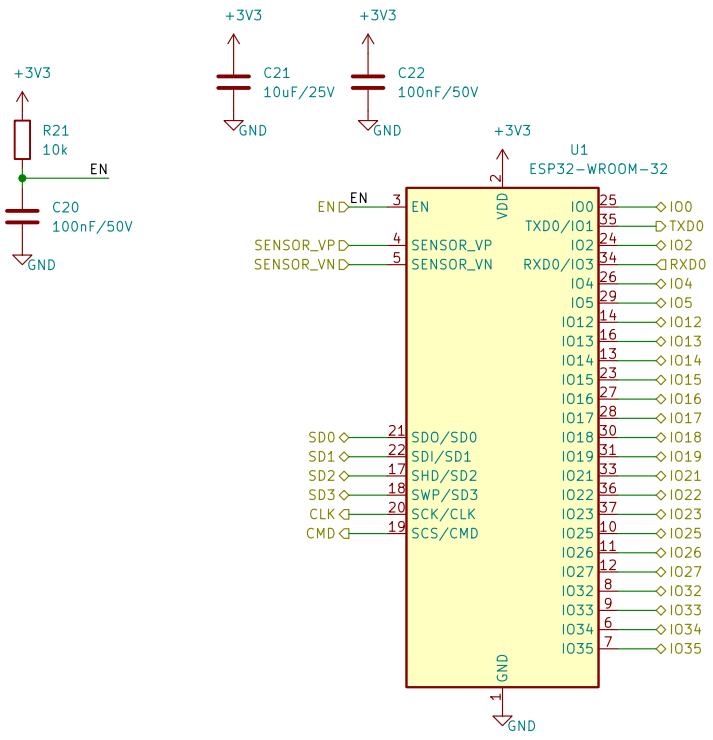

Sheet: /ESP32 target/
File: esp-wroom-32.kicad_sch

Title: LISA32 development board

Size: A4	Date: 2021-02-01	**Rev: A**
KiCad E.D.A. kicad 5.99.0-unknown-8eca23aabe115ubuntu20.04.1		Id: 3/3