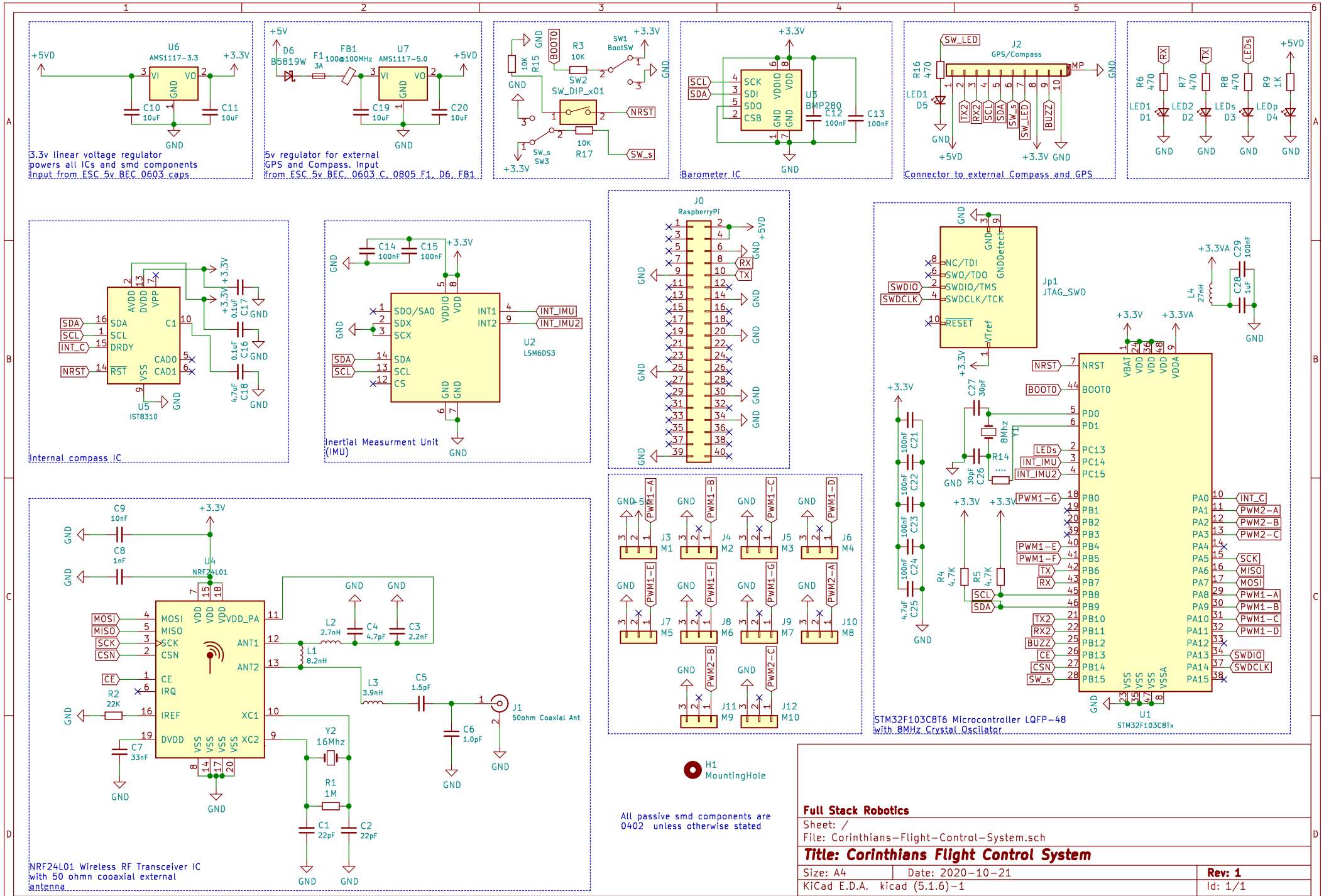
3.3v linear voltage regulator
powers all ICs and smd components
input from ESC 5v BEC 0603 caps
5v regulator for external
GPS and Compass. Input
from ESC 5v BEC, 0603 C, 0805 F1, D6, FB1
Barometer IC
Connector to external Compass and GPS
Internal compass IC
Inertial Measurment Unit
(IMU)
NRF24L01 Wireless RF Transceiver IC
with 50 ohmn cooaxial external
antenna
STM32F103C8T6 Microcontroller LQFP-48
with 8MHz Crystal Oscilator
All passive smd components are
0402 unless otherwise stated
Full Stack Robotics
Sheet: /
File: Corinthians-Flight-Control-System.sch
Title: Corinthians Flight Control System
Size: A4
Date: 2020-10-21
Rev: 1
KiCad E.D.A. kicad (5.1.6)-1
Id: 1/1