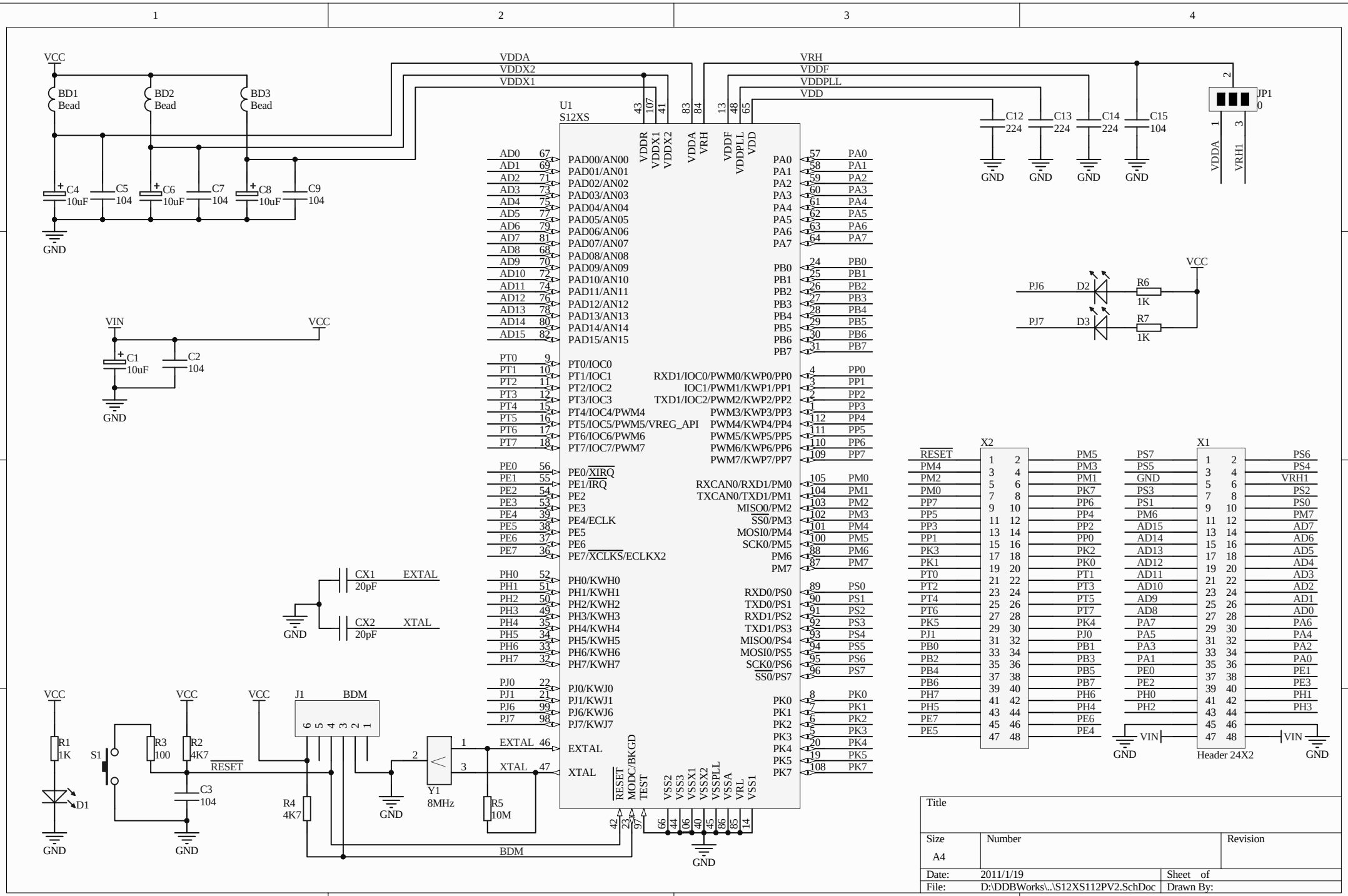
VCC
BD1 Bead
BD2 Bead
BD3 Bead
C4 10uF
C5 104
C6 10uF
C7 104
C8 10uF
C9 104
GND
VDDA
VDDX2
VDDX1
VRH
VDDF
VDDPLL
VDD
U1
S12XS
C12 224
C13 224
C14 224
C15 104
JP1
VDDA
VRH1
VIN
C1 10uF
C2 104
PJ6
PJ7
D2
D3
R6 1K
R7 1K
CX1 20pF
CX2 20pF
EXTAL
XTAL
R1 1K
D1
S1
R3 100
R2 4K7
RESET
C3 104
J1
BDM
R4 4K7
Y1 8MHz
R5 10M
X2
X1
Header 24X2
Title
Size
A4
Number
Revision
Date: 2011/1/19
Sheet of
File: D:\DDBWorks\..\S12XS112PV2.SchDoc
Drawn By: