F.V

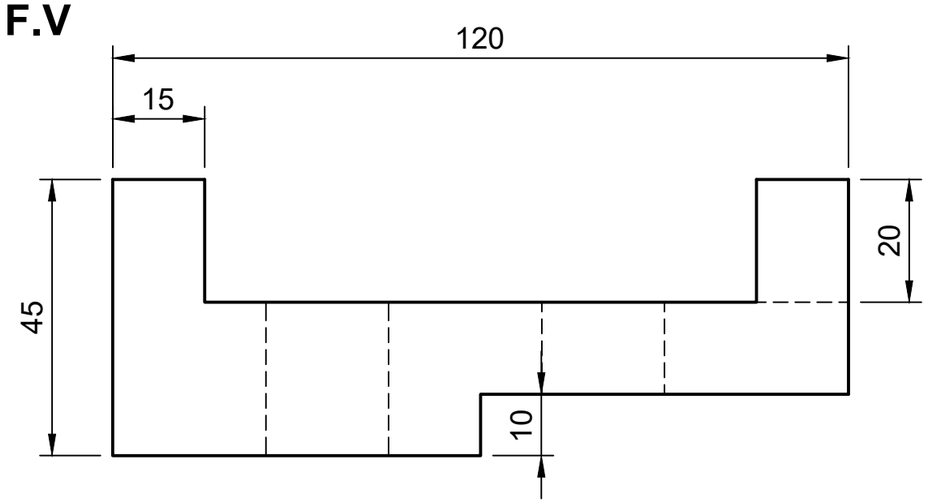

R.H.S.V

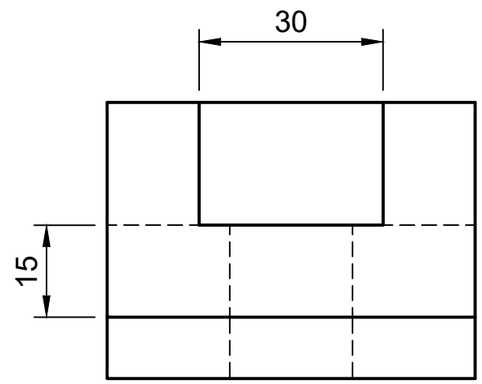

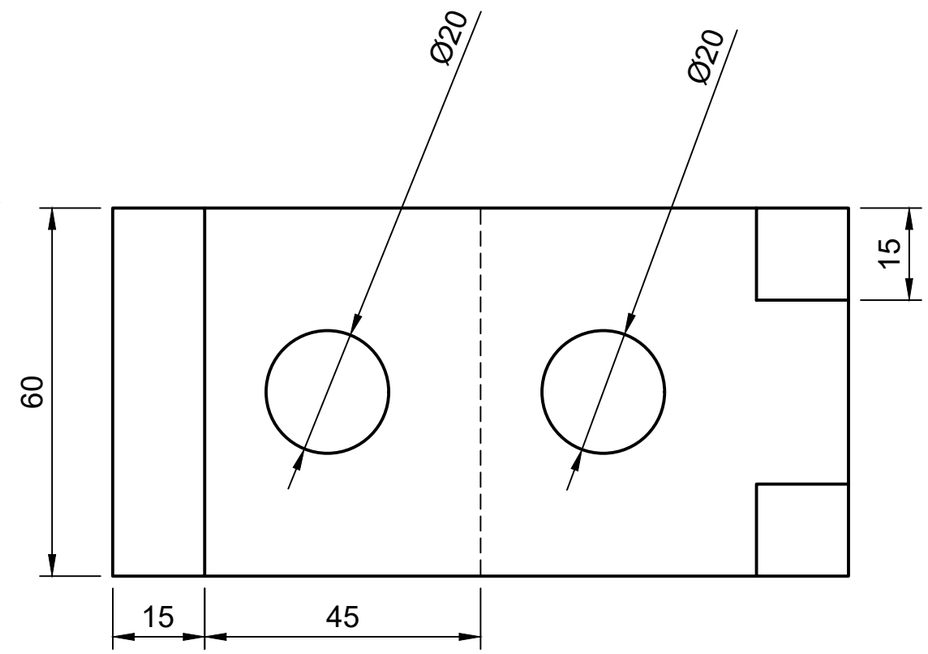

T.V

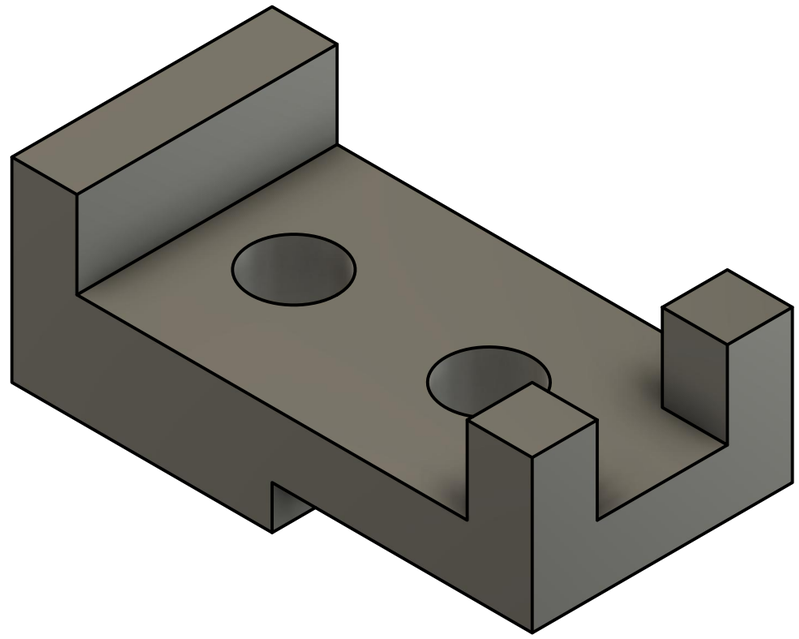

Isometric Drawing

Dept. CSE	Technical reference	Created by Rushik Rathod 07-06-2021	Approved by Nipun Gosai
		Document type Drawing sheet	Document status
		Title Orthographic projection	DWG No. 1/2
			Rev. / Date of issue / Sheet 2/2