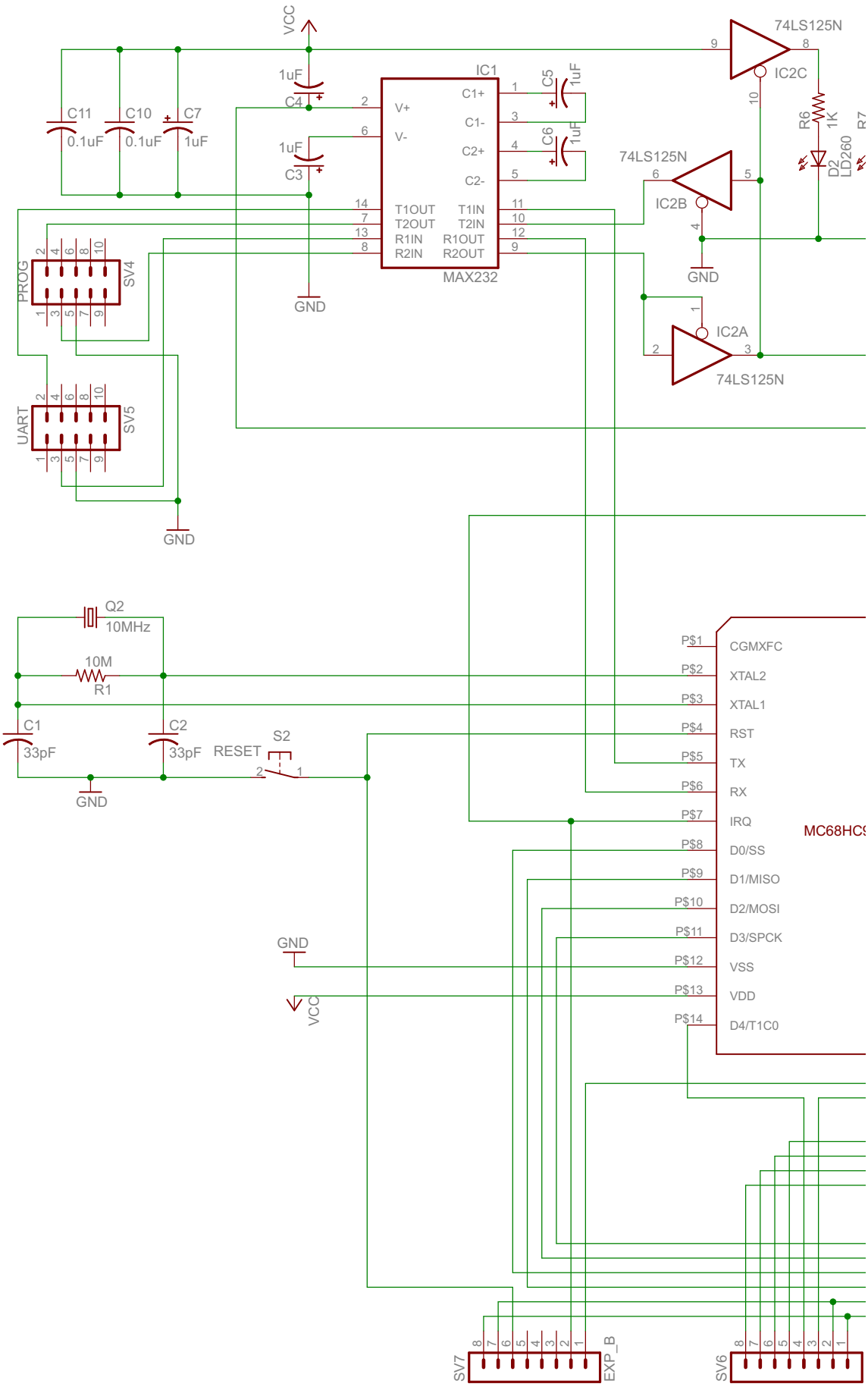
VCC
C11
0.1uF
C10
0.1uF
C7
1uF
C4
1uF
C3
1uF
IC1
V+
V-
C1+
C1-
C2+
C2-
T1OUT
T2OUT
R1IN
R2IN
T1IN
T2IN
R1OUT
R2OUT
MAX232
C5
1uF
C6
1uF
GND
74LS125N
IC2C
IC2B
IC2A
R6
1K
D2
LD260
PROG
SV4
UART
SV5
Q2
10MHz
10M
R1
C1
33pF
C2
33pF
RESET
S2
P$1
P$2
P$3
P$4
P$5
P$6
P$7
P$8
P$9
P$10
P$11
P$12
P$13
P$14
CGMXFC
XTAL2
XTAL1
RST
TX
RX
IRQ
D0/SS
D1/MISO
D2/MOSI
D3/SPCK
VSS
VDD
D4/T1C0
MC68HC
SV7
EXP_B
SV6

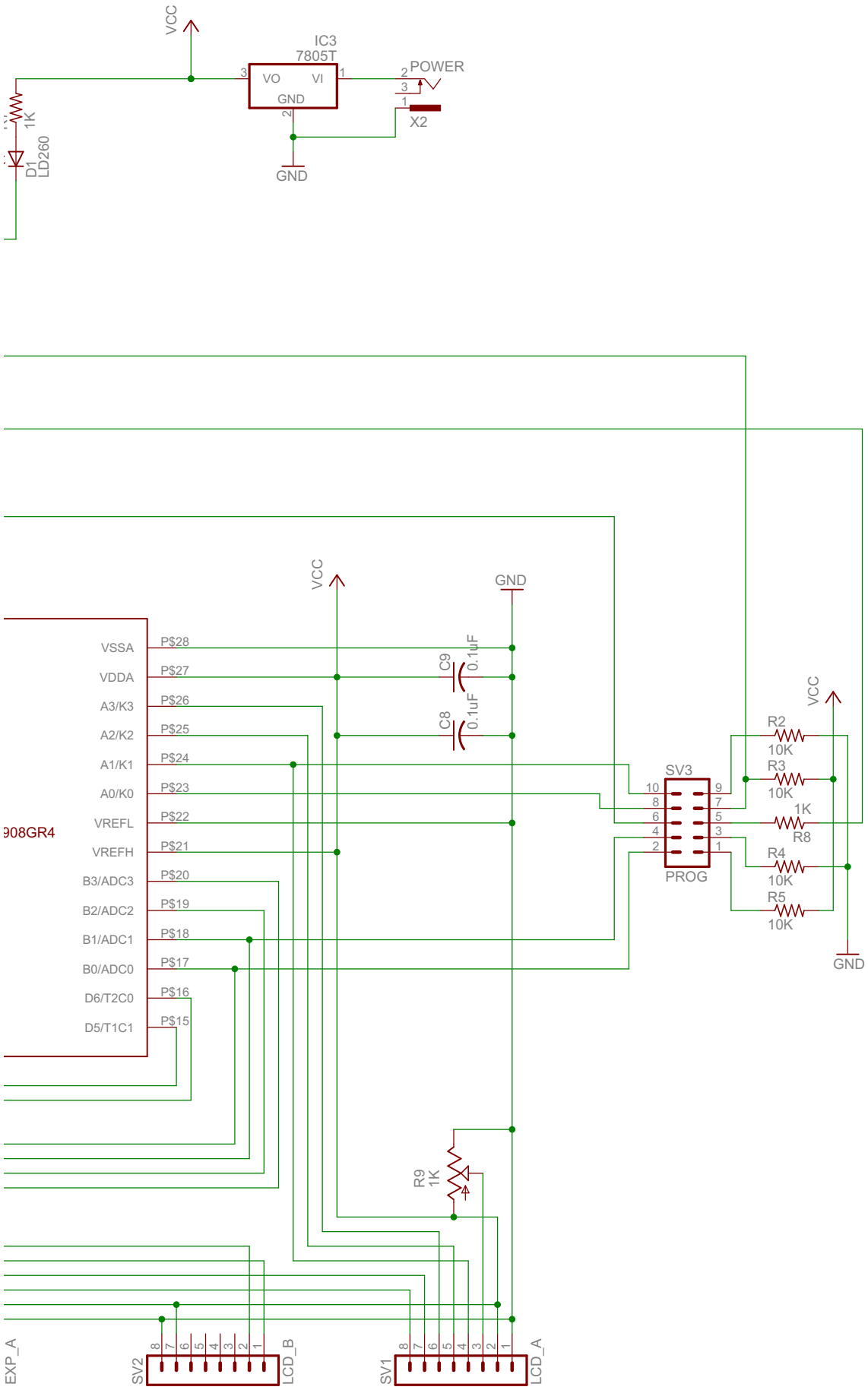
VCC
IC3
7805T
VO
VI
GND
POWER
X2
1K
D1
LD260
GND
VCC
GND
VSSA
VDDA
A3/K3
A2/K2
A1/K1
A0/K0
VREFL
VREFH
B3/ADC3
B2/ADC2
B1/ADC1
B0/ADC0
D6/T2C0
D5/T1C1
P$28
P$27
P$26
P$25
P$24
P$23
P$22
P$21
P$20
P$19
P$18
P$17
P$16
P$15
C9
0.1uF
C8
0.1uF
SV3
PROG
R2
10K
R3
10K
1K
R8
R4
10K
R5
10K
VCC
GND
R9
1K
EXP_A
SV2
LCD_B
SV1
LCD_A

)