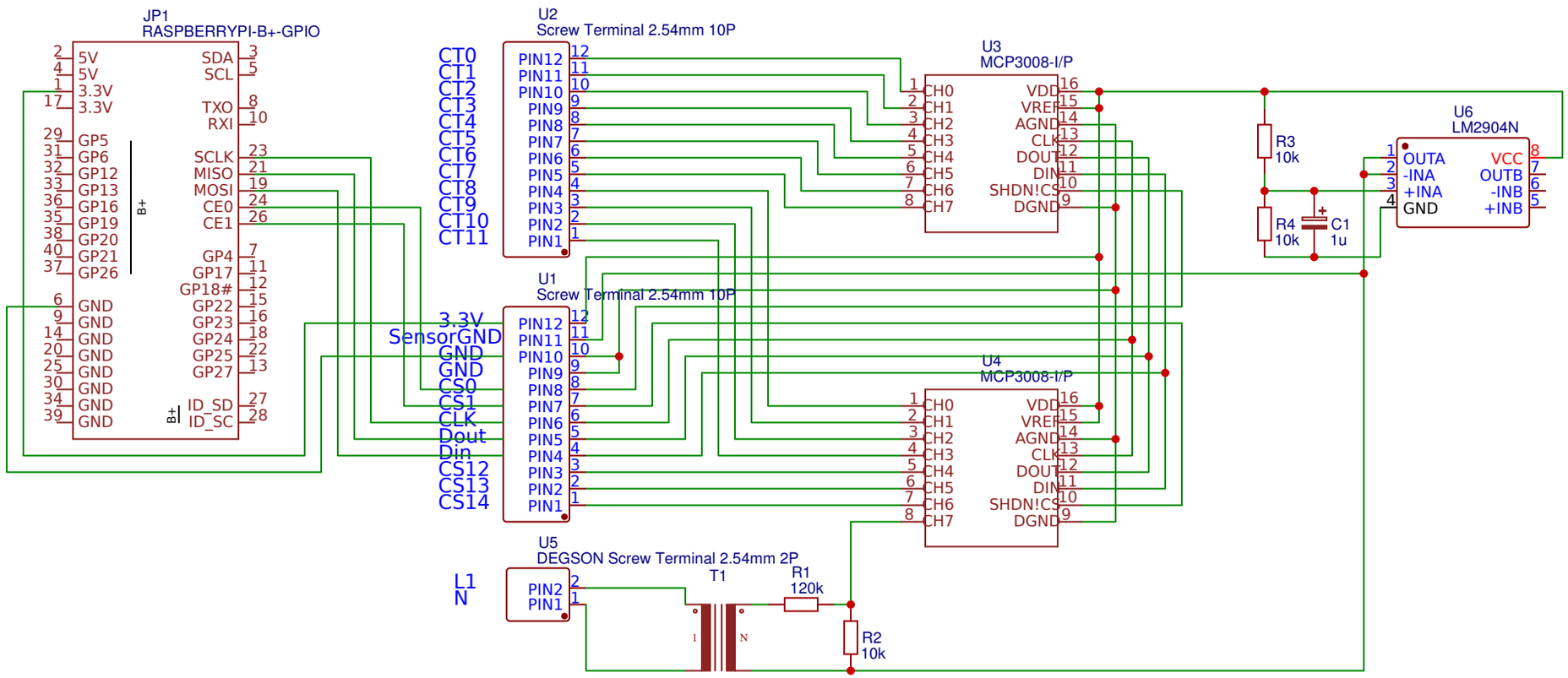

TITLE: EnergyMeter	REV: 1.0
Date: 2017-04-17	Sheet: 1/1
EasyEDA V4.4.4	Drawn By: privatosan