Circuit design Bodacious Crift-La

tinkercad.com/things/iAn1VIll9HI-bodacious-crift-lappi/editel?tenant=circuits

Bodacious Crift-Lappi

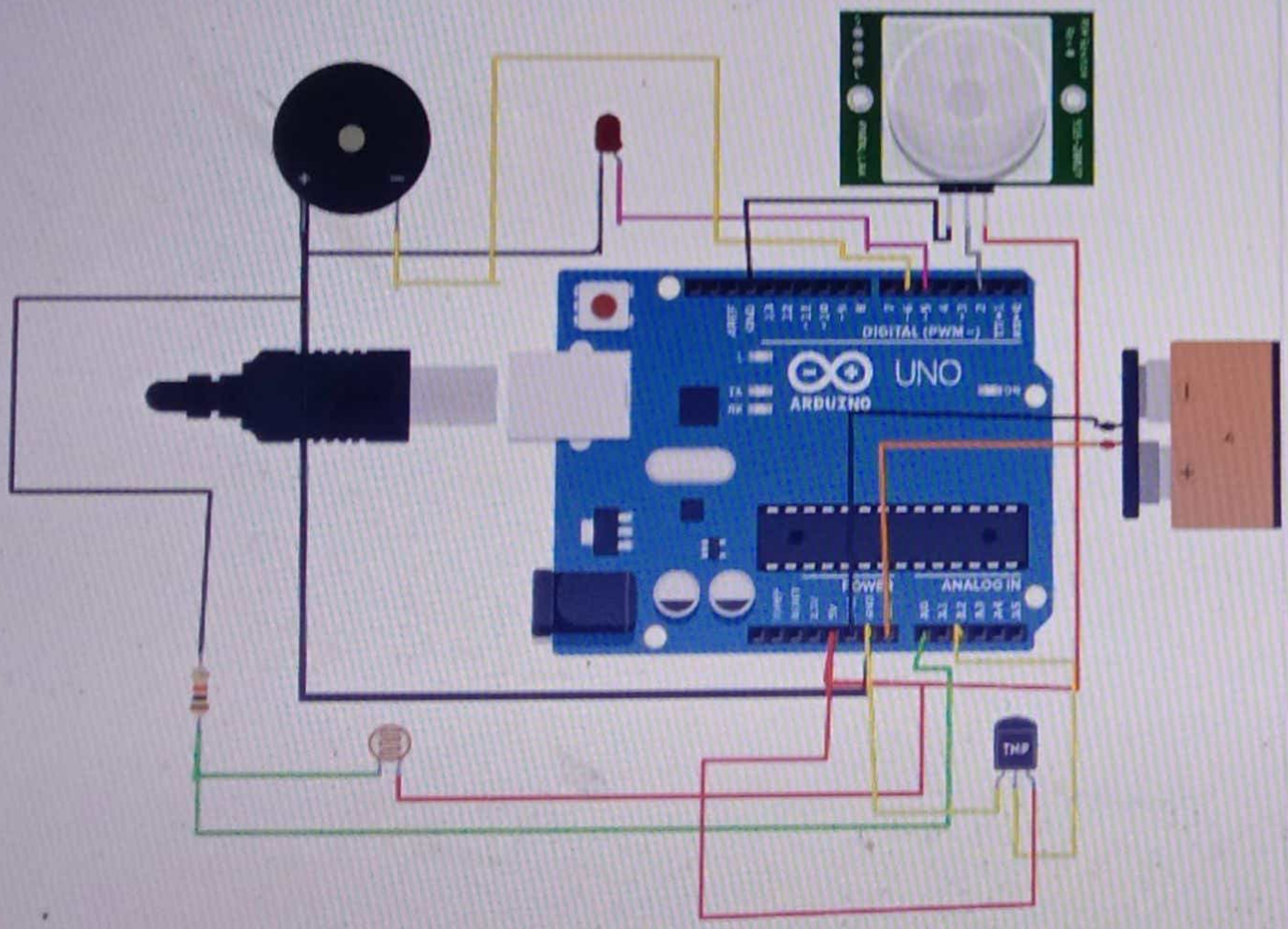

Shot on Y12

tinkercad.com/things/iAn1VIIl9HI-bodacious-crift-lappi/editel?tenant=circuits

Bodacious Crift-Lappi

All changes saved

Code

Send To

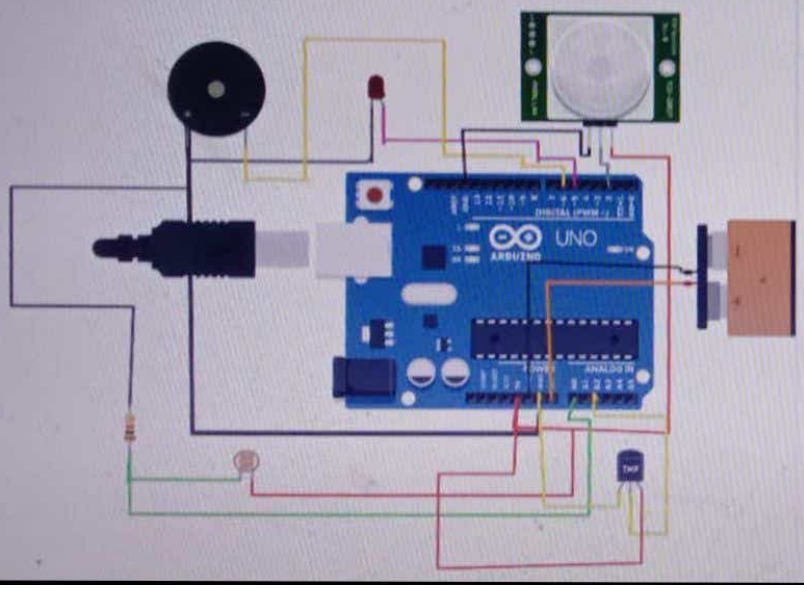

Text

1 (Arduino Uno R3)

```
Serial.begin(9600);
}

void loop(){
val = digitalRead(inputPin); // read input value
int value_ldr = analogRead(A0); // read LDR value

if((300>value_ldr) && ( val==HIGH) ){
if (val == HIGH) { // check if the input is HIGH
digitalWrite(ledPin, HIGH); // turn LED ON
digitalWrite(Buzzer, 1);
delay(5000);
if (pirState == LOW) {
// we have just turned on
Serial.println("Motion detected!");
// We only want to print on the output change, not state
pirState = HIGH;
}
} else {
digitalRead(ledPin, LOW); // turn LED OFF
digitalWrite(Buzzer, 0); // turn Buzzer OFF
if (pirState == HIGH){
// we have just turned of
Serial.println("Motion ended!");
// We only want to print on the output change, not state
pirState = LOW;
}
}
}
```

Serial Monitor