Understanding Field-Programmable Gate Arrays (FPGAs) from First Principles

Priyal Taneja

January 3, 2026

Abstract

This article provides a technical explanation of the internal architecture and design methodologies of modern Field-Programmable Gate Arrays (FPGAs). The focus is on analyzing how the device is constructed in silicon, how its major components interact at the transistor and signal levels, and how these elements combine to form a digital device that's universally reconfigurable. The document covers configurable logic blocks, programmable interconnect, memory resources, DSP slices, I/O interfaces, clocking architecture, and the HDL-to-hardware design flow.

Contents

1 Introduction & Prerequisites **3**

2 The Gap in the Hardware Spectrum **3**
2.1 The Evolution of Logic Chips . . . 3
2.2 Why FPGAs? The Need for Reconfigurable Hardware . . . 4

3 An Overview of an FPGA's Architecture **4**

4 Configurable Logic Blocks (CLB) **6**
4.1 Lookup Tables (LUTs) . . . 6
4.1.1 Architectural Development: The 6-Input LUT . . . 9
4.2 Flip-Flops and Registers . . . 9
4.3 Carry Chains . . . 10

5 Programmable Interconnect **10**
5.1 Routing Channels . . . 10
5.2 Switch Matrices . . . 11
5.3 Key Parameters . . . 11
5.3.1 Switch Hops . . . 13
5.3.2 Channel Width . . . 13
5.3.3 Segment Length . . . 13

6 Memory Resources **14**
6.1 Configuration RAM (CRAM) . . . 14
6.2 Distributed RAM . . . 14

6.3 Block RAM (BRAM) 15

7 DSP Slices / Hardened Arithmetic Blocks 15
7.1 Internal Structure of a DSP Slice 15
7.2 The Role of the Pre-Adder 16
7.3 Cascading and Wide Arithmetic 17

8 I/O, Transceivers, and High-Speed Interfaces 17
8.1 I/O Blocks and Electrical Standards 17
8.2 Differential Signaling and LVDS 18

9 Clocking Architecture 18
9.1 Global Clock Distribution and Skew 18
9.2 Clock Management Blocks 19

10 HDL-to-Hardware Flow 19
10.1 Hardware Description Languages 19
10.1.1 Concurrency in Verilog: Combinational Example 19
10.1.2 Concurrency in Verilog: Sequential Example 20
10.2 Synthesis 20
10.3 Placement and Routing 20
10.4 Static Timing Analysis 21
10.5 Bitstream Generation 21

1 Introduction & Prerequisites

This article provides a technical explanation of the internal architecture and design methodologies of modern **Field-Programmable Gate Arrays (FPGAs)**. The focus is on analyzing how the device is constructed in silicon, how its major components interact at the transistor and signal levels, and how these elements combine to form a digital device that's universally reconfigurable.

To navigate the architectural complexities detailed, it is assumed that the reader is familiar with digital logic design fundamentals, such as:

- **Logic Gates:** The functional behavior of AND, OR, NOT, NAND, NOR, and XOR gates
- **Truth Tables:** The tabular representation of Boolean logic functions
- **Boolean Algebra:** The mathematical manipulation of binary variables
- **Adder Circuits:** The mechanics of binary addition, including half-adders, full-adders, and ripple-carry propagation
- **Sequential Logic:** The concept of state retention using latches and flip-flops, and the critical role of clock signals in synchronous systems

No prior experience with Hardware Description Languages (HDL) such as VHDL or Verilog, nor familiarity with specific FPGA vendor toolchains, is required.

2 The Gap in the Hardware Spectrum

2.1 The Evolution of Logic Chips

A logic chip is defined as a semiconductor integrated circuit that performs fundamental operations, calculations and processing tasks in electronic systems. From personal smartphones to industrial automation and automotive systems, these chips play an imperative role in today's digital world.

The most familiar of these is the **Central Processing Unit (CPU)**. Mechanically, a CPU operates on a sequential execution model. In this model, instructions are fetched from memory, decoded, and executed one after another. At the hardware level, a program counter provides the address of the next instruction; the CPU retrieves it, interprets the operation, and activates the appropriate circuitry to execute the command before advancing to the next step.

While this architecture excels at tasks requiring complex decision-making, data-driven branching, and frequent interaction with memory, the demands of emerging workloads in the 1990s exposed a significant limitation: the CPU's constrained capacity for executing massive numbers of computations concurrently. The inherently serial nature of the fetch-decode-execute cycle was unsuited for tasks such as 3D graphics rendering, which required performing identical mathematical operations across thousands of independent pixels simultaneously.

This gap led to the emergence of the **Graphics Processing Unit (GPU)**. Unlike a CPU's serial approach, a GPU arranges its hardware into arrays of basic arithmetic units that operate in unison. By giving each unit a different piece of data to work on while issuing the same instruction to all of them, the GPU can carry out many identical calculations at once.

Although this structure delivers extensive throughput, it comes with significant limitations. Groups of GPU threads must advance together under a shared instruction, so any divergence in their behav-

ior forces the hardware to serialize parts of the computation and reduces efficiency. Furthermore, the internal circuits are optimized specifically for arithmetic-heavy, data-parallel tasks rather than general-purpose logic. As a result, GPUs excel at uniform numerical workloads but are far less flexible when the computation's execution path varies according to the data being handled.

Another important class of logic chips is the **Application-Specific Integrated Circuit (ASIC)**. Unlike CPUs and GPUs, which rely on instruction-driven execution, an ASIC implements a fixed hardware design directly in silicon. This means every gate and control path is engineered for a defined purpose.

While this allows the chip to achieve far higher performance, a major drawback is that an ASIC cannot be reprogrammed after fabrication; the logic is permanently fixed. Any change to the algorithm, protocol, or hardware behavior requires a full redesign and an entirely new manufacturing run, which can cost millions of dollars and months of development time. This rigidity makes ASICs impractical for everchanging environments or applications that require post-deployment updates.

2.2 Why FPGAs? The Need for Reconfigurable Hardware

By the late 20th century, the hardware landscape had polarized into two categories: flexible, instruction-based processors (CPUs/GPUs) and high-performance, fixed-function hardware (ASICs). A critical void existed for a platform that could offer the performance characteristics of custom hardware while retaining the post-deployment adaptability of software.

Varying industries, like telecommunications and aerospace to name a few, demanded a change. They required hardware capable of processing data at wire speed, yet they also needed the ability to update encryption algorithms, modulation schemes, and communication protocols long after the hardware had been deployed. They could not commit to fixed silicon due to the risk of obsolescence, but they could not afford the inefficiency of serialized software.

This multifaceted demand motivated the novel creation of **Field-Programmable Gate Arrays (FPGAs)**. Instead of running a stream of instructions through a fixed microarchitecture, the user provides a configuration bitstream that rewires the hardware itself. The FPGA is essentially a collection of uncommitted logic resources, including gates, memory blocks, and wiring switches. When programmed, the device physically transforms into a specific digital circuit. The functionality is not expressed as a sequence of commands but as the spatial structure of the hardware. Updating an FPGA means redefining the logic equations, the data paths, and the control behavior implemented active within the chip. So, the device assumes a new functional behavior without the need for new manufacturing.

3 An Overview of an FPGA's Architecture

Modern FPGAs can be visualized as a two-dimensional matrix of small logic units surrounded by a programmable wiring network. Instead of instruction-driven execution, like those found in CPUs and GPUs, the FPGA contains no predefined instructions. It offers a canvas of logic elements, routing switches, memory structures, and hardwired computational blocks that can be interconnected to form almost any digital circuit.

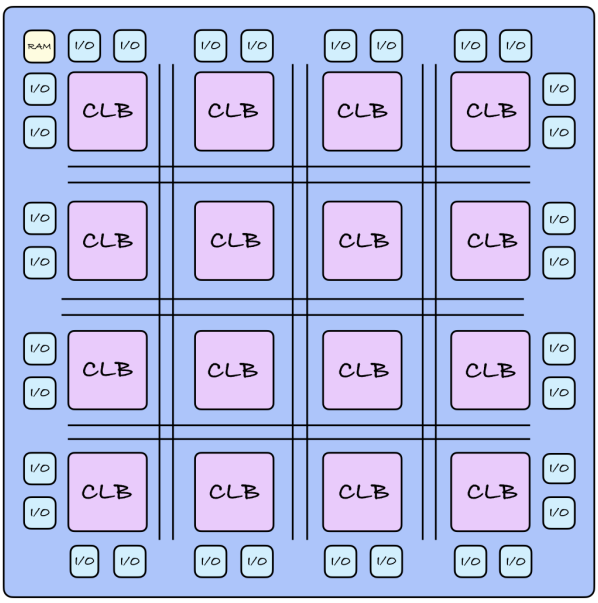

Figure 1: FPGA architectural overview showing CLBs, interconnect, I/O blocks, and specialized resources

When a configuration bitstream is loaded, it does not instruct the FPGA how to execute operations serially but rather redefines the structure of the hardware itself. The chip's internal switches are set so that signals flow through logic functions, memory elements, and routing paths. In effect, the FPGA transforms into a custom, application-specific integrated circuit, without requiring new silicon.

It's important to note that the specific implementations differ among vendors and models. However, modern FPGAs share the same top-level structure composed of four major elements:

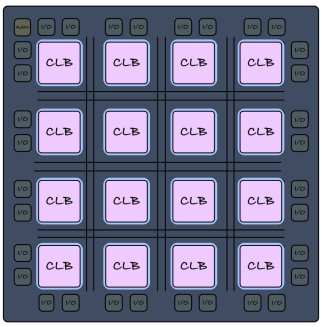

Figure 2: Configurable Logic Block (CLB)

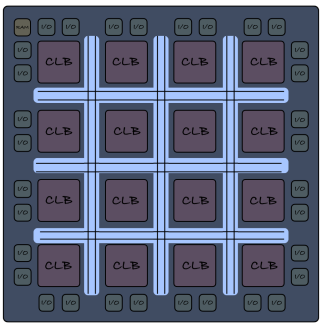

Figure 3: Programmable Interconnect

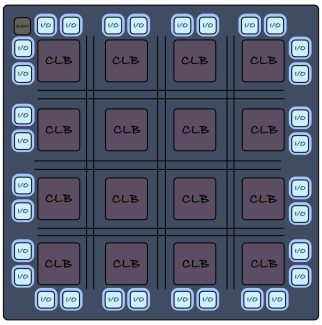

Figure 4: Input/Output Blocks

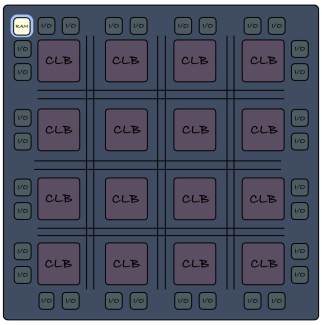

Figure 5: Specialized Blocks

1. **Configurable Logic Block (CLB):** The CLBs are the FPGA's basic logic units, which you configure to carry out the digital operations and functionality your circuit requires.
2. **Programmable Interconnect:** The programmable interconnect is the reconfigurable wiring fabric that links logic, memory, and I/O resources according to the user's design.
3. **Input/Output Blocks:** The I/O blocks form the interface between the FPGA's internal circuitry and the outside world, enabling communication with external components and systems.
4. **Specialized Blocks:** Specialized blocks are fixed-function hardware elements integrated into the chip to support operations that benefit from optimized, non-programmable circuitry.

Together, these elements form the foundation of contemporary FPGAs. The sections ahead detail how each component functions and illustrate how they combine to create hardware tailored precisely to the demands of any design.

4 Configurable Logic Blocks (CLB)

The **Configurable Logic Block (CLB)**, variously termed **Logic Array Block (LAB)** or **Logic Element (LE)** depending on the vendor, is the fundamental building block that gives an FPGA its ability to form arbitrary digital circuits.

At a high level, a CLB is a cluster of smaller, identical sub-units often called **Slices** or **Adaptive Logic Modules (ALMs)**.

An individual ALM consists of three essential resources that are the backbone of its capabilities:

1. Lookup Tables (LUTs) to implement combinational logic
2. Flip-Flops (FFs) or Registers to implement sequential logic
3. Carry-Chain Circuitry to implement arithmetic operations efficiently

4.1 Lookup Tables (LUTs)

The **Lookup Table (LUT)** is the primary combinational logic primitive in an FPGA. Despite the name Field-Programmable **Gate** Array, modern FPGAs do not contain physical AND, OR, or NAND gates in the user-programmable fabric. Instead, logic is implemented using memory.

Physically, a LUT is a small bank of SRAM cells coupled with a multiplexer tree. To implement a logic function, such as $Y = (A \wedge B) \vee C$, the synthesis software first calculates the truth table for

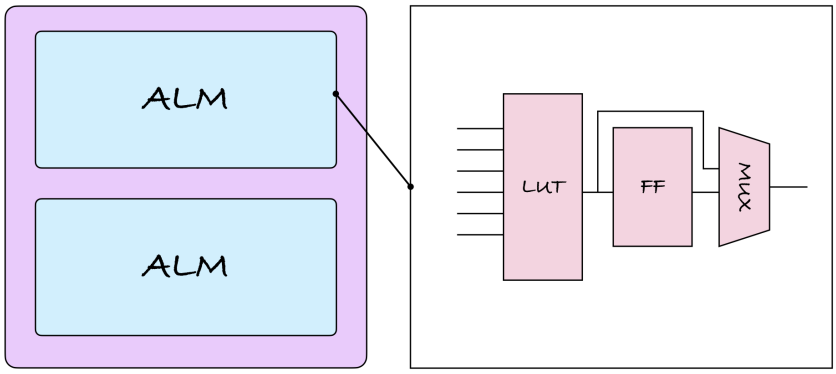

Figure 6: Adaptive Logic Module (ALM) internal structure

that function. During device configuration, the output column of this truth table is loaded into the LUT's SRAM cells. During operation, the input signals (A, B, C) act as the address lines to the respective SRAM. The multiplexer uses this address to select the appropriate bit from the memory and drives it to the output.

$$F = a \oplus b \oplus c$$

a	b	c	F
0	0	0	0
0	0	1	1
0	1	0	1
0	1	1	0
1	0	0	1
1	0	1	0
1	1	0	0
1	1	1	1

Figure 7: LUT operation: inputs serve as address lines to select the output from pre-programmed SRAM

Because a LUT reads a pre-calculated result from memory rather than evaluating a chain of logic gates, the propagation delay through a LUT is independent of the logical complexity of the function. A simple 2-input AND gate and a complex 6-input Boolean expression take the exact same amount of time to execute, provided they fit within a single LUT. The number of LUT inputs is therefore a key architectural parameter, as it dictates the stages of multiplexers the signal must traverse internally.

$$F = a \oplus b \oplus c$$

IN1	IN2	IN3	SRAM
0	0	0	0
0	0	1	1
0	1	0	1
0	1	1	0
1	0	0	1
1	0	1	0
1	1	0	0
1	1	1	1

Figure 8: Example of a 3-input LUT implementing a specific Boolean function

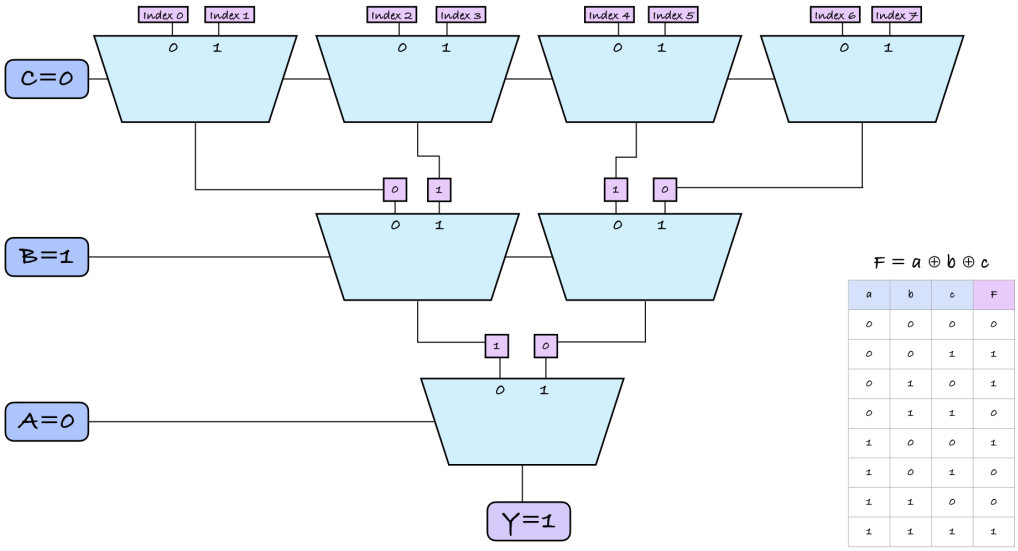

Figure 9: LUT implementation detail

4.1.1 Architectural Development: The 6-Input LUT

Early FPGAs utilized 4-input LUTs. However, modern architectures (such as the Xilinx 7-Series, UltraScale, and Intel Stratix 10) have standardized on 6-input LUTs. This design choice represents a complex trade-off between silicon area and system performance.

- **Area Penalty:** A k-input LUT requires 2^k configuration bits. Moving from 4 inputs ($2^4 = 16$ bits) to 6 inputs ($2^6 = 64$ bits) increases the SRAM area by $4\times$ for only a $1.5\times$ increase in input width.
- **Performance Increase:** The dominant source of delay in FPGAs is the programmable interconnect (routing), not the logic itself. By moving to larger LUTs, designs require fewer logic levels (LUTs in series) to implement a function. This reduces the number of interconnect hops a signal must travel through, significantly increasing the maximum frequency of the circuit.

Modern LUTs are also fracturable. A single 6-input LUT can typically be split into two 5-input LUTs (sharing some inputs) or two independent small LUTs. This prevents the waste of silicon resources when implementing simple logic functions, ideally balancing the need for deep logic with the efficiency of granular logic.

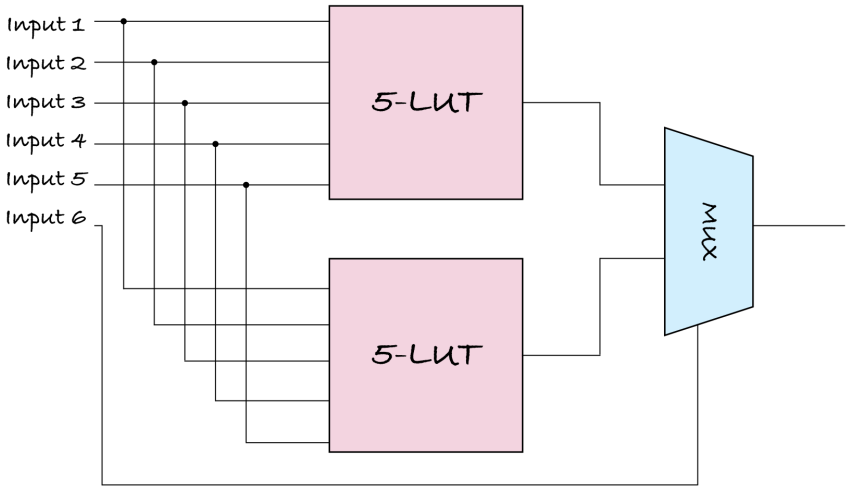

Figure 10: 6-input LUT configured as two independent 5-input LUTs with shared inputs

4.2 Flip-Flops and Registers

LUTs give an FPGA the ability to implement arbitrary combinational logic, but by itself it cannot hold information. Digital systems require a way to remember intermediate results, synchronize operations, and ensure signals remain stable long enough for downstream logic to evaluate them. Hence, each logic cell includes one or more dedicated flip-flops (FF) that serve as a fundamental storage resource.

At a conceptual level, a flip-flop is a one-bit memory element that updates its stored value only when a clock signal transitions. The FPGA uses D-type edge-triggered flip-flops, where the data input is sampled just before the active clock transition and then transferred to the output at the moment

of the edge. Between clock events, the output remains fixed, even if upstream signals continue to fluctuate.

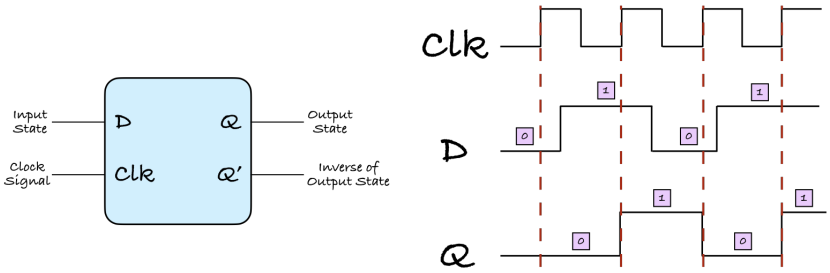

Figure 11: Clock cycle timing diagram showing setup and hold times

This controlled update behavior creates the foundation of synchronous logic. Instead of allowing signals to ripple through the design without coordination and creating a system that is susceptible to glitches, the circuit advances through a sequence of well-defined states on each clock cycle.

Recall that in each logic cell, the flip-flop sits directly beside the LUT to minimize routing delay between logic and storage. A 2:1 multiplexer then selects whether the LUT's output is sent out immediately or routed through the flip-flop first, determining whether the logic operates combinationally or as a registered pipeline stage.

4.3 Carry Chains

Binary addition and subtraction rely on the propagation of a *carry* bit. In a standard ripple-carry adder, the carry-out from bit N must propagate to the input of bit $N + 1$. If implemented using standard LUTs and general routing, a 32-bit adder would require the signal to traverse 32 LUTs and 32 interconnect segments, resulting in prohibitive delays.

To solve this, FPGAs incorporate dedicated carry logic, a hardwired silicon path that runs vertically between adjacent Slices. This bypasses the general routing fabric entirely. When an adder is synthesized, the LUTs compute the sum bits, while the carry propagation is offloaded to this dedicated high-speed avenue. The carry signal can traverse a Slice in mere picoseconds, allowing FPGAs to implement wide counters and adders (e.g., 64-bit or 128-bit) that operate at hundreds of Megahertz.

5 Programmable Interconnect

Once the CLBs have been defined to perform specific operations, the next challenge in FPGA design is establishing the pathways that enable communication between these logic units. FPGAs don't simply contain isolated logic blocks; they require interconnections to form functional circuits that facilitate data transfer between logic blocks, memory units, and other specialized resources. This is achieved through a network of pre-fabricated wires and programmable switches.

5.1 Routing Channels

As previously established, the CLBs are arranged in a grid-like structure, with channels positioned in the rows and columns adjoining them. These channels are made up of fixed wire segments that

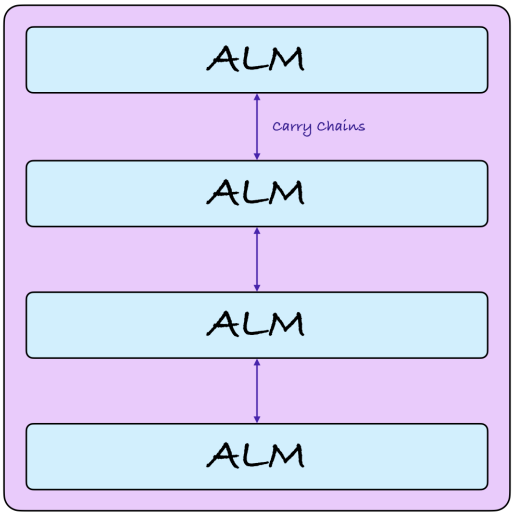

Figure 12: ALMs arranged vertically with dedicated carry-chain circuitry bypassing general routing

provide predefined paths for signal transmission across the FPGA. Although the wires themselves remain static, their strategic placement allows for significant routing flexibility.

To connect one logic block to another, a signal must first exit the logic block pin, then enter the adjacent routing channel and traverse through the network to reach its destination. By leveraging the right combination of horizontal and vertical channels, each logic block is guaranteed a direct path to any other component on the board. When possible, data prioritizes the travel through local wires that connect neighbouring CLBs, to minimize delay. This grid-based layout provides the FPGA with both the reach and adaptability to implement circuits with varying complexity.

5.2 Switch Matrices

The mechanism that makes these fixed wires *programmable* is the **Switch Matrix** located at the intersection of every horizontal and vertical channel. A Switch Matrix is a collection of pass transistors whose states are controlled by SRAM cells.

When a routing path is defined, the configuration bitstream turns on specific transistors within the matrix, creating a conductive 90-degree or 180-degree path for signals to travel through. By default, the transistors remain in an off state, meaning the connection between the vertical and horizontal wires is open and electrically isolated.

5.3 Key Parameters

The routing network's behaviour is governed by several architectural parameters that determine how many paths exist, how far signals can travel, and how much delay each connection incurs. Understanding these parameters and design trade-offs is essential for appreciating how FPGAs achieve their reconfigurability.

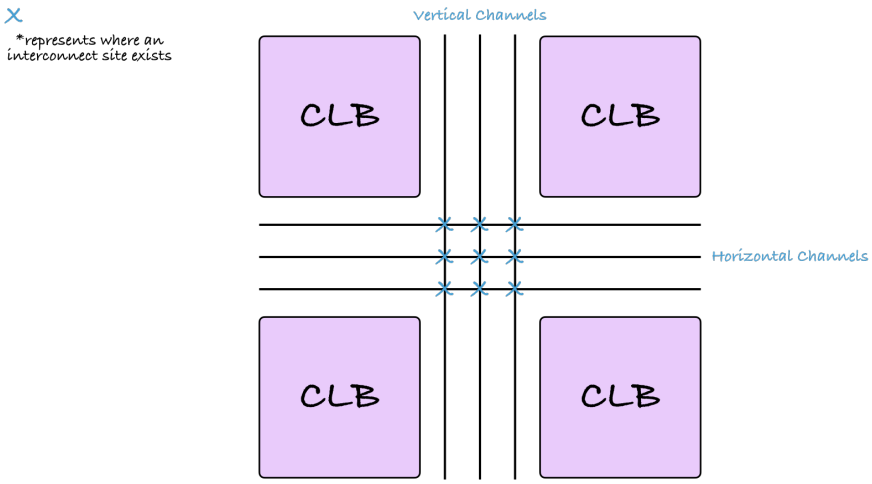

Figure 13: Routing channels between CLBs showing horizontal and vertical wire segments

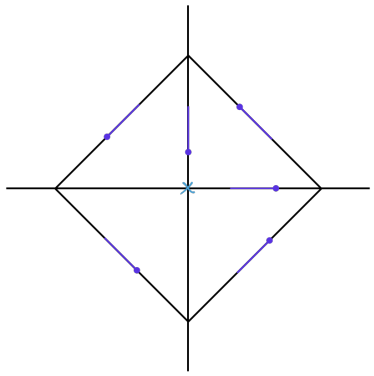

Figure 14: Switch matrix at routing channel intersections with programmable connections

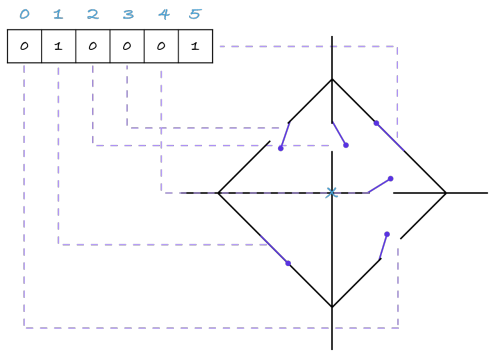

Figure 15: SRAM cell controlling the gate of a pass transistor in the switch matrix

5.3.1 Switch Hops

Switch hops are defined as the number of switch matrices a signal travels through. When traversing through a matrix, it experiences a delay due to the pass transistor and the intrinsic wiring capacitance. Designers and tools therefore aim to minimize the number of switch matrices a signal must pass through.

For reference, a direct neighbour-to-neighbour connection is typically 1 hop whereas a long-distance route may entail many hops, depending on the desired result.

Reducing hop count is a foundational optimization objective in FPGA routing, as it directly impacts processing speed and power.

5.3.2 Channel Width

Channel width (denoted by W) defines the number of parallel routing tracks available in each channel. It is a critical parameter that dictates the routing capacity of the FPGA fabric.

A greater W value directly translates to several benefits:

- **More alternative paths:** A higher track count gives the routing algorithms more options for connecting logic block outputs to inputs, making it easier to find efficient, low-latency routes.
- **Reduced routing congestion:** As circuits become larger and more complex, they require more connections. A wider channel reduces the likelihood of signals competing for the same limited wires, preventing bottlenecks.
- **Lower likelihood of failed routing:** For complex designs, a sufficiently wide channel is necessary to ensure that all required connections can be successfully mapped onto the physical hardware.

However, increasing W comes with a significant trade-off in terms of silicon area and power consumption. Every additional wire requires extra metal, more switch connections within the switch matrix, and larger transistor structures to manage the increased complexity.

FPGA vendors must therefore tune W to the minimum value that guarantees high routability for the vast majority of practical designs without causing excessive silicon cost. The chosen W value represents a balance point between performance/flexibility and manufacturing cost/power efficiency.

5.3.3 Segment Length

An FPGA's channel length (denoted by L) refers to the distance wire segments span in the programmable routing fabric. L is measured by the number of CLBs that span a single continuous wire.

Short segments ($L = 1$, connecting only adjacent CLBs) offer maximum routing flexibility because a signal can change direction at every CLB boundary. Though, a long-distance connection using only short segments utilizes a high number of switch hops, resulting in a significant signal delay.

Conversely, longer segments ($L > 1$, spanning multiple CLBs) provide faster long-distance connections by reducing the number of switch matrices a signal must traverse. Yet, these long wires are less flexible for local connections, as they must be used in their entirety, potentially overshooting the target and leading to unnecessary resource consumption.

Modern FPGAs use a hierarchical routing architecture that combines segments of various lengths to balance these trade-offs. This multi-segment approach allows the synthesis tools to select the optimal wire length for each connection; the FPGA will intentionally use short wires for local, granular connections and longer segments for signals stretching across greater distances.

Overall, FPGA vendors must account for the key parameters and achieve the right balance among routing flexibility, timing predictability, and silicon overhead. It's a core design challenge that continues to be explored, to ensure the device offers optimal flexibility and performance for the vast range of circuits FPGAs are designed to implement.

6 Memory Resources

While flip-flops provide fast, distributed state retention, they are area-inefficient for bulk data storage. A single flip-flop consumes a relatively large area compared to a dedicated memory unit. To address this, FPGAs employ diverse on-chip memory resources such as block RAM (BRAM), distributed RAM implemented using lookup tables (LUTs), and specialized shift-register memory structures, enabling efficient storage of large volumes of data with reduced area and power consumption.

6.1 Configuration RAM (CRAM)

The most fundamental memory in an FPGA is one the user never interacts with directly: the **Configuration RAM (CRAM)**. These are the millions of volatile SRAM cells that store the user's design. The bitstream file loaded at startup is essentially a binary image of this memory.

- **Function:** CRAM bits drive the select lines of multiplexers, the gates of routing pass transistors, and the truth tables of LUTs.
- **Volatility:** Since CRAM is SRAM-based, it loses its data when power is removed. This is why most FPGAs must be reconfigured from an external flash memory or processor at every power cycle.

6.2 Distributed RAM

The first layer of user-accessible memory is Distributed RAM. As noted in Section 4.1, LUTs are built from a collection of SRAM cells. In standard logic mode, this SRAM is read-only. However, modern FPGA architectures (such as Xilinx's SLICEM) include additional write circuitry that allows the user logic to write to the LUT's SRAM cells during operation.

- **Flexibility:** This allows small memories to be instantiated anywhere in the logic fabric. A single LUT can become a 32×1 bit RAM or a 16×2 bit RAM.
- **Use Cases:** Distributed RAM is ideal for small scratchpad memories, register files, and small FIFOs where the overhead of a large memory block is unjustified.
- **Shift Registers (SRL):** A unique capability of Distributed RAM is the **Shift Register Logic (SRL)** mode. The SRAM cells in the LUT can be chained together to form a variable-length shift register (e.g., up to 32 bits deep) without using a single flip-flop. This is highly efficient for implementing digital delay lines and pipelining in DSP applications.

6.3 Block RAM (BRAM)

For bulk storage, ranging in kilobytes to megabytes, FPGAs embed columns of dedicated **Block RAM (BRAM)**. These are hard-macro SRAM arrays (typically 18Kb or 36Kb in size) that exist separately from other core components.

- **True Dual-Port:** This allows simultaneous reads and writes from different clock domains, which makes BRAMs ideal for implementing FIFOs that safely transfer data between circuits running on different clocks.
- **Configurability:** A BRAM is not a fixed shape. A 36Kb block can be configured as a deep, narrow memory (32K $\times$ 1), a wide, shallow memory (1K $\times$ 36), or various aspect ratios in between. This elasticity allows the memory to match the data path width perfectly.
- **Performance:** Because BRAMs are hard-wired custom blocks, they are significantly faster and denser than Distributed RAM. They often include built-in features like **Error Correction Code (ECC)** logic and output registers to maximize timing performance.

Table 1: Comparison of FPGA Memory Resources

Feature	**Flip-Flops**	**Distributed RAM**	**Block RAM**
Primary Use	State machines, pipelines	Small LUTs, coefficients, delay lines	Data buffers, large FIFOs, caches
Bit Density	Very Low	Low	High
Speed	Ultra-High	High	High (with latency)
Ports	Single (D input, Q output)	Single or Dual	True Dual Port (A & B)
Resource Cost	Uses Slice Register	Uses Logic LUTs	Uses Dedicated BRAM Column
Ideal Size	1 bit – 100 bits	100 bits – 10 Kbits	10 Kbits – Megabits

7 DSP Slices / Hardened Arithmetic Blocks

Although Lookup Tables can be configured to perform arithmetic operations, implementing complex mathematical functions purely in general logic is both area-inefficient and slow. For example, an 18$\times$18-bit multiplier synthesized from LUTs would consume hundreds of logic elements and suffer from long carry-propagation delays.

To approach this inefficiency, modern FPGAs integrate DSP slices, which are fixed-function units optimized for high-throughput numerical computation. These blocks form the computational backbone of applications such as digital signal processing, video processing, wireless communication, and machine learning acceleration.

7.1 Internal Structure of a DSP Slice

A **DSP slice** is best understood as a pre-built arithmetic pipeline whose main job is to compute a **multiply-accumulate (MAC)**. The canonical operation is:

$$P = A \times B + C$$

This appears constantly in digital signal processing because many algorithms reduce to multiplying some input by a coefficient, then adding it into a running sum. Instead of building this out of LUTs and carry chains, the FPGA provides a hardened block that already contains the required hardware to improve calculation speed.

Internally, the slice contains three main arithmetic stages arranged in a fixed datapath. Many DSP slices include an optional pre-adder. This unit can add or subtract two input values before they reach the multiplier, allowing the slice to compute expressions of the form $(A_1 \pm A_2) \times B$. Following is the dedicated multiplier, commonly sized around 25×18 or 27×18 bits depending on the vendor family. The multiplier output feeds into a wide post-adder / accumulator (often 48 bits) which can add an incoming value C and store the result P.

Because these stages are separated by optional pipeline registers, the DSP slice can be clocked at very high frequencies. The trade-off is that the result may appear after a fixed number of cycles of latency, but once the pipeline is full the slice can produce one result per cycle.

Many modern architectures also include auxiliary logic such as a pattern detector, which can compare the output against a programmed value. This feature is typically used for tasks like overflow detection, rounding behavior, or saturation logic, rather than being a core part of the MAC datapath.

7.2 The Role of the Pre-Adder

At first glance, a pre-adder seems redundant because the DSP slice already contains an adder after the multiplier. The key difference is where the addition occurs. The post-adder combines results after multiplication. The pre-adder combines values before multiplication, which can reduce the number of multiplications required in certain algorithms.

This particularly matters because multipliers are the most expensive arithmetic operation in terms of power and area. If an algorithm can be rearranged to use fewer multiplications, it becomes significantly more efficient.

A common example is the **Finite Impulse Response (FIR)** filter, where symmetric coefficients often occur:

$$h_0 = h_n, \quad h_1 = h_{n-1}, \quad \ldots$$

In a symmetric FIR, two different input samples are multiplied by the same coefficient. Because multiplication distributes over addition, those two multiplications can be rewritten as one multiplication if the inputs are added first:

$$h_0 \cdot x[n] + h_0 \cdot x[n-k] = h_0 \cdot (x[n] + x[n-k])$$

This is exactly what the pre-adder enables. The DSP slice can add $x[n]$ and $x[n-k]$ in the pre-adder and then multiply the sum by the shared coefficient h_0. In effect, the design computes the contribution of two filter taps using one multiplier, which increases throughput or reduces DSP usage while keeping the same filter behavior.

In practical terms, the pre-adder exists because it matches the structure of real DSP workloads: many systems repeatedly perform the sum of two samples, multiplied by a coefficient, and accumulate into an output. Implementing that pattern directly inside the DSP slice is more efficient than forcing the synthesis tools to build it from general logic.

7.3 Cascading and Wide Arithmetic

DSP slices are not intended to operate independently. They are arranged in vertical columns and connected by dedicated cascade paths that allow data to pass directly from one slice to the next without traversing the general routing fabric, in a similar manner to carry-chain circuitry. This architectural choice enables the construction of extremely wide arithmetic structures.

By chaining multiple slices together, designers can build accumulators exceeding 96 or 128 bits while maintaining high clock frequencies. Because the intermediate signals remain on dedicated inter-slice wiring, these wide datapaths avoid the routing delays that would otherwise limit performance.

Some DSP architectures also support SIMD modes, in which the wide arithmetic units are subdivided into multiple smaller lanes. In this configuration, a single DSP slice can operate on several lower-precision data streams simultaneously, making it particularly effective for applications that must be processed in parallel.

8 I/O, Transceivers, and High-Speed Interfaces

The **Input/Output (I/O)** subsystem defines how an FPGA communicates with the external world. While the internal logic of an FPGA may operate at hundreds of megahertz, the adequacy of the device also depends on how efficiently data can enter and leave the chip. As interface speeds have increased from simple GPIO-style signaling to multi-gigabit serial links, the I/O design has evolved into one of the most complex mixed-signal components.

Rather than treating I/O as simple digital buffers, contemporary FPGA designs integrate configurable electrical drivers, on-chip impedance control, differential signaling support, and hardened high-speed transceivers. This allows the same device to interface with low-speed control signals, high-speed memory buses, and multi-gigabit communication protocols all together.

8.1 I/O Blocks and Electrical Standards

Each physical pin on an FPGA is controlled by an **Input/Output Block (IOB)**. The IOB forms the boundary between the FPGA's internal logic fabric and the external printed circuit board. Unlike fixed-function chips, FPGA IOBs are highly configurable, allowing the same pin to support a wide range of electrical signaling standards through configuration alone.

These standards define voltage levels, termination requirements, and signaling behavior. For example, an IOB may be configured to operate as 3.3 V LVTTL for simple control signals, 1.2 V POD for DDR memory interfaces, or LVDS for high-speed differential communication. This flexibility allows a single FPGA to replace many discrete interface components.

At high signaling speeds, PCB traces behave as transmission lines rather than ideal wires. If the output impedance of the FPGA driver does not match the characteristic impedance of the trace, signal reflections occur. These reflections can cause ringing, overshoot, and data corruption, particularly as edge rates increase.

To handle this, FPGAs implement **Digitally Controlled Impedance (DCI)**. Instead of relying on external termination resistors, the FPGA dynamically adjusts the strength of its output transistors to match a reference impedance. This calibration compensates for variations in manufacturing process, supply voltage, and temperature, maintaining signal integrity while reducing board-level complexity.

8.2 Differential Signaling and LVDS

As data rates increase, single-ended signaling becomes increasingly susceptible to noise and electromagnetic interference. To overcome this limitation, FPGAs make extensive use of differential signaling, most commonly in the form of **Low-Voltage Differential Signaling (LVDS)**.

In differential signaling, information is conveyed as the voltage difference between two complementary wires rather than as an absolute voltage relative to ground. When the transmitted logic value changes, one wire increases in voltage while the other decreases. The receiver measures only the difference between the two.

This approach offers two major advantages. First, external noise tends to couple equally onto both wires, appearing as common-mode noise that is rejected by the receiver. Second, as the voltage swing is small, power consumption is reduced and edge transitions can occur more quickly. These properties allow LVDS links to operate reliably at data rates exceeding 1 Gbps per pin pair while maintaining signal integrity.

9 Clocking Architecture

In synchronous digital systems, the clock signal defines when data is sampled and propagated. Distributing this signal across a large FPGA while maintaining precise timing alignment is one of the most challenging aspects of chip design.

9.1 Global Clock Distribution and Skew

Clock skew refers to the difference in arrival time of a clock edge at different flip-flops. Excessive skew can lead to data being sampled incorrectly along with hold-time violations and setup failure.

To minimize this effect, FPGAs use a dedicated global clock distribution network that is entirely separate from the general routing system. This network is carefully engineered to provide low resistance, low capacitance paths with highly predictable delays. A common topology is the H-tree, in which the clock signal enters near the center of the chip and branches outward symmetrically. By matching the physical length of each branch, the propagation delay from the source to every endpoint is equalized as much as possible.

Modern FPGAs further divide the device into rectangular clock regions, each with local clocking resources. This structure allows different regions of the chip to operate on different clocks, enabling multiple independent clock domains while maintaining low skew within each region.

It is important to distinguish skew from jitter. Skew is a spatial effect, describing differences in arrival time across the chip, whereas jitter is a temporal effect, describing variation in the clock period from cycle to cycle. Excessive buffering can reduce skew but may introduce jitter, so the clock network must be designed to balance both effects.

9.2 Clock Management Blocks

In addition to distributing clocks, FPGAs must also generate and manipulate them for specific use-cases. For this purpose, devices include dedicated Clock Management Blocks, typically containing **Phase-Locked Loops (PLLs)** and **Mixed-Mode Clock Managers (MMCMs)**.

These blocks allow designers to derive multiple internal clocks from a single external reference. For example, a 100 MHz input clock may be multiplied and divided to generate a 400 MHz clock for logic, a 200 MHz clock for memory interfaces, and a phase-shifted clock for data capture. This capability is essential for systems that combine logic operating at different speeds.

Clock management blocks also support precise phase shifting, which is critical when interfacing with high-speed memory. In these systems, data must be sampled in the center of a narrow valid window, requiring fine-grained control over clock phase. Additionally, PLLs can perform de-skewing by aligning the internal clock network with an external clock, compensating for delays introduced by the FPGA's clock tree.

Together, the global clock network and clock management circuitry ensure that high-speed synchronous designs can operate reliably across a wide range of conditions.

10 HDL-to-Hardware Flow

A common misconception is that FPGAs execute software in the same way as processors. In reality, an FPGA does not *run* code. Instead, the design process transforms a hardware description into a physical circuit by configuring the programmable resources of the device. The result is not a sequence of instructions, but a spatial arrangement of all the logic, memory, and interconnect components discussed.

10.1 Hardware Description Languages

Hardware Description Languages such as **VHDL** and **Verilog** describe hardware structure and behavior concurrently. Each statement represents a piece of circuitry that exists continuously and operates in parallel with all others. Unlike software languages, where statements execute sequentially, HDL describes how signals are connected and how they respond to changes over time.

From a conceptual standpoint, HDL is best viewed as a textual representation of a schematic. Assignments describe combinational logic, while clocked processes describe sequential elements such as registers and state machines.

10.1.1 Concurrency in Verilog: Combinational Example

Listing 1: Combinational Logic in Verilog

```
// These two assignments describe two separate logic circuits.
// Both circuits exist at the same time and continuously observe their
   inputs.
// When any input changes, both outputs are re-evaluated in parallel---
// there is no order of execution.

signal_a = input_1 & input_2;   // AND gate
signal_b = input_1 | input_3;   // OR gate
```

How to read this: The AND gate and the OR gate are physically separate pieces of hardware. They may share inputs, but each computes its output independently and simultaneously.

10.1.2 Concurrency in Verilog: Sequential Example

Listing 2: Sequential Logic in Verilog

```
// Both registers sample their inputs on the same clock edge.
// The logic feeding each register runs in parallel before the clock
   arrives.
// On the clock edge, both stored values update at the same instant.

always @(posedge clk) begin
    signal_a_reg <= input_1 & input_2;   // AND logic feeding register
       A
    signal_b_reg <= input_1 | input_3;   // OR logic feeding register B
end
```

How to read this: The AND logic and OR logic are evaluated continuously and independently. The clock does not sequence the operations; it only defines the moment when both results are captured.

10.2 Synthesis

The first stage of transforming HDL into hardware is synthesis. During synthesis, the tool parses the HDL and translates it into an abstract representation composed of Boolean equations, registers, and memory structures. Logical optimizations are then applied to remove redundancy and simplify expressions using Boolean algebra.

Once optimized to use minimal physical resources, the design is technology-mapped onto the physical resources of the target FPGA. Combinational logic is grouped into functions that fit within Lookup Tables, arithmetic operations are mapped onto carry chains or DSP slices, and memory constructs are implemented using distributed RAM or Block RAM. The result of synthesis is a **register-transfer level (RTL)** netlist that expresses the design in terms of the FPGA's native building blocks.

10.3 Placement and Routing

After synthesis, the design must be physically fixed on the chip through placement and routing, collectively referred to as implementation. Placement determines which specific logic blocks, memory blocks, and DSP slices on the silicon will implement each part of the theoretical design. A general objective is to minimize wire length and congestion while keeping logically related elements close together.

Routing then selects the exact paths through the programmable interconnect to connect these placed elements. Because routing resources are shared and finite, the router must balance timing requirements against congestion. Critical signals are given priority access to faster routes, while less timing-sensitive connections are detoured as needed. This stage is computationally intensive and often dominates build time for larger designs.

10.4 Static Timing Analysis

After placement and routing, the designer must determine whether the circuit can operate reliably at the intended clock frequency, for example 200 MHz. Rather than validating this through exhaustive dynamic simulation, FPGA toolchains rely on **Static Timing Analysis (STA)**. STA evaluates the timing behavior of the circuit mathematically by examining every possible data path between sequential elements, specifically from each launching flip-flop to every capturing flip-flop.

For each path, the tool computes the total propagation delay, which is the sum of the clock-to-Q delay of the launching flip-flop, the delay through the intervening combinational logic, and the delay introduced by routing. This value is then compared against the available time defined by the clock period. To satisfy the setup time requirement, the data must arrive at the destination flip-flop before the next active clock edge, reduced by the flip-flop's required setup time:

$$T_{\text{arrival}} < T_{\text{period}} - T_{\text{setup}}$$

If this condition is violated, a setup violation occurs, meaning the data arrives too late to be reliably captured. In such cases, the design cannot operate at the target frequency and must either be optimized or clocked more slowly.

STA also verifies hold time requirements, which ensure that data does not arrive too early. Specifically, the data must remain stable for a minimum duration after the clock edge so that the previous state is not overwritten before it is safely latched:

$$T_{\text{arrival}} > T_{\text{hold}}$$

Unlike setup violations, which can often be resolved by reducing the clock frequency, hold violations are independent of clock speed and represent a fundamental timing flaw. FPGA tools address these by intentionally increasing delay on overly fast paths, typically by inserting routing detours, to ensure the minimum hold time is satisfied.

By exhaustively checking both setup and hold conditions across all timing paths, static timing analysis provides a deterministic guarantee that the implemented circuit will function correctly under worst-case conditions, making it a cornerstone of reliable FPGA design.

10.5 Bitstream Generation

The final stage of the design workflow is the bitstream generation. At this point, the fully placed and routed design is converted into a binary configuration file. This file contains the values for every configuration memory cell in the FPGA, defining the LUT's truth tables, routing switch states, memory modes, and I/O standards.

When the FPGA powers up, the bitstream is loaded into the Configuration RAM. This process physically configures the device, instantiating the custom digital circuit described by the HDL. From that moment onward, the FPGA behaves as a dedicated hardware implementation of the design until it is reconfigured or powered down.

Concluding Remarks

Writing this gave me a much deeper appreciation for how FPGAs are engineered at a fundamental level. Rather than viewing them as abstract programmable logic, exploring their internal structure revealed how performance in an FPGA is achieved through deliberate architectural choices that balance flexibility, speed, and silicon cost. Understanding these trade-offs shifted my perspective from writing logic to analyzing hardware behavior and design intent. I continue to explore this curiosity through ongoing work in machine learning infrastructure, low-level systems, and chip design. **Thank you for reading all the way through.**