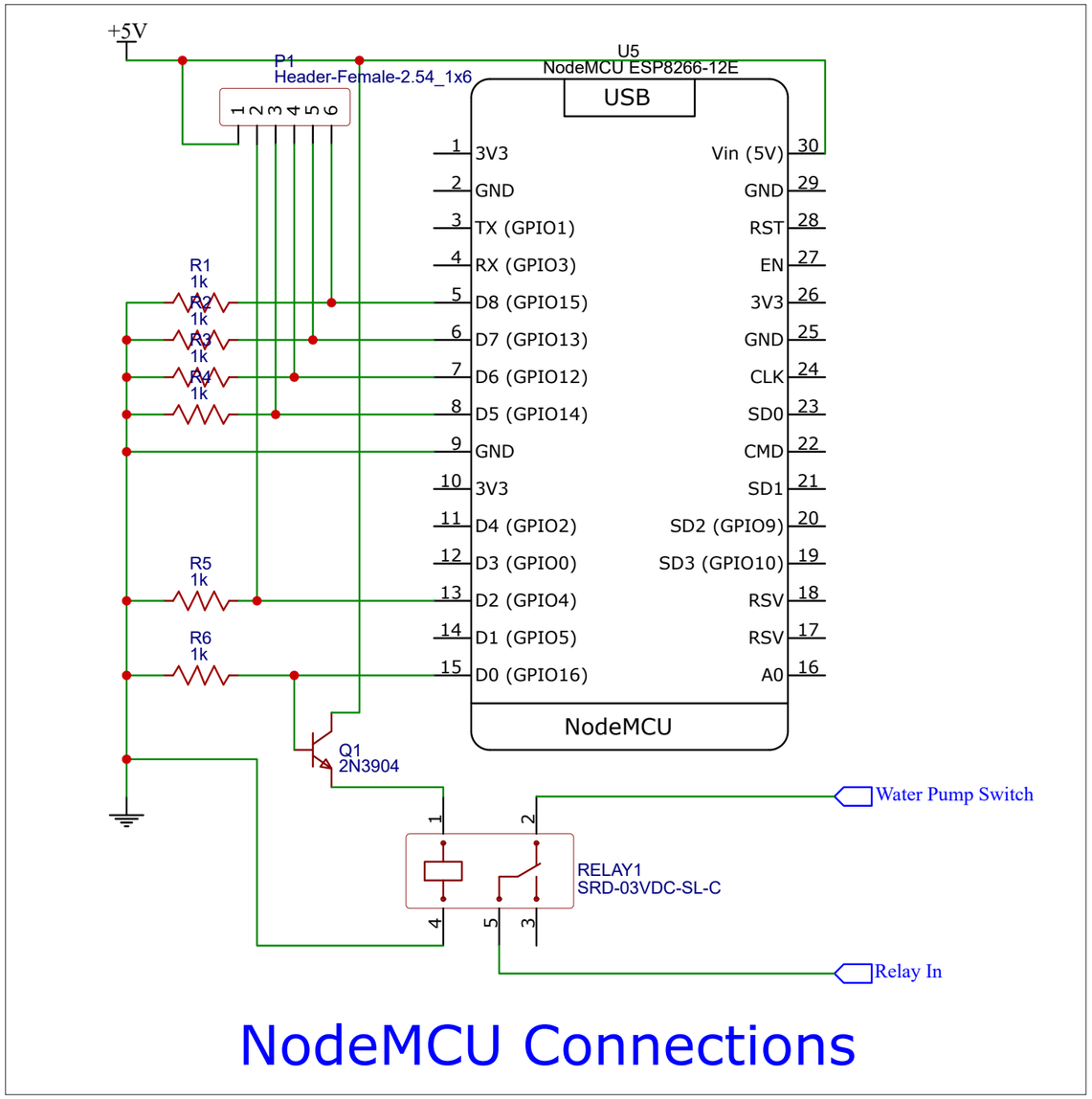

NodeMCU Connections

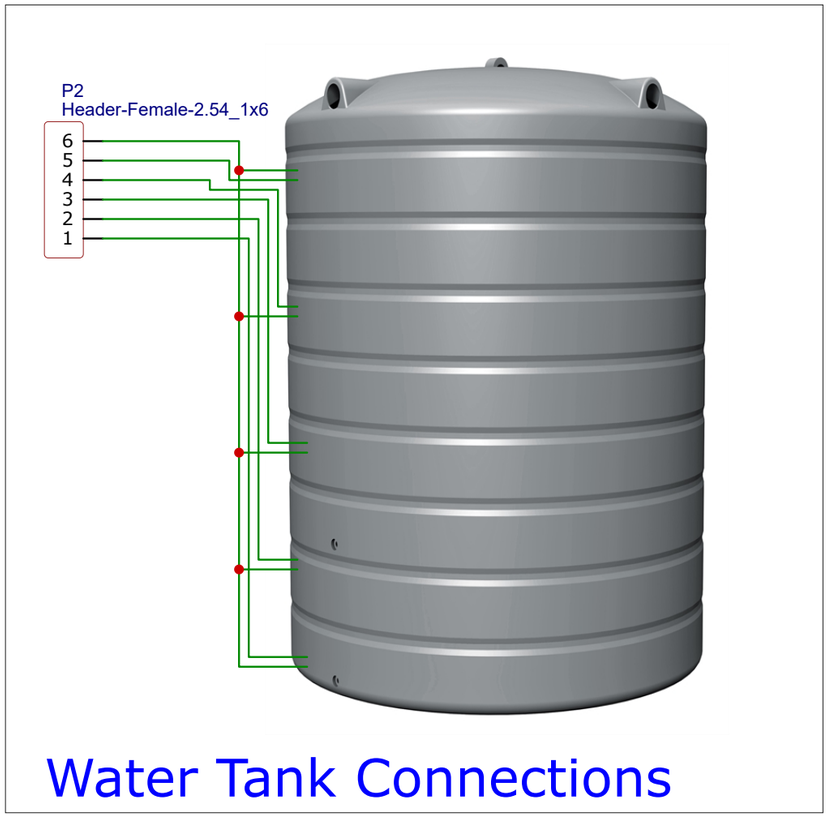

Water Tank Connections

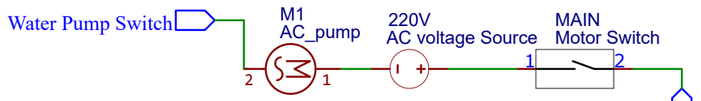

Pump Connections

TITLE: NodeMCU Schismatics		REV: 1.0
EasyEDA	Company: tutnabetu	Sheet: 1/1
	Date: 2019-03-10 Drawn By: Pranav Dudhane	