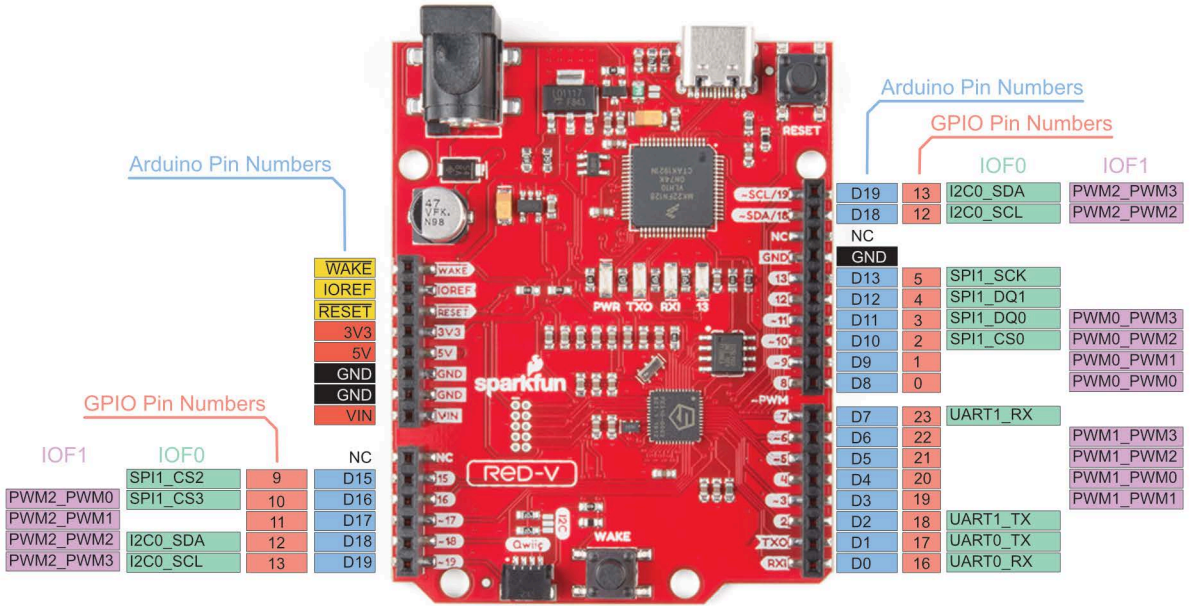
Arduino Pin Numbers
GPIO Pin Numbers
IOF1
IOF0
WAKE
IOREF
RESET
3V3
5V
GND
GND
VIN
NC
D15
D16
D17
D18
D19
PWM2_PWM0
PWM2_PWM1
PWM2_PWM2
PWM2_PWM3
SPI1_CS2
SPI1_CS3
I2C0_SDA
I2C0_SCL
9
10
11
12
13
Arduino Pin Numbers
GPIO Pin Numbers
IOF0
IOF1
D19
D18
NC
GND
D13
D12
D11
D10
D9
D8
D7
D6
D5
D4
D3
D2
D1
D0
13
12
5
4
3
2
1
0
23
22
21
20
19
18
17
16
I2C0_SDA
I2C0_SCL
SPI1_SCK
SPI1_DQ1
SPI1_DQ0
SPI1_CS0
UART1_RX
UART1_TX
UART0_TX
UART0_RX
PWM2_PWM3
PWM2_PWM2
PWM0_PWM3
PWM0_PWM2
PWM0_PWM1
PWM0_PWM0
PWM1_PWM3
PWM1_PWM2
PWM1_PWM0
PWM1_PWM1
sparkfun
RED-V
WAKE
RESET

(a)

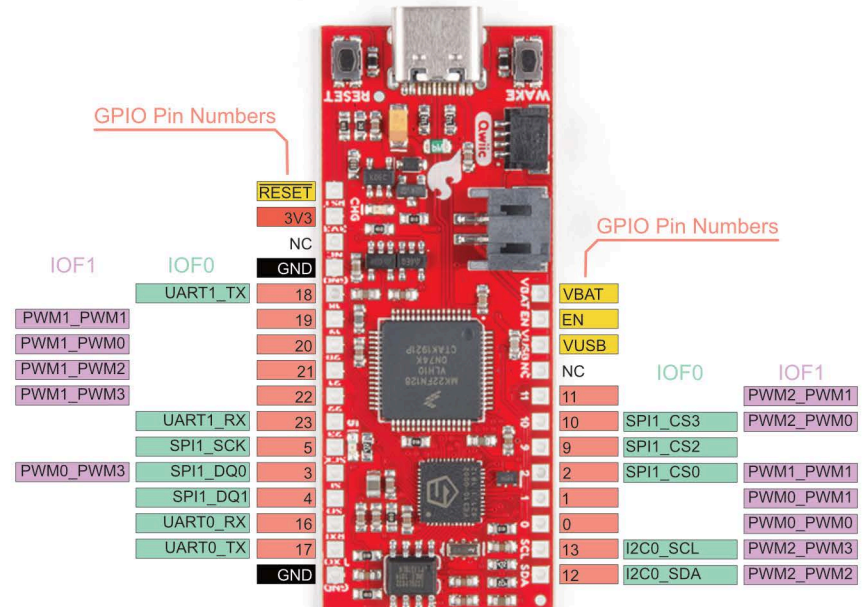
GPIO Pin Numbers
IOF1
IOF0
RESET
3V3
NC
GND
UART1_TX
PWM1_PWM1
PWM1_PWM0
PWM1_PWM2
PWM1_PWM3
UART1_RX
SPI1_SCK
PWM0_PWM3
SPI1_DQ0
SPI1_DQ1
UART0_RX
UART0_TX
GND
18
19
20
21
22
23
5
3
4
16
17
GPIO Pin Numbers
IOF0
IOF1
VBAT
EN
VUSB
NC
11
10
9
2
1
0
13
12
SPI1_CS3
SPI1_CS2
SPI1_CS0
I2C0_SCL
I2C0_SDA
PWM2_PWM1
PWM2_PWM0
PWM1_PWM1
PWM0_PWM1
PWM0_PWM0
PWM2_PWM3
PWM2_PWM2
RESET
WAKE

(b)