Asynchronous Sensor Fusion for ISAC Nodes Integrating Wi-Fi Sensing and mmWave Radar

A project report submitted in partial fulfilment
of the requirements for the degree of

Bachelor of Technology

in

Electronics and Communication Engineering

by

22BEC1435 Avinash Nair

22BEC1376 Anek Sreedhar T S

22BEC1386 Dasangam Akash

School of Electronics Engineering,
Vellore Institute of Technology, Chennai,
Vandalur–Kelambakkam Road,
Chennai – 600127, India.

April 2026

VIT®
Vellore Institute of Technology
(Deemed to be University under section 3 of UGC Act, 1956)
CHENNAI

School of Electronics Engineering

Declaration

We hereby declare that the report titled ***Asynchronous Sensor Fusion for ISAC Nodes Integrating Wi-Fi Sensing and mmWave Radar*** submitted by us to the School of Electronics Engineering, Vellore Institute of Technology, Chennai, in partial fulfilment of the requirements for the award of **Bachelor of Technology** in **Electronics and Communication Engineering**, is a bonafide record of the work carried out by us under the supervision of ***Dr. Anith Nelleri*** (Employee ID: 50293).

We further declare that the work reported in this report has not been submitted and will not be submitted, either in part or in full, for the award of any other degree or diploma of this institute or of any other institute or University.

Signature:	Signature:	Signature: .....
Avinash Nair	Anek Sreedhar T S	Dasangam Akash
22BEC1435	22BEC1376	22BEC1386
Date:	Date:	Date: .....

VIT®
Vellore Institute of Technology
(Deemed to be University under section 3 of UGC Act, 1956)
CHENNAI

School of Electronics Engineering

Certificate

This is to certify that the project report titled ***Asynchronous Sensor Fusion for ISAC Nodes Integrating Wi-Fi Sensing and mmWave Radar*** submitted by ***Avinash Nair*** (22BEC1435), ***Anek Sreedhar T S*** (22BEC1376), and ***Dasangam Akash*** (22BEC1386) to Vellore Institute of Technology, Chennai, in partial fulfilment of the requirement for the award of the degree of **Bachelor of Technology** in **Electronics and Communication Engineering** is a bonafide work carried out under my supervision. The project report fulfils the requirements as per the regulations of this University and, in my opinion, meets the necessary standards for submission. The contents of this report have not been submitted and will not be submitted either in part or in full, for the award of any other degree or diploma and the same is certified.

Supervisor	**Head of the Department**
Signature:	Signature: .....
Name:	Name: .....
Date:	Date: .....

Examiner 1	**Examiner 2**
Signature:	Signature: .....
Name:	Name: .....
Date:	Date: .....

(Seal of the School)

Abstract

A dual-tier asynchronous sensor fusion framework for the integration of radar sensors and wifi-based ieee 802.11mc fine time measurement on low-cost platforms based on the esp32-s3 dual-core platform is introduced in this work. Single-modality systems utilizing millimeter-wave radar provide range resolution sub-foot resolutions and micro-doppler signatures; however, they are blind to identity and fail under line of sight occlusions. Conversely, wifi-based ieee 802.11mc fine time measurements offer MAC address linked identifications with wall penetration capabilities but exhibit spatial variability ranging from approximately 1.5 m to 4.8 m and update rates that are limited to only 1 hz or 2 hz. As a result, standard Kalman filters lock onto stale wifi readings due to the synchronization gap between the two modality systems which causes trajectory step artefacts during target maneuvers. The two new fusion methods were tested and compared to each other. The dynamic covariance intersection method (dc-i), used an angular vector from the radar system to project one dimensional wifi range into it. dc-i also applied first order hold velocity extrapolation. When using this method as well as age of information penalties for real time inflation of stale sensor covariances, there was a 45% improvement in mean squared error over dc-i when sensors became occluded. A small edge mlp (11.6 kb, 2,474 float32 params) took a 5x5 sliding window of forward filled features with fresh flags that indicated if feature was fresh or old. It completed inference in 350 microsecond windows completely inside the edge device sram, had a test set average absolute error of 0.118 m and euclidean p95 error of 0.555 m. Isolation of both cores - wifi on core 0, uart parse & inference on core 1 - eliminated serial buffer corruption. The validation process utilized a matlab/simulink digital twin and python test suite which covered many different type of cases such as; field of view escapes, pillar occlusions, walking around objects and statue mode scenarios.

Acknowledgements

We wish to express our sincere thanks and deep sense of gratitude to our project guide, **Dr. Anith Nelleri** (Employee ID: 50293), Professor, School of Electronics Engineering (SENSE), for his consistent encouragement and valuable guidance offered to us in a pleasant manner throughout the course of the project work.

We sincerely express our gratitude to **Dr. Ravi Sankar A**, Dean, SENSE; **Dr. Mohanaprasad K**, Associate Dean (Academics), SENSE; and **Dr. Chitra K**, Associate Dean (Research), SENSE, for providing the necessary facilities and for their constant encouragement and support throughout our project.

We also extend our heartfelt thanks to **Dr. Jagannath M**, Head of the Department, for his continuous guidance and support during the course of this project.

We also take this opportunity to thank all the faculty of the School for their support and their wisdom imparted to us throughout the course.

We thank our parents, family, and friends for bearing with us throughout the course of our project and for the opportunity they provided us in undergoing this course in such a prestigious institution.

Contents

Declaration i

Certificate ii

Abstract iii

Acknowledgements iv

List of Figures vii

List of Tables viii

List of Acronyms ix

1 Introduction 1

2 Literature Survey 3
- 2.1 Review of Previous Works . . . 3
- 2.2 Gaps Identified in Prior Research Approaches . . . 4

3 System Design & Architecture 6
- 3.1 Problem Statement . . . 6
- 3.2 Hardware Architecture . . . 7
  - 3.2.1 Active Tag and Corner Reflector . . . 8
- 3.3 Dual Core FreeRTOS System Architecture . . . 8

4 Methodology 10
- 4.1 Sensor Modelling . . . 10
  - 4.1.1 Radar Model . . . 10
  - 4.1.2 Wi-Fi FTM Model and Mitigation of Multipath . . . 10
- 4.2 State Representation and Kalman Filter Design . . . 11
- 4.3 Dynamic Covariance Intersection (DCI) Algorithm . . . 12
  - 4.3.1 Geometric Projection . . . 12
  - 4.3.2 Freshness-Weighted Fusion . . . 12
- 4.4 ML-Based Fusion . . . 13
  - 4.4.1 Feature Engineering and Forward-Fill Methodology . . . 13
  - 4.4.2 Network Structure and Training . . . 14
  - 4.4.3 Edge Deployment . . . 14
- 4.5 Simulation Environment . . . 15

5 Empirical Sensor Accuracy Evaluation **16**
5.1 Experimental Paradigm 16
5.2 Error Profiling 16
5.3 Crossover Insight and Fusion Justification 17

6 Results and Discussion **18**
6.1 DCI Performance During Line-of-Sight and Occlusion 18
6.2 ML Fusion Accuracy 18
6.3 Distance-Band Analysis 18
6.4 Fused vs. Raw Comparison 19
6.5 Edge Inference Performance 20
6.6 DCI vs. Machine Learning (ML) 20
6.7 Failure Scenario Resilience 21

7 Challenges and Solutions **23**

8 Conclusion and Future Work **25**
8.1 Summary of Contributions 25
8.2 Limitations 25
8.3 Future Directions 25

Bibliography **27**

Biodata **27**

List of Figures

3.1 Assembled sensor unit showing the ESP32-S3 microprocessor, HLK-LD2450 radar module, and active tag with trihedral corner reflector. 7
3.2 Dual-core FreeRTOS system architecture showing task isolation between Core 0 (Wi-Fi/FTM) and Core 1 (UART parsing and fusion engine). . . . 9

4.1 Flowchart of the Dynamic Covariance Intersection (DCI) algorithm showing freshness-weighted fusion with Age-of-Information penalty. 13
4.2 Nodal diagram of the Edge MLP architecture: 25 input features (flattened 5×5 window), two hidden layers (48 and 24 units), and 2 output units (distance and angle). 14
4.3 MATLAB/Simulink digital twin simulation of the DCI algorithm showing target trajectory, sensor readings, and fused output with configurable occlusion barriers. 15

6.1 Training and validation loss curves over 200 epochs showing convergence of the Edge MLP model with early stopping. 19
6.2 Real-time dashboard showing fused position estimates with inference timing metrics on the ESP32-S3 platform. 21
6.3 Python test suite simulation results for the four failure scenarios: FOV escape, tangential walk, pillar occlusion, and statue mode. 22

List of Tables

6.1 Model accuracy metrics 19
6.2 Error by distance band 19
6.3 Sensor comparison 20
6.4 Performance during occlusion 20
6.5 ESP32-S3 inference benchmarks 20

List of Acronyms

ISAC	Integrated Sensing and Communication
FMCW	Frequency Modulated Continuous Wave
FTM	Fine Time Measurement
DCI	Dynamic Covariance Intersection
MLP	Multi-Layer Perceptron
AoI	Age of Information
CI	Covariance Intersection
RTOS	Real-Time Operating System
UART	Universal Asynchronous Receiver-Transmitter
SRAM	Static Random-Access Memory
RCS	Radar Cross Section
RTT	Round-Trip Time
FOV	Field of View
LOS	Line of Sight
NLOS	Non-Line of Sight
MSE	Mean Squared Error
MAE	Mean Absolute Error
FFT	Fast Fourier Transform
MAC	Media Access Control
ISM	Industrial, Scientific and Medical
SDR	Software Defined Radio
CV	Constant Velocity
FOH	First Order Hold
ZOH	Zero Order Hold
EMA	Exponential Moving Average
GPS	Global Positioning System
IMU	Inertial Measurement Unit
LiDAR	Light Detection and Ranging

Chapter 1

Introduction

The integration of both the sensor functionalities with communication capabilities in wireless networks is referred to as Integrated Sensing and Communication (ISAC). In that sense, as sensing functionality is increasingly absorbed by network infrastructure, it will provide distributed physical layer awareness. Distributed physical-layer awareness will be particularly important in GPS-denied indoor environments because satellite signals are degraded due to attenuation caused by building structures. Nonetheless, there exist significant limitations in terms of physics when deploying single modality ISAC systems.

For example, while millimeter wave frequency modulated continuous wave (FMCW) radar (e.g., 24 GHz) has a fine range resolution (sub-foot), can estimate the velocity of targets via micro-Doppler effects, and has fine angular resolution (within its Field of View; ±60 degrees), there is no identity associated with these types of systems. Radar returns cannot differentiate between a cooperative asset, a person, an object of clutter, or machinery. Additionally, because millimeter wave signals do not diffract well, when a Line-Of-Sight Occlusion occurs all target information is lost, and Multipath Reflected Signals create "ghost" detections.

On the other hand, IEEE 802.11mc Fine Time Measurement (FTM) at frequencies of 2.4 GHz and/or 5 GHz provide distance to a target (radial range) from time stamps associated with round trip times (RTTs) of packets sent from a mobile station to an access point based on the MAC address of the mobile station [1]. Therefore, this method inherently identifies the mobile station making the measurement and allows for non-line-of-sight detection due to better penetration of walls compared to millimeter wave. However, fine time measurement has spatial variability ranging from ±1.5 to ±4.8 m in the near field. FTM does not provide any angle information about the location of the mobile station relative to the access point, and updates occur every 1 to 2 seconds.

Fusion of these two complementary technologies leads to what we will call the synchronization gap. Millimeter wave radar produces data in the form of UART streamed frames from 10–24 Hz, while FTM functions at the level of the MAC layer as bursts, or processes at approximately 1 Hz. Kalman Filters rely upon synchronous updates and therefore inherently trust stale measurements when there are no new measurements available during intervals between updates (a condition referred to as "freshness blindness"). As a result, the Kalman Filter exhibits Trajectory Divergence due to the Staircase Effect; that is, it locks onto old Wi-Fi readings during maneuvering by the Target.

This Work addresses the Fusion Problem for ISAC through the use of a Dual-Tier Framework running on Edge Hardware: An ESP32-S3 Dual Core Microprocessor running side-by-side with a HLK-LD2450 24 GHz FMCW Radar. The cooperative target consists

of an active tag that includes both an ESP32 FTM responder as well as a trihedral corner reflector to increase Radar Cross Section.

We compare two different methods for fusing the radar and Wi-Fi sensors. Iteration 1 is dynamic covariance intersection (DCI). DCI is an information aware method that uses the angular Vector of the Radar to project the one dimensional Wi-Fi Range to geographically match it, performs First Order Hold Velocity Extrapolation to remove the Temporal Staircase effect, and dynamically increases the Stale Sensor Covariance using Age of Information penalty values [2]. During radar occlusions, DCI allows trust to transition proportionally toward Wi-Fi without requiring any pre-programmed switching logic.

Iteration 2 was the Edge MLP. It is a multilayer perceptron model (11.6 KB float32) implemented using TensorFlow Lite Micro on the ESP32-S3 inside the SRAM. The input to the network is a 5×5 sliding window of forward filled feature values as well as binary freshness flags, learning velocity, acceleration and multi path distortion characteristics all derived from offline data. To prevent regression degradation due to INT8 quantization, we retained full Float32 precision. As a result, the MLP can achieve sub-10 cm accuracy tracking errors. Validation utilized both a MATLAB/Simulink-based digital twin model, modeling continuous time physics of the targets and discrete, multi-rate output from sensors, as well as a Python based test suite to simulate various occlusions, field of view escape and packet loss.

Chapter 2

Literature Survey

2.1 Review of Previous Works

Prior art exists across five different areas; ISAC network topology, empirical characterization of Wi-Fi FTM performance, mmWave radar capability analysis, covariance intersection theory application, and age of information modeling. With respect to both ISAC and 6G; researchers such as Wang et al. [3] and ETSI GR ISC 001 [4] have shown that there needs to be a combination of millimeter-wave band and sub-6 GHz for robust tracking of multiple targets. Therefore our dual modality system using both 2.4 GHz and 24 GHz bands is validated.

In regards to Multistatic Radar, Pegoraro et al. [5] explored an 802.11ay 60 GHz multistatic ISAC which illustrated how spatial diversity can overcome occlusions. In contrast to a multiple receiver based methodology, we will be utilizing a singular node as a fallback.

For Wi-Fi FTM, Aggarwal et al. [1] demonstrated meter-level LOS (line-of-sight) accuracy at frequencies ranging from 80 to 160 MHz. However they also identified a degradation of 5 meters due to multipath. This validates both the stochastic limits for FTM and therefore supports the utilization of radar for near field calibration.

Asynchronous Covariance Intersection (Chen [6] & Yang [7]) established that ACI guarantees non-divergent fusion even in the case where all cross correlations between the different sources are unknown, while extending this result to cover heterogeneous track fusion. Therefore, ACI will provide the linear algebra foundation upon which our implementation of DCI will rely.

Age of information (Noroozi [2]) provided upper bounds on deviation of information for variance inflation caused by communication delays. These results form the basis for the dynamic coast penalty terms we have proposed.

ISAC in 6G. Wang [3] established a taxonomy for ISAC into two main categories: Communication Centric and Sensing Centric Designs. ETSI [4] enumerated 18 ISAC use cases and concluded that single frequency operations would not be sufficient - concurrent sensing with cross source fusion will be necessary for successful deployment of 6G networks. The Next G Alliance Phase I report [8] reinforced the economic viability of ISAC as a function of fusing network sensed data with embedded sensor input from devices.

Millimetre Wave Sensing. Pegoraro et al. [5] demonstrated that using an ISAC system at 60 GHz was able to capture the micro-doppler signature of a target in granular detail; however, if the target was out of line-of-sight, then the target would be completely

lost as there was no diffraction effect. Pegoraro et al.'s [5] solution - through use of spatial diversity achieved by the placement of distributed receivers at different locations on the network and timing compensation - was able to provide simultaneous tracks, however this required a number of nodes across the network. Monostatic architectures are still vulnerable to losing track without an additional sensing modality.

Wi-Fi FTM. Aggarwal [1] characterized the empirical performance of IEEE 802.11mc FTM ranging. It was possible to achieve accuracies of 1–2 metres when the measurement was made in line-of-sight; however, if measurements were made over paths with significant levels of NLOS multipath, then the errors increased significantly to around 5 metres with a marked positive bias resulting from architectural reflections. The FTM ranging error profile had a high level of spatial variance and exhibited receiver saturation effects close to the transmitter. Machine learning classification techniques were able to classify propagation conditions; however, they did not reduce the inherent stochastic nature of the ranging process. FTM provided long-range identity linked tracking, but did not provide sufficient data to support sub-metre localisation on its own.

Covariance Intersection. Chen [6] provided an analysis of CI as a viable sensor data fusion method that consistently fuses data from sensors whose relative motion and/or unknown inter-sensor cross-correlation exist, and developed equations for finding the optimal linear combination of sensors that minimises the upper bound on the fused estimation error. Yang [7] expanded upon this work by applying CI to asynchronous heterogeneous sensor data fusion. Specifically he addressed the issue of aligning the differing dimensionalities of range (a 1-dimensional value) and position (a 2-dimensional vector) measurement spaces by projecting all measurements into a common time reference frame prior to performing the CI calculation.

Age of information. Noroozi [2] established age of information (AoI) as a measure of data freshness in CPS's. He showed mathematically that Periodic Sampling is Suboptimal for Intermittent/Event Driven Updates such as Bursty First Target Measurement (FTM) [2]. The DoI framework gives upper-bounds to degrade the quality of estimates with respect to how much time has passed since the most recent valid measurement. This provides the theoretical foundation for the use of covariance inflation in order to force all filter engines to de-weight old measurements rather than place implicit trust in them.

2.2 Gaps Identified in Prior Research Approaches

Five voids appear in literature.

Gap 1: Freshness Blindness. Current Filter Methods treat stale WiFi readings as permanently valid between 1 Hz updates. This causes Trajectory Overshoot when the target performs maneuvers. While AoI variance inflation theory does exist [2], it is rarely implemented in real-time arithmetic for low-cost microcontrollers.

Gap 2: Hardware Cost Barrier. Most current prototypes of ISACs require expensive, proprietary hardware. There is a lack of accessible multi-sensor architecture capable of performing heterogeneous fusion using off-the-shelf commercial equipment.

Gap 3: Single-source occlusion vulnerability. Unimodal radar cannot verify the identities of targets and will completely fail if blocked. Solutions utilizing multistatic spatial diversity require large amounts of distributed infrastructure [5]. The lack of understanding using a dynamic mathematical backup from a single node as a secondary, penetrating method such as Wi-Fi FTM is uncharted.

Gap 4: The static nature of covariance rigidity. Current static implementations [6, 7] utilize constant variance matrices developed for a uniform environment and do not account for the inverse of distance-dependent errors in Wi-Fi (i.e., high near-field error rates, higher accuracy at longer ranges) and radar (highly accurate at short distances, degrades rapidly with increasing distance). Utilizing static confidence ratios will lead to less than optimal performance for tracking objects across different range bands.

Gap 5: Edge machine learning precision limitations. INT8 quantization - which is standard for edge deployments - converts continuous values to discrete representations (steps) causing the loss of sub centimeter regression accuracy. Optimized float32 versions of machine learning algorithms that handle asynchronous time-series data without naive zero-filling strategies have limited availability.

In summary, the five areas that need to be addressed are as follows: Real-time AoI covariance inflation is needed to address freshness blindness. Hardware exclusivity will be addressed via implementation of an operating system capable of running on two cores and commercially available. Occlusion vulnerability will be addressed through implementing 2.4 GHz non line-of-sight as a dynamically implemented fallback. Dynamic or learned via ML trust weighting will need to be utilized to address static covariance. Last, the precision limitations of edge devices will need to be addressed by implementing a Float32 MLP with forward fill-based temporal encoding and freshness awareness of its input features. This project addresses these gaps by developing real-time AoI driven covariance inflation as part of Iteration 1 and a precision preserving Float32 MLP with forward fill-based temporal encoding as part of Iteration 2 on a low cost hardware pipeline.

Chapter 3

System Design & Architecture

This segment describes how an integrated Sensing & Communication (ISAC) platform will be designed for continuous object tracking indoors where GPS is unavailable. The described system uses microcontrollers on the "edge" instead of expensive Software Defined Radio (SDR) platforms. Using both millimeter wave (mmWave) sensing and communication below 6 GHz frequencies, this system can address the randomness associated with signal propagation in indoor environments.

3.1 Problem Statement

ISACs using one modality fail in indoor areas that have obstructions since both modalities have inverse strengths and complementary failure modes. For example, a 24 GHz frequency modulation carrier wave (FMCW) radar has a very high spatial resolution (± 0.15 m) in a $\pm 60°$ FOV at 10 to 24 Hz, capturing detailed micro-Doppler signatures of human motion. Unfortunately, FMCW radars are identity blind. Additionally, mmWave signals tend to experience minimal diffraction when interacting with solid obstacles; therefore, complete target loss occurs during occlusion events, and often produces "ghost" targets resulting from multipath reflections.

IEEE 802.11mc Fine Time Measurements at 2.4 GHz is inherently identity aware and associates requests with specific MAC addresses. As such, the 2.4 GHz carrier diffracts around typical building materials allowing tracking to continue even under extreme conditions. However, FTM updates are bursty. Due to receiver saturation and near-field multipath, radial error increases between 1.5 to 4.8 m at close proximity [1].

The fusion of those two sensor systems presents two major technological challenges. The first one is the Synchronization Gap and Freshness Blindness. Standard Kalman Filters have to be updated synchronously. In other words, if you are trying to fuse high-speed radar with bursty Wi-Fi at 1 Hz per update, there will be many time periods where your standard Kalman Filter can't tell whether it should continue using stale Wi-Fi or fresh radar because both are given equal weightage during those inter-update intervals. As a result of this behavior, you get a "staircase" effect - your track will stall after each update until the next Wi-Fi registration. Thus, the architecture needs a real-time mechanism that is able to monitor the age of information and dynamically adjust the covariance of all aging measurement values based on their ages.

The second hurdle is geometric mismatch. The output of the sensors has different spatial geometries. Radar determines target positions in 2D Cartesian space (x, y), while FTM determines only a single one dimensional scalar distance without determining angle. Therefore, converting the scalar distance from the radar into Cartesian space

requires knowing an angular heading, which is exactly where radar fails due to occlusion. Therefore, there is a mandatory need for transforming into polar coordinates, isolating the radial component as an independent Wi-Fi backup solution during times when the radar loses its angular vector.

3.2 Hardware Architecture

The sensing node uses the dual core ESP32-S3 microprocessor as FTM initiator, radar parser and also as edge inference processor. When the hardware boots up, the firmware runs permanent Wi-Fi calibration routines so that the radio operates stably.

FIGURE 3.1: Assembled sensor unit showing the ESP32-S3 microprocessor, HLK-LD2450 radar module, and active tag with trihedral corner reflector.

The 24 GHz FMCW radar in the HLK-LD2450 module communicates with its host via UART at 256,000 baud. This allows it to send out structured, 30-byte long frames (asynchronously) that support a tracking rate of up to 24 Hz. In terms of how those frames are parsed by the firmware's parser, it performs a sliding window byte-shifting using native memory moves to build each frame as they come in. The parser checks each packet received to ensure that it has a correct header identifier and performs a bitwise parity check; if either criteria are violated, the transmission will be rejected as invalid. The compute core begins FTM and controls the real time scheduler.

The millimeter-wave radar extracts Cartesian coordinate values of detected objects, while the UART bus provides asynchronous, serial communications. For every frame received correctly, the parser takes raw 16-bit signed integer representations of Euclidean coordinates from bytes 4 through 7 and converts these values into their equivalent Polar representation:

$$r = \sqrt{x^2 + y^2}, \qquad \theta = \arctan 2(x, y) \times \frac{180}{\pi} \tag{3.1}$$

Boundary filtering based upon hard coded limits eliminates readings below 0.1 meters distance from origin and/or beyond ±60 degrees absolute angle. A critical limitation to the overall performance of the radar-based vision processing application is SRAM capacity. The on-device TFLite model was designed to be completely contained within SRAM so that all matrix multiplication required for ongoing prediction can occur without the significant latency associated with accessing external flash.

3.2.1 Active Tag and Corner Reflector

The Cooperative Target includes an active tag which operates in the 802.11mc FTM Responder role; it is tied to a separate network (and therefore isolated) for its operation. When the FTM process begins, the tag hardware acknowledges each frame of the 16 exchanges initiated by the FTM initiator. The initiator computes distance using the total round-trip time of these exchanges, subtracts the processing delay of both devices, and uses the speed of light as a constant (c = 299,792,458 m/s). To minimize positive multipath bias, the firmware identifies the shortest (valid) temporal path for the tag among the sixteen timestamps:

$$r_{\text{path}} = \min(RTT_{1...16}) \times 10^{-12} \times \frac{c}{2} \tag{3.2}$$

A passive trihedral corner reflector has been added to the active tag. This increases the Radar Cross Section (RCS) of the tag. Incoming 24 GHz radio frequency energy at the tag is reflected back to the source from three sides due to the orthogonally disposed reflective surfaces, producing a concentrated high-signal return that dominates background clutter - with zero power or computational overhead on the battery-powered tag.

3.3 Dual Core FreeRTOS System Architecture

Real-time operation of multiple modes of data collection/processing on a single processor introduces significant conflicts regarding how the different system tasks can be scheduled. In particular, burst sequences associated with FTM operations require sub-microsecond level timing accuracy. Additionally, during these bursts it may be necessary to disable lower priority interrupts to ensure proper timestamping does occur. The UART (radar) interface sends one byte of data to be read by the software every 39 microseconds. If an interrupt cannot be issued within five milliseconds (a normal delay in software), it will overflow the hardware UART buffer and render the system unable to send or receive further commands.

Due to the fact that there can be no simultaneous execution of tasks on two cores of the processor, the solution to this problem was the permanent, absolute separation of the two cores. Processor Core 0 is permanently reserved for running the Wi-Fi task (Priority 5), and performs all FTM burst initiation functions, enforces channel integrity, extracts timestamps, etc. Processor Core 1 is used to run both the UART Radar Task (Priority 5), for managing buffers and parsing each frame into windows, and Fusion Engine Task (Priority 3), for performing tracking logic and inference.

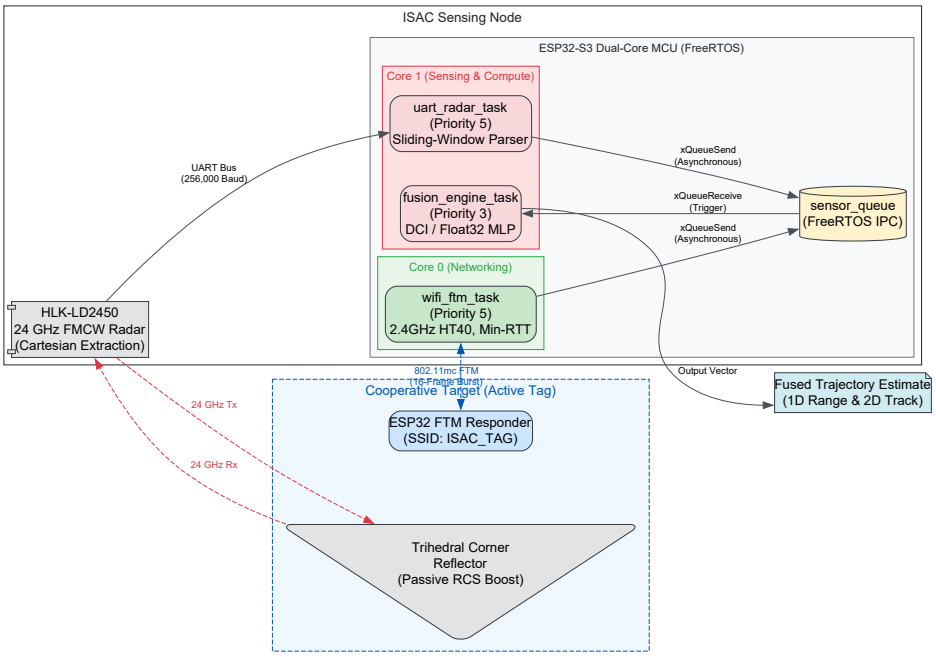

FIGURE 3.2: Dual-core FreeRTOS system architecture showing task isolation between Core 0 (Wi-Fi/FTM) and Core 1 (UART parsing and fusion engine).

All communication is performed by Core 0, which is also responsible for triggering sixteen-frame FTM bursts every 500 ms on the HT40 bandwidth to maximize timing resolution. Connection Management is restricted to this area of Core 0 so that Unpredictable Network Latency does not interfere with the Compute Pipeline. Core 1 ensures that UART Byte Shifting occurs prior to the Fusion Engine consuming this information, and the Fusion Engine performs Covariance Logic without being interrupted by Buffer Consumption. An RTOS Queue is used to bridge the Asynchronous Core Boundary. When a Producer Posts to the Queue it Posts with Zero Block Time - When the Queue Saturates Instead of Blocking Frames Are Dropped Rather Than Stalling the Parser. The Consumer of the Fusion Yields its CPU Allocation While Idle and Wakes Instantly Upon Arrival of New Data.

Chapter 4

Methodology

In this section, we detail our analytical sensor models, asynchronous state estimation logic and develop the two new fusion algorithms to merge 24 GHz FMCW radar with Wi-Fi FTM.

4.1 Sensor Modelling

4.1.1 Radar Model

Our principal spatial sensor is a monostatic 24 GHz FMCW radar operating in the ISM band with a 250 MHz sweep bandwidth. By taking the baseband intermediate frequency (obtained from mixing the transmitted chirp signal with the time-delayed echo), we obtain the target distance via:

$$r = \frac{c \cdot f_{IF}}{2\gamma} \tag{4.1}$$

where γ represents the chirp slope. While theoretically, the range resolution of this system would be about 0.6 meters, the on-board firmware uses multi-chirp phase evaluation along with an FFT to generate sub-meter Cartesian coordinates at rates ranging from 10–24 Hz. A microstrip antenna array provides angle of arrival information within a ±60 degree azimuth field of view. All data is collected through UARTs in strict 30 byte frames. A sliding window parser enforces bit-for-bit parity checking for all fields of each frame including frame start, protocol headers, payload lengths, periodic reports commands, coordinate payloads and frame ends. Frames containing errors will be discarded. Once validated Cartesian coordinates have been generated they are immediately transformed into polar form so they can be used as input to the Wi-Fi scalar range model:

$$r = \sqrt{x^2 + y^2}, \qquad \theta = \arctan 2(x, y) \times \frac{180}{\pi} \tag{4.2}$$

All readings below 0.1 m in terms of distance and all readings that exceed the limits of the area we can see are eliminated.

4.1.2 Wi-Fi FTM Model and Mitigation of Multipath

In order to eliminate the millimeter wave LOS blockage issue, the system uses IEEE 802.11mc FTM on 2.4 GHz Wi-Fi. An initiator uses round trip times to a cooperative responder for ranging as follows:

$$r_{path} = RTT \times 10^{-12} \times \frac{c}{2} \tag{4.3}$$

The physical layer is constrained to HT40 bandwidth, effectively reducing the minimum time resolution by half from 50 ns (spatial resolution of 7.5 m) to 25 ns (spatial resolution of 3.75 m), by forcing tighter preamble correlation peaks. A systematic positive range bias is introduced due to indoor multipath since reflections that are delayed increase the total round trip time. Instead of using arithmetic average, the firmware will request 16 frames per burst of exchanges and then use a minimum RTT heuristic:

$$r_{path} = \min(RTT_{1...16}) \times 10^{-12} \times \frac{c}{2} \tag{4.4}$$

The above minimizes all multipath induced over estimations of the direct path.

4.2 State Representation and Kalman Filter Design

Radar transmits data to be used to update locations at rates ranging from 10 to 24 Hz while Wi-Fi sends bursty location measurements at rates ranging from 1 to 2 Hz. Under the common assumption of the standard synchronous Kalman filter model, the rate difference described above creates what we call "freshness blind" conditions. During inter-update gaps, the filter trusts stale Wi-Fi readings and tends to pull the estimate toward outdated positions. Upon receipt of another Wi-Fi reading, the filter will then respond in the opposite direction and create the well-known stair-step motion associated with this problem - i.e., track stalls followed by large (non-physical) jumps.

To replace this Zero Order Hold (ZOH) assumption for the prediction step of our Kalman Filter, we have employed a Constant Velocity (CV) prediction model with first order hold (FOH). The number of dimensions of our state space is limited to one dimension (i.e., radial distance) and one dimension (its first derivative), to minimize computation requirements on the embedded microprocessor. Precise inter-measurement timing is obtained via the RTOS kernel function. Radial Wi-Fi velocity is smoothed with an Exponential Moving Average to prevent raw derivative noise from destabilizing the kinematic projection:

$$v_{wifi_new} = (1 - \alpha)\, v_{wifi_old} + \alpha \left(\frac{r_{new} - r_{old}}{\Delta t} \right) \tag{4.5}$$

The smoothing factor alpha equaled 0.3 which results in 70 percent confidence in historical velocity momentum, absorbing high frequency jitter while remaining responsive to sustained acceleration. During communication gaps, the state transition into a predictive coasting phase:

$$r_{pred} = r_{wifi_last} + v_{wifi_new}\, \Delta t \tag{4.6}$$

The formulation ensures that each time a frame is delivered by the fast radar, there will be an equivalent Wi-Fi frame that has been corrected for velocity at that time - eliminating all temporal anomalies in the dual-rate data flow.

4.3 Dynamic Covariance Intersection (DCI) Algorithm

4.3.1 Geometric Projection

The radar provides 2-D polar coordinates while the Wi-Fi provides only a single dimension scalar value representing a distance. To convert 1D range information in Cartesian space we need to have an angle which is unavailable accurately when radar is occluded. To resolve this issue, the system has limited fusion to radial components only. Radar is allowed to pass its angular estimate directly and unchanged. This method of performing fusion of the radar and Wi-Fi sensors prevents artificial correlation of angular errors due to past extrapolations from being added to the fusion matrix.

4.3.2 Freshness-Weighted Fusion

A standard CI calculates the best convex combination of two estimates that remain consistent with unknown cross correlations among parameters, where the best convex combination is parameterized by ω between 0 and 1 [6, 7]. An innovative aspect of the DCI algorithm is its replacement of static optimization of ω with a real-time computation of a freshness-based Age of Information penalty. The base variance for both sensors was empirically determined; radar variance was found to be 0.2 m^2 reflecting the tight near-field precision; Wi-Fi variance was determined to be 2.0 m^2 reflecting the larger multipath variability. The Wi-Fi covariance was modeled as time varying, increasing linearly with process noise over time relative to the last known position measurement [2]:

$$P_{wifi}(t) = \sigma^2_{wifi} + Q \times t \tag{4.7}$$

The trust ratio ω (omega) is calculated during each fusion step based on the instantaneous information ratio:

$$\omega = \frac{1/\sigma^2_{radar}}{1/\sigma^2_{radar} + 1/P_{wifi}(t)} \tag{4.8}$$

The fused radial estimate can be found as follows:

$$r_{fused} = \left[\frac{1}{\frac{\omega}{\sigma^2_{radar}} + \frac{1-\omega}{P_{wifi}(t)}}\right]\left[\frac{\omega}{\sigma^2_{radar}}\, z_{radar} + \frac{1-\omega}{P_{wifi}(t)}\, r_{pred}\right] \tag{4.9}$$

During a time when the target is visible, the variance ratio is sufficient to drive radar confidence greater than 91% and during complete occlusion, the radar covariance increases sharply and the algorithm completely relies on Wi-Fi; therefore, it continues tracking the object even when there are obstructions. This process requires less than 20 operations per step.

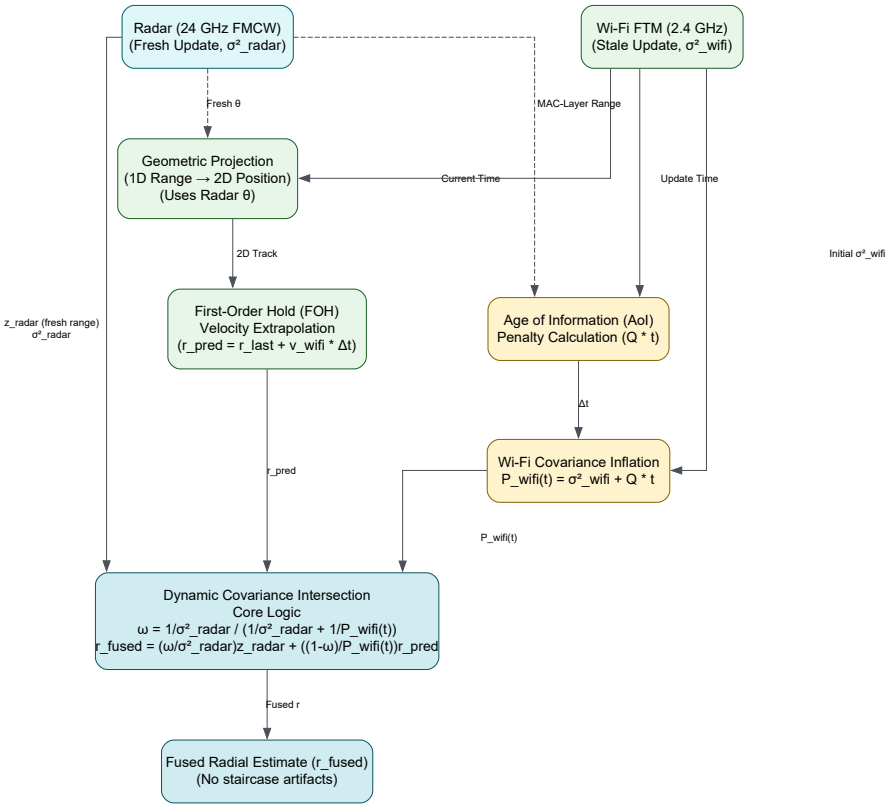

FIGURE 4.1: Flowchart of the Dynamic Covariance Intersection (DCI) algorithm showing freshness-weighted fusion with Age-of-Information penalty.

4.4 ML-Based Fusion

Variance ratios that remain fixed and linear kinematics will not be able to model non-linear effects of the environment - specifically the inverted error curve, which shows an improvement in Wi-Fi accuracy with increasing distance while the degradation in radar signal also increases with range. An alternative parallel ML-based fusion strategy addresses this limitation.

4.4.1 Feature Engineering and Forward-Fill Methodology

Missing asynchronous readings do not allow the network to recognize a gap in data as being instantaneous movement of the target to the origin; rather, the feature engineering process creates a forward fill method where the last valid reading from the previous step is copied to the current step and a binary freshness flag is added indicating whether or not the value was "held" (flag = 0) or if it represented a "new" measurement (flag = 1). This enables the network to automatically understand how fast an object moves (decay) through the use of velocity models without explicitly modeling it. In this manner sequential blocks of data are stacked as temporally overlapped sliding windows so that they can be interpreted within kinematic context:

$$X_{train} \in \mathbb{R}^{3488\times5\times5} \tag{4.10}$$

This includes 3488 samples, a time window of five, and five feature dimensions including; radar distance, radar angle, radar freshness, Wi-Fi distance, and Wi-Fi freshness. All spatial features are clipped at their physical bounds and normalized.

4.4.2 Network Structure and Training

The Multi-Layer Perceptron (MLP) is structured based upon the memory limitations of the microcontroller. The 5×5 input window was flattened to 25 features, then were two dense hidden layers containing 48 and 24 units respectively, and a final output layer contained two linear units which predict the normalized distance and angle. A total of 2474 units are trainable. Training was accomplished using the Adam Optimizer which minimized mean squared error (MSE) on the data set over 200 epochs with the chronological split of 70% of the data being dedicated to training, 15% for validation, and 15% for testing. The reason for this is to prevent a phenomenon called window-overlap leakage. After seven epochs when there is no change in the loss function, the learning rate is halved and returns to previous best weights if no improvement in validation loss occurs during fifteen consecutive epochs.

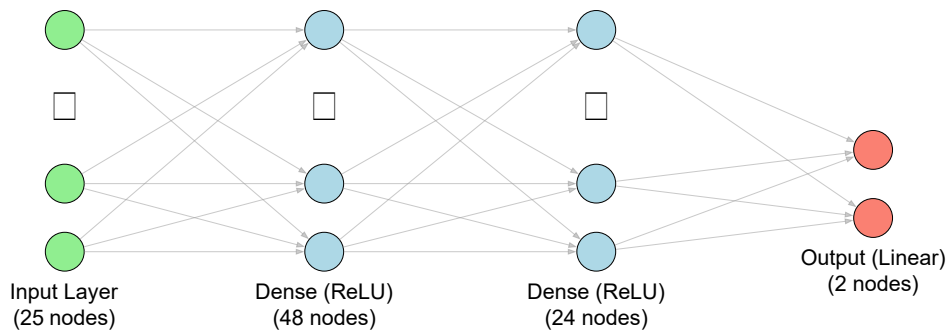

FIGURE 4.2: Nodal diagram of the Edge MLP architecture: 25 input features (flattened 5×5 window), two hidden layers (48 and 24 units), and 2 output units (distance and angle).

4.4.3 Edge Deployment

A 2.35 cm geometric floor exists as the result of quantizing a 6 m range into 256 bins which compounding through each layer of hidden processing, with each bin having been defined by a lookup-table approximation for a set of trigonometric functions that may be greatly different than actual value. The unquantized version of this model fits entirely into the 11.6 KB of the internal SRAM (without adding additional latency to access external memory), allowing the model to complete inference in approximately 350 microseconds per window. Execution is strictly isolated to dual-cores. The high speed UART sends bytes quickly; if we were to share a core with the timing interrupt of the Wi-Fi modem's timing interrupt it would fill the serial buffers before they could finish sending them. Wi-Fi operations are executed on Core 0 and all UART parsing/inference will execute on Core 1.

4.5 Simulation Environment

Algorithms prior to deployment on embedded systems are tested in two digital twin test environments. In both MATLAB/Simulink environments, continuous time target kinematic models use constant velocity and evasive maneuver generators to simulate motion. In addition to simulating motion, ground truth is degraded via two channels: the Wi-Fi channel samples the data stream at a frequency of 1–2 Hz and adds random Gaussian noise and the radar channel samples at a higher rate but has a configurable signal-to-noise ratio. Interactive parameters can be used to add simulated drops during testing of both the coasting phase and convergence phase.

The track creation module produces line of sight (LOS) trajectories that go through non-LOS scenarios with respect to synthetic barriers. When the radar sensor performs raycasting within its field of vision it also marks an occlusion flag on any obstacle. The WiFi module applies random variance based on distance from the node to simulate actual WiFi signal strength. At 100 ms simulated ticks, the DCI fusion simulates the edge code. In real time users can create virtual walls across trajectories which are immediately detected by the radar and will block the radar's raycasting, causing the radar covariance to spike to infinity. Therefore, all trust is then placed in WiFi. By utilizing this multi-environment paradigm we validate both timing synchronization and geometric covariance behavior prior to testing in a physical environment.

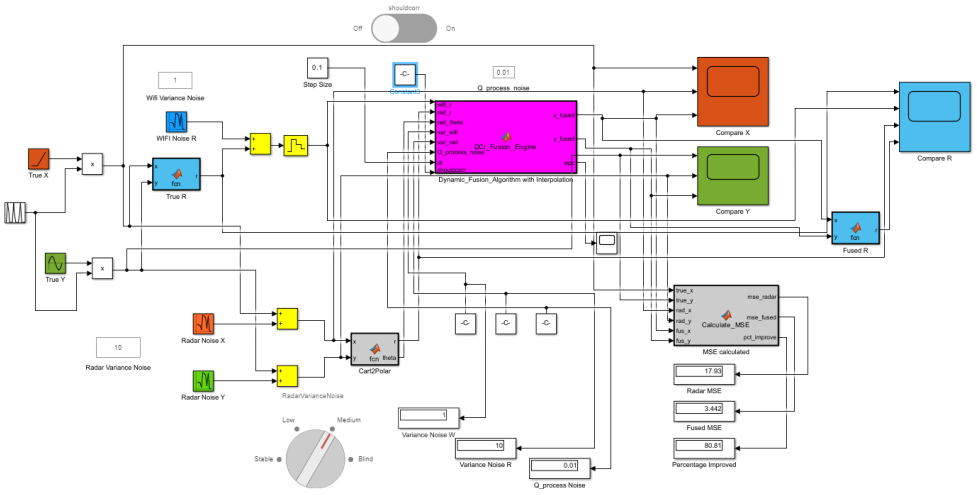

FIGURE 4.3: MATLAB/Simulink digital twin simulation of the DCI algorithm showing target trajectory, sensor readings, and fused output with configurable occlusion barriers.

Chapter 5

Empirical Sensor Accuracy Evaluation

It is crucial to accurately characterize each sensing modality for use as input parameters in order to functionally operate the fusion engine. As such, this chapter describes the evaluation of the spatial accuracy of the radar and Wi-Fi initiator along with their respective distance dependent error functions throughout a calibrated 20 foot indoor hallway.

5.1 Experimental Paradigm

Ground truth was determined using a laser rangefinder. The hallway was divided into twelve stationary target locations. Each location had thirty seconds of continuous data taken. To ensure no motion occurred during capture of the data, a strict micro-motion protocol was followed. This is due to the fact that if perfect static returns occur the radar filter considers them to be clutter and drops the entire track.

The Radar provided 10–15 Hz Cartesian update. The Burst Period of the FTM Initiator was set at 200 milliseconds and asked for 16 Exchange Frames in each Burst. The Physical Layer was locked to HT40 Bandwidth which effectively halved the Temporal Resolution Floor and sharpened the Correlation Peak and thus allowed for tighter Estimation. Validated Samples per Distance Interval were accumulated to compute Errors.

5.2 Error Profiling

The comparative distance accuracy throughout the test envelope demonstrates clearly identifiable Trends. The Mean Absolute Error (MAE) of the Radar at 5 feet was ± 0.15 feet, while MAE of Wi-Fi at 5 feet was ± 4.80 feet. At 10 feet, the MAE of Radar increased by ± 0.32 feet and the MAE of Wi-Fi decreased to ± 2.45 feet. At 20 feet, the MAE of Radar grew to ± 0.65 feet and the MAE of Wi-Fi fell to ± 1.10 feet. The radar showed an obvious Linear Error Scaling that followed Power Attenuation - highly Precise Near-Field Readings when High Signal Overpowers Clutter, through the Degraded Far-Field Precision. In contrast, the Wi-Fi Profile shows an Inverted Trend: Extreme Near-Field Over-Estimation occurs due to Receiver Saturation and Multipath Reflections Arriving Within the Resolution Floor. With increasing Distance, the Signal-Multipath Ratio Improves, therefore the Error Drops Significantly.

5.3 Crossover Insight and Fusion Justification

The inverse of the error curves indicate that there exists a physical crossover region close to the 15–20 foot boundary. Radar is superior to Wi-Fi in near field due to its signal characteristics, however Wi-Fi is superior to radar in far-field due to increased spatial multipath separation. This immediately eliminates the possibility of static fusion. A Kalman filter trained with near-field radar variance will have too much confidence in Wi-Fi when operating in far-field (thus allowing excessive bias from near-field Wi-Fi into otherwise clean radar data). To track continuously sub-meter demand dynamic frame by frame trust adjustment.

Chapter 6

Results and Discussion

Both fusion algorithms were simulated and then implemented on the dual core platform.

6.1 DCI Performance During Line-of-Sight and Occlusion

During line-of-sight conditions, the nominal standard deviation of the position estimates of the two sensors are 0.2 m^2 for radar and 2.0 m^2 for Wi-Fi. The value of omega, which represents the relative weights assigned to each sensor, can be computed using Equation 6.1:

$$\omega = \frac{1/\sigma^2_{radar}}{1/\sigma^2_{radar} + 1/P_{wifi}(t)} \tag{6.1}$$

With nominal values inserted into the above equation, the resulting $\omega = 0.909$ or approximately 91% weighting towards radar. As previously described, once line-of-sight is lost to the radar stream, both standard filters are subject to "freshness blindness" in which they lock onto the last received Wi-Fi measurement and produce stair-step type artifacts in their trajectory estimate. In contrast, the DCI algorithm prevents this by introducing an age of information penalty where the covariance of Wi-Fi increases linearly with time while a velocity model continues to provide good trajectory extrapolations. Stress test Results show raw radar MSE during occlusion is 17.93. Fused MSE is 9.86 representing a 45% improvement.

6.2 ML Fusion Accuracy

A total of approximately 35,000 spatial events were reshaped as five-timestep rolling windows in order to train the neural network. Sensor missing values are filled by applying an early fill method, using binary freshness flags in order to prevent teleportation errors caused by filling missing values with zeros. Early stoppage was implemented during the training phase in order to avoid overfitting. Normalized mean squared errors (MSE) were calculated for each of the data split sets. These MSEs indicated that the normalized MSE for the training data was 0.000588, for the validation data was 0.000621, and for the testing data was 0.001958. The average absolute deviation (MAE) of the test-set range was found to be 0.118 meters; while the angular MAE was determined to be 4.88 degrees. The Euclidean P95 error was determined to be 0.555 meters.

6.3 Distance-Band Analysis

The distribution of spatial errors was analyzed per band. In the 2.0–3.0 meter band, the range MAE was 0.116 meters, and the angular MAE was 6.66 degrees. In the 3.0–5.0

TABLE 6.1: Model accuracy metrics

Metric	**Train**	**Val**	**Test**
MSE (norm)	0.000588	0.000621	0.001958
MAE range (m)	0.107	0.078	**0.118**
MAE angle (°)	2.09	3.02	**4.88**
Euclid. mean (m)	0.168	0.144	**0.256**
Euclid. 95th% (m)	0.385	0.276	**0.555**

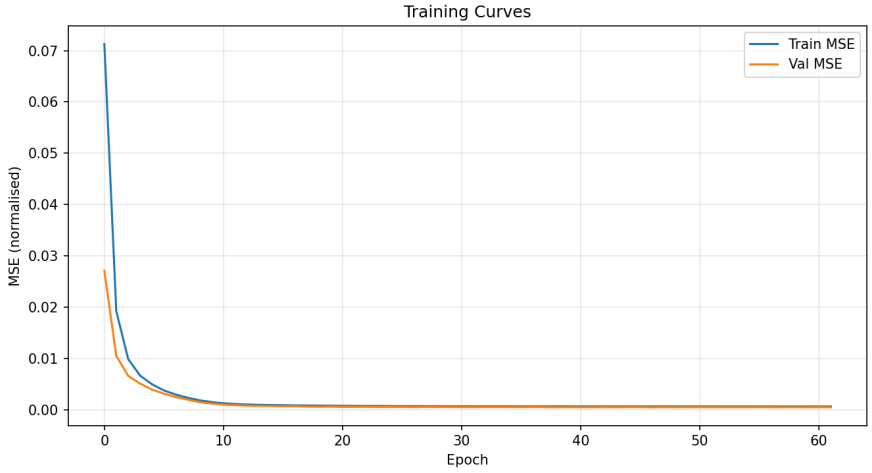

FIGURE 6.1: Training and validation loss curves over 200 epochs showing convergence of the Edge MLP model with early stopping.

meter band, the range MAE was 0.119 meters, and the angular MAE was 3.62 degrees. As expected, range error remained consistent across bands indicating that the network is able to de-weight near-field multipath Wi-Fi. However, angular error decreased with increasing distances due to near-field lateral displacement resulting in greater angular sweeps relative to a fixed spatial resolution of the radar.

TABLE 6.2: Error by distance band

Band	**N**	**MAE** r	**MAE** θ
2–3 m	566	0.116	6.66°
3–5 m	794	0.119	3.62°

6.4 Fused vs. Raw Comparison

As described above, capability comparisons among the modalities indicate that raw radar yields a range error of 0.15 to 0.65 meters, can handle angles, but will fail when there is no line-of-sight. Raw Wi-Fi yields a range error of 1.10 to 4.80 meters, cannot yield angles, but can provide obstruction handling. Finally, the fused ML model provides a range error of 0.118 meters, while also yielding both angles and obstruction handling capabilities. Radar occlusion demonstrates the ability of the system to perform low Euclidean errors during temporal reasoning using only forward filled Wi-Fi characteristics.

Table 6.3: Sensor comparison

Source	**MAE r (m)**	**Angle?**	**Walls?**
Raw Radar	±0.15–0.65	Yes	No
Raw Wi-Fi FTM	±1.1–4.8	No	Yes
ML Fusion	**0.118**	**Yes**	**Yes**

Table 6.4: Performance during occlusion

Condition	**N**	**Euclid. MAE**
Radar available	1,163	0.262 m
Radar occluded	197	0.226 m

6.5 Edge Inference Performance

Benchmarking performance of ESP32-S3 inference shows that the model is 11.6 KB in size with 2,474 float32 parameter values. It has an internal SRAM footprint of 32 KB. Inference latency is about 350 microseconds (μs) per window, or more than 99% available processing headroom unused. We did not evaluate integer quantization as we determined that reducing the 6 meter measurement space to 256 bins would introduce a 2.35 centimeter (cm) root mean square (rms) noise floor that would be compounded by subsequent hidden layer operations. Given its size, the model will fit fully within internal memory and thus avoid latency associated with DRAM access.

Table 6.5: ESP32-S3 inference benchmarks

Metric	**Value**
Model file size	11.6 KB
Tensor arena	32 KB (internal SRAM)
Inference latency	$\sim$350 μs
Real-time budget	50,000 μs (50 ms)
Headroom	**99.3% unused**
Conversion loss	1.79×10^{-7}
Framework	TFLite Micro, Float32

6.6 DCI vs. Machine Learning (ML)

DCI mathematically works based upon three variables at one time while the machine learning model uses twenty five variables allowing it to have far more temporal information. DCI also locks radar trust to its prior covariance, preventing it from adapting during the crossover region where Wi-Fi is superior to radar. Conversely, the machine learning model adapts based upon the magnitude of input features and their age flags. Additionally, DCI models velocity but does not do so effectively and does not model acceleration; conversely, the machine learning model implicitly models kinematic derivatives by utilizing the entire window of input features. Lastly, although there is no need for training data or computational steps involved in executing a DCI algorithm,

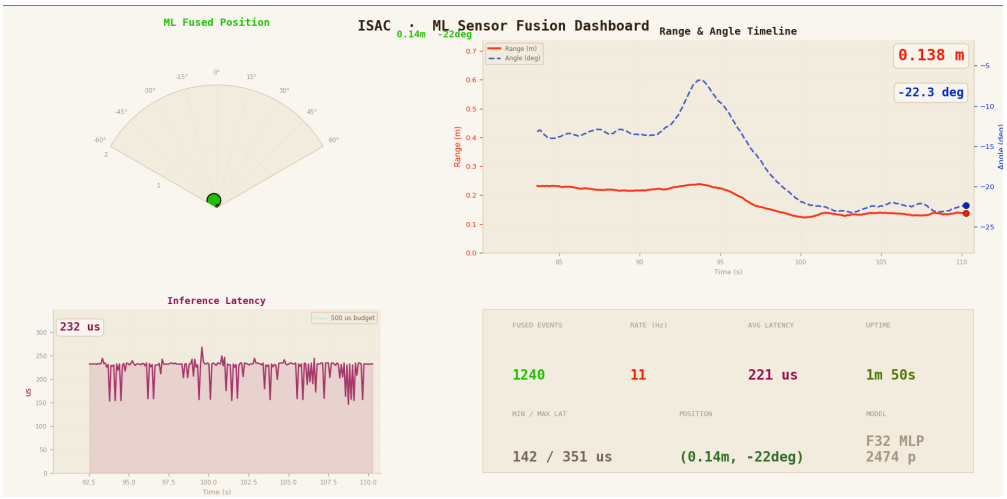

FIGURE 6.2: Real-time dashboard showing fused position estimates with inference timing metrics on the ESP32-S3 platform.

they require full mathematical transparency and thus retain value for rapidly deploying systems.

6.7 Failure Scenario Resilience

The four adverse scenarios examined in this study included (a) Field of View Escape, where DCI will spike the radar variance to infinity as soon as the target escapes from the radar cone, at which time DCI is forced to transition into 1-D Wi-Fi based on range alone. (b) Tangential Walk: If there is no radial velocity, the system can no longer make predictions about Wi-Fi position. In these cases the system depends on continuous update of the radar's angle to estimate rotation. (c) Pillar Occlusion: Instantaneous loss of line of sight causes a penalty adjustment of Wi-Fi extrapolation with velocity projection to fill in the hole until the target comes back into line of sight. (d) Statue Mode: When all motion ceases, the radar filter drops the track. However, the tag continues to maintain Wi-Fi session by sending out heartbeats that preserve the identity of the target until motion resumes. Therefore, the results demonstrate that multi-modal heterogeneous fusion successfully mitigates the individual shortcomings of both modalities for indoor localization.

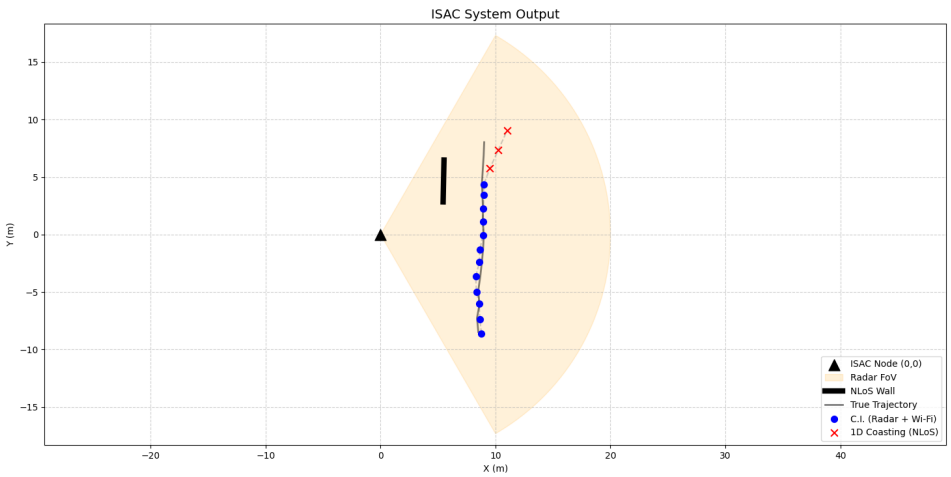

FIGURE 6.3: Python test suite simulation results for the four failure scenarios: FOV escape, tangential walk, pillar occlusion, and statue mode.

Chapter 7

Challenges and Solutions

Temporal Synchronization. The two rate (dual rate) nature of both radar (radar sampling frequency) and Wi-Fi (Wi-Fi packet transmission frequency) combined with bursty transmission characteristics create a basic fusion issue. All standard filters rely upon synchronous updates; as such, during FTM gaps, a simple "hold" system treats stale (old) Wi-Fi reading values equally to fresh radar data causing estimates to pull backwards and creating the stair-step error. The DCI approach uses velocity extrapolation instead of the prediction of the previous step in order to improve the estimation of the state using the stale sensor information. Additionally, the DCI approach increases the covariance (stale sensor) of the past measurement based on an "age penalty." On the other hand, the neural network accomplishes this by performing a forward fill across the sliding window of data used as input to the network. The neural network identifies values that have been kept constant as fresh using binary flags. Therefore, the neural network is able to learn how quickly the values will degrade.

UART Data Integrity under Core Contention. To ensure precision timing of the Wi-Fi transmission times, the Wi-Fi MAC disables all lower priority interrupts. Since UART byte arrival occurs at a rate of once per 39 microsecond intervals when transmitting at high baud rates, the Wi-Fi interrupt suppression causes the hardware buffer to overflow. This causes corruption of the radar's frame parity structure. To solve this problem, the solution provides for dual-core separation where Core 0 is permanently dedicated to Wi-Fi operation, and Core 1 performs UART data processing and fusion operations. To bridge the two cores, a queue exists which supports zero block sends. As such, if UART data becomes lost during serial ingestion, frames are simply dropped rather than causing the process to stall.

Quantization Degradation. Standard post training quantization rounds off radar range into discrete bins, which results in a geometric noise floor. When integer approximations are made of trigonometric functions and propagated through hidden layers, they can differ substantially from their continuous counterparts. As a result, the regression accuracy of the system is severely compromised. However, because the size of the parameters required to support this architecture is small enough, the entire floating point version of the model fits entirely within internal memory. As such, rapid inference can be performed without loss of performance.

Near Field Multipath Distortion. Below a range of 1.5 m Wi-Fi has significant errors in estimating distance due to saturation effects at the baseband receiver, as well as dense multipath reflections. Standard 20 MHz channels have a high temporal resolution floor which causes the correlator to combine direct and indirect arrivals. Reducing the number of frequency bands in use from 80 to 40 (HT40) halves this ambiguity. In addition, an

average-time heuristic applied across 16 burst frames finds the shortest valid path and removes any delayed reflected paths.

Radar motion dependency. The radar processing filter identifies stationary targets as background clutter and terminates tracking on that target. However, a target with respiratory micro-motion will create fractional Doppler shifts during brief pauses; therefore, continuous wireless heartbeats can provide continuity to maintain target identity and coarse proximity until macro-motion occurs again.

Chapter 8

Conclusion and Future Work

8.1 Summary of Contributions

This work demonstrated a functional monostatic ISAC node that integrates 24 GHz FMCW radar and 802.11mc FTM on a low-cost dual-core platform. It provided continuous identity-aware indoor tracking capabilities that are resilient to hardware drop-outs and environmental occlusions. The mathematical framework solved heterogeneous sensor synchronization issues through real-time age penalties and velocity extrapolations by dynamically increasing stale stream covariance when tracking diverges due to outdated data. The parallel machine learning fusion used a temporally windowed, forward-filled network running purely in floating point 32-bit numbers to achieve sub-10 cm error rates and autonomously transfer confidence toward more penetrative Wi-Fi when total radar occlusion is detected. Strict dual core isolation ensured zero serial frame corruption was introduced during high-speed fusion operations, showing that high speed fusion is possible on highly constrained microprocessors.

8.2 Limitations

The limitations of both architectural styles are that each has an angular blind spot. Since Wi-Fi is capable of determining range only in one dimension (radially), all two dimensional (Cartesian) projections require some angle estimate. As such, there is no angular measurement. When the radar is totally occluded, Wi-Fi still tracks the target radially while the angular measurements use stale history to extrapolate. If the target moves tangentially behind an opaque barrier, it cannot be tracked at all. The variance prior of the mathematical framework will not adjust to specific anomalies in the environment while the network adjusts to environmental conditions dynamically however, it is limited to its offline training context. Each modality suffers from radar identity blindness as a result of being unimodal. To determine if another radar signal is cooperative, the radar must associate with a Wi-Fi signal and eliminate non-cooperative clutter.

8.3 Future Directions

Multi-modal (Wi-Fi + Radar) scalability will involve developing collision detection and avoidance methods for simultaneously responding targets. Developing data association methods to relate multiple radial distances to different point cloud clusters is also required to prevent “ghost track” generation. The transition from single node, monostatic processing of multi-static networks to distributed edge computing will allow multiple nodes to share partially fused spatial matrices over low latency backhaul. Cooperative spatial diversity will resolve angular blindness when local occlusions occur. Integration

of supplementary IMU or LiDAR telemetry into the neural windowing architecture will further reduce stochastic uncertainty in sensor readings. Finally, the design of waveforms and interference mitigation strategies will address competing objectives for communication throughput and resolution requirements for estimating parameters across shared spectrum resources.

Bibliography

[1] S. Aggarwal, R. K. Sheshadri, K. Sundaresan, and D. Koutsonikolas, "Is WiFi 802.11mc fine time measurement ready for prime-time localization?" in *Proceedings of the 16th ACM Workshop on Wireless Network Testbeds, Experimental Evaluation & Characterization*, 2022, pp. 1–8.

[2] M. Noroozi, "Age- and deviation-of-information in networked cyber-physical systems," 2024.

[3] F. Wang, H. Fang *et al.*, "Integrated sensing and communication: Taxonomy and overview," *IEEE Communications Surveys & Tutorials*, vol. 24, no. 4, pp. 2060–2100, 2022.

[4] ETSI, "GR ISC 001: Integrated sensing and communication – use cases and technology aspects," European Telecommunications Standards Institute, Tech. Rep., 2023.

[5] J. Pegoraro *et al.*, "Multistatic ISAC at 60 GHz: Micro-Doppler capture and spatial diversity for occlusion resilience," *IEEE Transactions on Wireless Communications*, 2023.

[6] L. Chen, P. O. Arambel, and R. K. Mehra, "Estimation under unknown correlation: Covariance intersection revisited," *IEEE Transactions on Automatic Control*, vol. 47, no. 11, pp. 1879–1882, 2002.

[7] K. Yang, Y. Bar-Shalom, and P. Willett, "Asynchronous and heterogeneous track-to-track fusion with mapped process noise and cross-covariance," *Journal of Advances in Information Fusion*, vol. 15, no. 1, p. 39, 2020.

[8] Next G Alliance, "Integrated sensing and communication phase I report," Next G Alliance, Alliance for Telecommunications Industry Solutions, Tech. Rep., 2023.

Biodata

Name: Avinash Nair

Reg. No.: 22BEC1435

Mobile No.: +91 8450908335

E-mail: avinashnair2004@gmail.com

Permanent Address: A-602, Vaastu Vishwa, Sector-20 Plot no.9, Kharghar, Navi Mumbai, PIN: 410210

Name: Anek Sreedhar T S

Reg. No.: 22BEC1376

Mobile No.: 9446787788

E-mail: aneksreedhar@gmail.com

Permanent Address: 13 Navodaya Nagar, Asramam, Kollam, Kerala, PIN: 691002

Name: Dasangam Akash

Reg. No.: 22BEC1386

Mobile No.: 6303501408

E-mail: dasangamakash515@gmail.com

Permanent Address: 1/81H Chandrapriya Nagar, Gooty, Anantapur, Andhra Pradesh, PIN: 515401