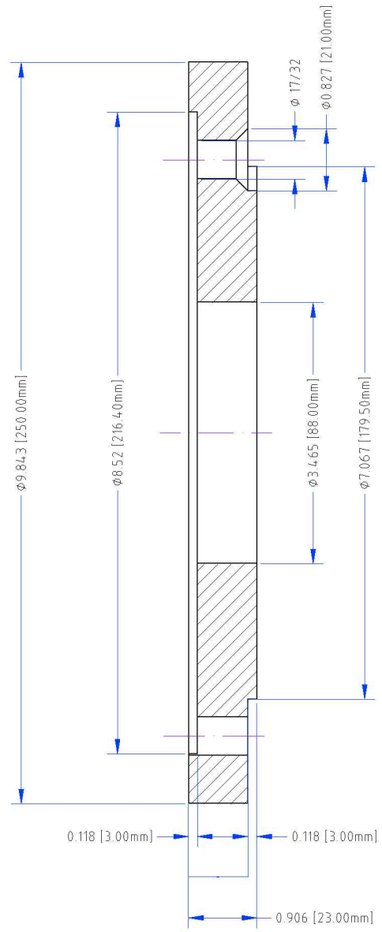


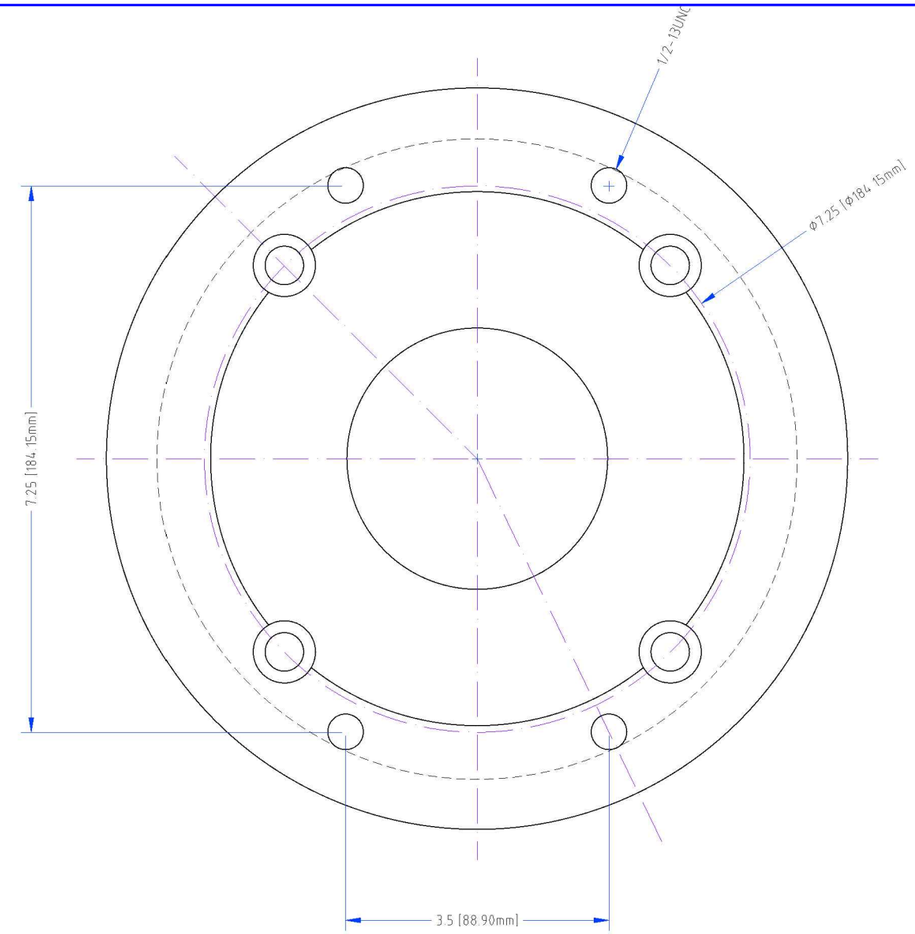


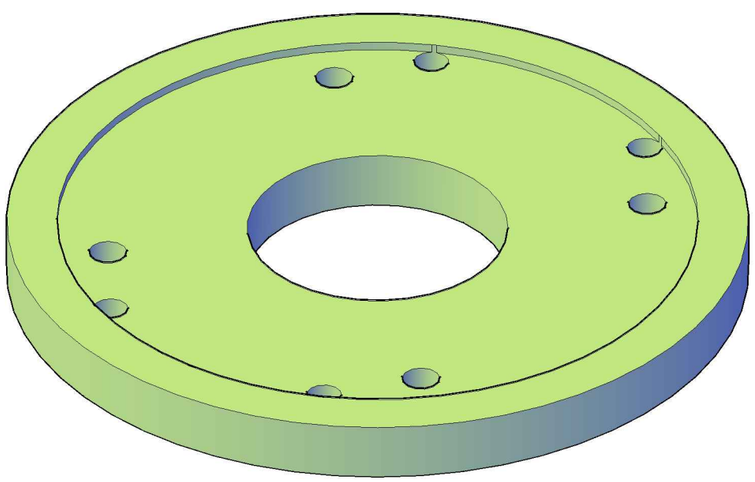

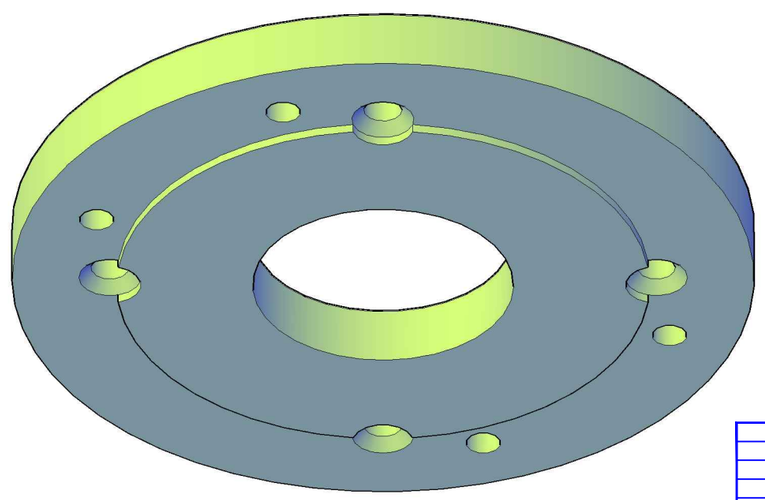

THIS DRAWING INCLUDING THE DESIGN AND PRINCIPLES OF CONSTRUCTION DISCLOSED IS THE PROPERTY OF VISCOTEC INC. AND IS SUBMITTED WITH THE UNDERSTANDING THAT IT IS NOT TO BE REPRODUCED NOR COPIED IN WHOLE OR IN PART NOR LOANED OR OTHERWISE COMMUNICATED TO ANY THIRD PARTY NOR USED IN ANY MANNER DETRIMENTAL TO THE INTERESTS OF VISCOTEC INC., WITHOUT ITS EXPRESS CONSENT. ACCEPTANCE OF THIS DRAWING WILL BE CONSTRUED AS AN AGREEMENT TO THE ABOVE.

ViscoTec
innovative processing equipment
P.O. Box 4003
Visalia, CA 93278
Phone: (559) 429 4227
Fax: (559) 429 4228
www.viscotec.com

| PROJECT NO | LVL | REVISION DESCRIPTION | BY | DATE |
|---|---|---|---|---|
| | A | | cb | 28.Jan.2015 |

| DRAWN DATE | DRAWN BY | CHECKED BY | APPD BY |
|---|---|---|---|
| 16.Oct. 2014 | Chr. Beuchat | | |

| MATERIAL | FACILITY | NEXT ASSEMBLY | SCALE | CAD NUMBER |
|---|---|---|---|---|
| | | | | |

CUSTOMER: Visco Tec

PROJECT TITLE:

DRAWING TITLE: Flange VT70/M112_184-215TC

PAPER SIZE:

| PROJECT NO. | PART NUMBER | DRAWING NUMBER | REV. LVL |
|---|---|---|---|
| | | | A |

1 1

FILE: P:\Shared\VISCOTEC\AUTOCAD_DWG\PRODUCT_DWG\ViscoTwin\ViscoTwin 70\Connection Flanges\VT70_M112_182-215TC.dxf
PRINTDATE: 2015-1-28, 11:39 am - BY: Andreas