ACHTUNG !!!

Bei Rührwerksantrieben mit Frequenz-Umformerbetrieb oder mechanischen Verstellgetrieben unbedingt Hinweis in Betriebsanweisung - Register 4 - über zulässigen Regelbereich beachten.

ATTENTION !!!

For agitator drives with a frequency converter mode or for mechanical variable-speed gears, the information given in the Operating Instructions – Register 4 – on the permissible control range must be observed unconditionally.

ATTENTION !!!

Pour les agitateurs entraînés par moteur avec convertisseur de fréquence ou mécanismes ajustables, respecter impérativement la plage de réglage admissible, mentionnée au chapitre – Registre 4 – du manuel d'utilisation.

ATTENZIONE!

Per i gruppi di movimento con convertitore di frequenza o variatori meccanici, rispettare assolutamente l'indicazione nelle istruzioni per l'uso (sezione 4) sul campo di regolazione consentito.

¡ATENCIÓN!

En mezcladores con accionamiento regulado mediante convertidor de frecuencia o variador mecánico de velocidad deben observarse las instrucciones de servicio (pestaña 4) sobre el margen de regulación permitido.

D BEDIENUNGSANLEITUNG
GB OPERATING INSTRUCTIONS
F INSTRUCTIONS DE SERVICE
I ISTRUZIONI D'USO
E MANUAL DE INSTRUCCIONES

VISCO JET®
Rührsysteme GmbH

D	Rührwerk Typ	
GB	Agitator type	VJ600.080G
F	Type d'agitateur	
I	Modello miscelatore	
E	Mezclador tipo	
D	Kunde	
GB	Customer	PROCESSTEC Inc.
F	Client	P.O. box: PO Box 4003
I	Cliente	CA93278 VISALIA
E	Cliente	USA
D	Kunden Bestellnummer	
GB	Customer purchase order no	PO11155-EC-270-AD
F	Client Numéro de commande	
I	N° ordinazione cliente	
E	Nº de pedido de cliente	
D	Kunden Position	
GB	Customer position	10 + 15
F	Client position	
I	Posizione cliente	
E	Posición de cliente	
D	VISCO JET Auftrag Nr.	
GB	VISCO JET order no.	VA00000674
F	N° de commande VISCO JET	
I	N° ordine VISCO JET	
E	Nº de pedido de VISCO JET	
D	VISCO JET Artikel Nr.	
GB	VISCO JET article no.	10039546 + 10038216
F	Réf. d'article VISCO JET	
I	N° articolo VISCO JET	
E	Nº de artículo de VISCO JET	
D	VISCO JET Serien Nr.	
GB	VISCO JET serial no.	12222
F	N° de série VISCO JET	
I	N° serie VISCO JET	
E	Nº de serie de VISCO JET	

Druck:
Print: 31.01.2012/ GZ

VISCO JET®
Rührsysteme GmbH

D INHALTSVERZEICHNIS
GB LIST OF CONTENTS
F SOMMAIRE
I INDICE
E CONTENIDO

1	D	Spezifikation
	GB	Specification
	F	Spécification
	I	Specifica
	E	Especificaciones
2	D	Zeichnung, Stückliste
	GB	Drawing, Part list
	F	Plan, Nomenclature
	I	Illustrazione, lista delle parti
	E	Dibujo, lista de piezas
3	D	Allgemeine Hinweise / Beschreibung der Wirkungsweise
	GB	General notes / Description of the mode of action
	F	Notices d'ordre général / Description du mode d'action
	I	Informazioni generali / Descrizione del funzionamento
	E	Indicaciones generales / Descripción del principio de funcionamiento
4	D	Betriebsanweisung / Störungen und Abhilfen / Schraubenanzugsmomente / Kräfte an der Rührwerksauflage / Wellenwechsel (optional)
	GB	Operating instructions / Failures and remedies / Tightening torques / Dynamic loads on agitator support / Changing the shaft (optional)
	F	Instructions de service / Dysfonctionnements et remèdes / Couples de serrage des vis / Des forces à l'édition d'agitateur / Remplacement de l'arbre (optional)
	I	Istruzioni d'uso / Anomalie e rimedi / Coppia di serraggio di viti / Forza nell'appoggioa agitatore / Supplemento sostituzione della frusta (optional)
	E	Instrucciones de servicio / Fallos y soluciones / Pares de apriete de tornillos / Fuerzas al soporte del agitator / Hoja anexa Cambio del árbol (optional)
5	D	Unterlagen Rührwerksantrieb
	GB	Instructions agitator drive
	F	Instructions entrainemet de l'agitateur
	I	Documentazione comando del miscelatore
	E	Documentación Accionamiento del mezclador
	D	Schmierstoff siehe Typenschild
	GB	Lubrication see type plate
	F	lubrifiant voir plaque repère
	I	Lubrificante vedere targhetta
	E	Lubricante ver placa de características
6	D	Einbau-Erklärung
	GB	Assembly declaration
	F	Déclaration de montage
	I	Dichiarazione di montaggio
	E	Declaración de montaje
7	D	Unterlagen Gleitringdichtung Typ Chesterton
	GB	Documents mechanical seal type Chesterton

Trendsetting agitator systems

VISCO JET®
Rührsysteme GmbH

RÜHRWERK SPEZIFIKATION / *AGITATOR SPECIFICATION* / AGITATEUR SPÉCIFICATION

Customer : **Processtec** **23.01.2012/SM**
Specification no.: **VA00000674**

Agitator type: **VJ600.080G**
Mixing Task:

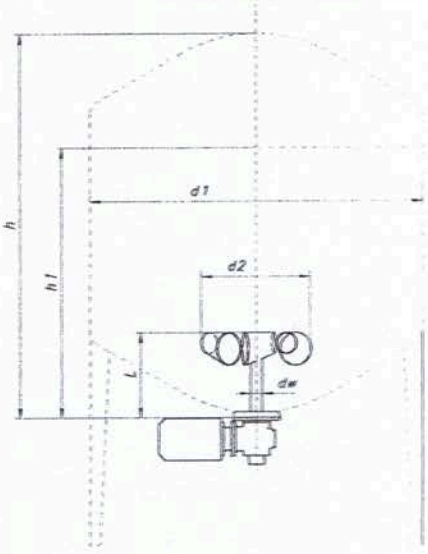

Product data :	Medium		
	Density	1000	Kg/m³
	Viscosity	10000	mPas
	Solids concentration		Gew-%
	Operating temperature		°C
	Operation compression		bar, abs
Vessel data :	Nominal volume		m³
	Diameter (*d 1*)	3454	mm
	Height vesselbottom to Agitatior top (*h*)	4395	mm
	Filling height (*h1*)		mm

Agitator operation: The agitator is designed for steping operation,
but may not be operated constantly with the liquid mirror at the impeller height.
The liquid level should cover the impeller level during the filling and the emptying rapidly.

Drive:

Type: Bevel-geared-motor Nord, prepared for frequency-converter, steam secured isolation

Power:	7,5 KW	Voltage:	460 Volt	Frequency:	60 Hz
Output speed:	55 min^{-1}	Protectionclass:	IP 55	Ex-Protection:	-
Form :	M6	Protective roof :	-	Thermal classification : F	
Montage (outdoor/indoor): -				Ambient temperature °C	

Agitatior:

Fastening :

Seal : Double acting mechanical seal, Chesterton, FDA

Mounting: Lantern for welding at the bottom

Shaft : Length Lw = 1560 mm, diameter dw = 80 mm,
Construction : insertion shaft, with plates for hauling

Impeller : Type VISCO JET® triple / diameter d_2 = 1500 mm, with O-Ring

Material : Product wetted parts stainless steel no. V4A 1.4571, grinded corn 180

Varnishing : RAL 9010 , white

Installation : Centric from below

Total weight of the agitator : 394 kg

General note : Provided that no exact data regarding product or container were transmitted to us, we have assumed data cited above.

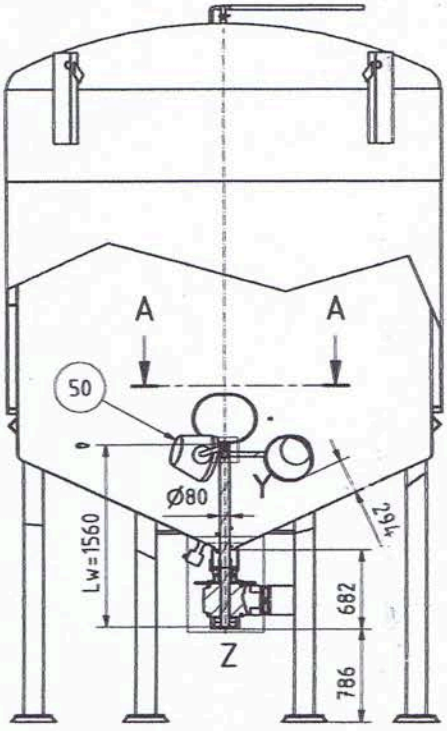

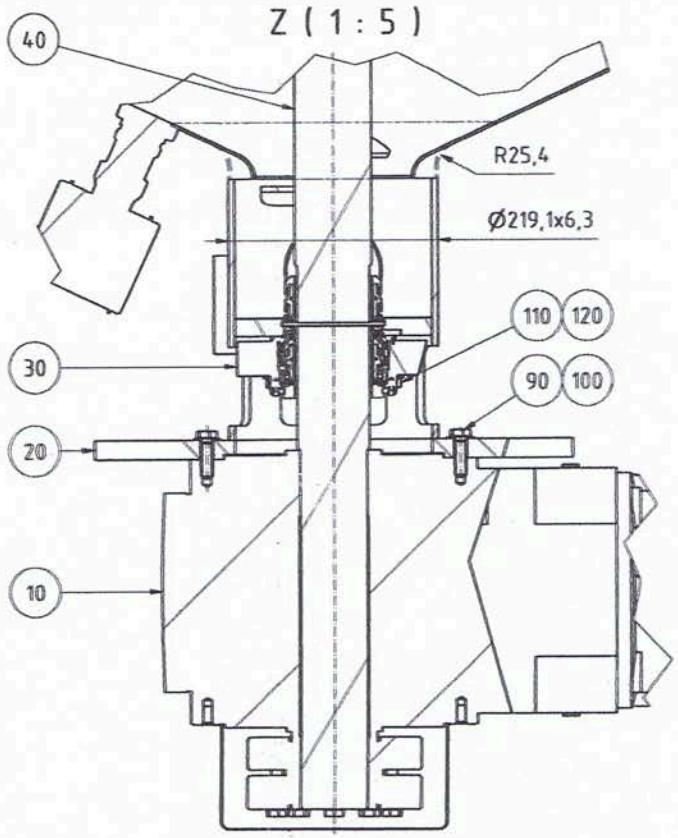

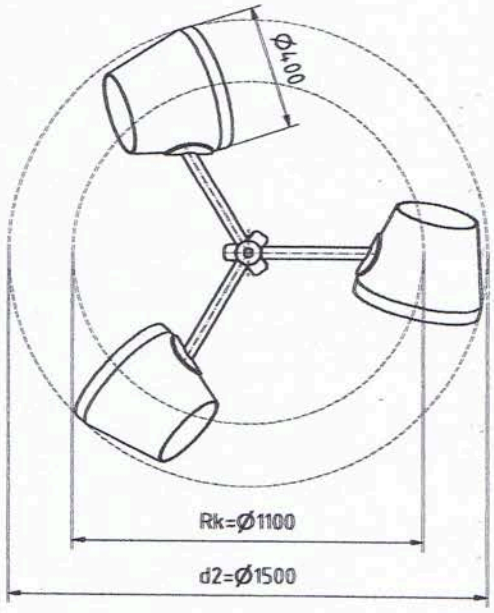

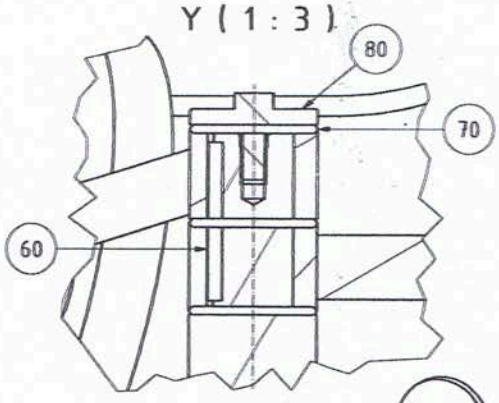

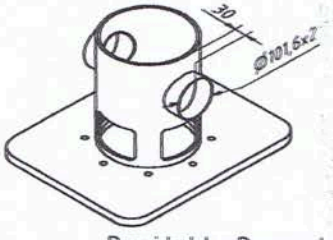

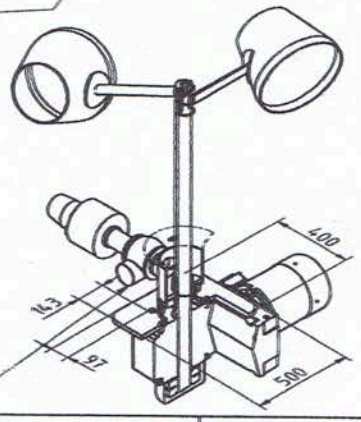

Provided by Processtec
Welded by VISCO JET

Für diese Unterlage behalten wir uns alle Rechte, auch für den Fall der Patentertheilung und der Eintragung eines anderen gewerblichen Schutzrechtes vor. Mißbräuchliche Verwendung, wie insbesondere Vervielfältigung und Weitergabe an Dritte ist nicht gestattet; sie kann zivil- und strafrechtlich geahndet werden.

Status	Änderungen	Datum	Name

Kunde: Processtec Inc.
AB.-Nr.: VA00000674

	Datum	Name
Gezeichnet	07.10.2011	Maliske
Kontrolliert		
Norm		

VISCO JET Rührsysteme GmbH
Tel.: 07741 96567-0
Fax: 07741 96567-15
info@viscojet.com
www.viscojet.com

Maßstab: 1:40	Gewicht: 532,077 kg
Werkstoff:	Farbe:
Artikel Nr.: 10039546	

Bottom-entry-Agitator

Type VJ600.080G

60000013

Blatt1 /2

A3

60000013.idw

Änd.-Index

Bill of material - documentation

VISCO JET®
Rührsysteme GmbH

ITEM: **60000013**
Bottom-entry agitator type VJ600.080G 7,5 kW, na=55 rpm, 460 V, 60 Hz, mechanical seal, VJ1500, O-ring, grinded corn 180

created: S. Maliske
printed: 07.10.2011

Pos.	Art. no.	Drawing no.	Description	Variable quantity
10		SK9052.1AZSH-132M_4 TF_7,5_55	Bevel geared motor type Nord, 7,5kW, 55 rpm, 460V, steam secured isolation, lacquered according to sales order	1
20	10039543	L2200006	Lantern d=219,6 L=290, 1.4571, LK=160/265, centering 105/230, grinded corn 180	1
30	10039413	Chesterton S20 dw=75	Chesterton mechanical seal S20 dw=75	1
40	10039541	W8000047	Agitator shaft d=80 LW=1560, 1.4571 for hollow shaft d=70x380, connection d=50x118, for mechanical seal, grinded corn180	1
50	10039545	VJ150029	VISCO JET® 3-fold d2=1500, 1.4571, hub d=50/80x120, split version, O ring, grinded corn 180	1
60		DIN 6885 - A 14 x 9 x 100	Parallel key DIN 6885 - A 14 x 9 x 100, 1.4571	1
70		10004406	O-ring 72,62 x 3,53 OR4287/EPDM, according to FDA regulations	3
80		VJA16013	End screw M16 d=80 without locking area, 1.4571	1
90		DIN 933 - M12 x 40	Hexagonal socket-headed screw DIN 933 - M12 x 40, 1.4571	7
100		Sperrkantscheibe SKM für M12	Retaining washer form M for M12, 1.4571	7
110		DIN 933 - M16 x 55	Hexagonal socket-headed screw DIN 933 - M16 x 55, 1.4571	4
120		Sperrkantscheibe SK-M-M16	Retaining washer, form M, M16, 1.4571	4
130		Aufkleber VJ600	Sticker "VISCO JET VJ 600" 220x50mm	1
140	10021176	Drehrichtungspfeil	Rotation arrowhead 14x56	1
150	10021041	Aufkleber kritische Drehzahl	Sticker "Critical rotation speed"	1

D ALLGEMEINE HINWEISE
GB GENERAL NOTES
F REMARQUES.D'ORDRE GENERAL
I INFORMAZIONI GENERALI
E INDICACIONES GENERALES

D Bestimmungsgemäßer Gebrauch
GB Designated use
F Utilisation conforme
I Uso secondo le norme
E Uso adecuado

D

Das Rührwerk darf nur für den eigens dafür hergestellten Zweck verwendet werden.
Den genauen Einsatz des Rührwerkes entnehmen Sie der Spezifikation.
An dem Rührwerk darf mechanisch und elektrisch nichts verändert werden.

GB

The agitator may only be used for its purpose.
You take exact use of the agitator from the specification.
Nothing may be changed mechanically and electrically at the agitator.

F

L'agitateur ne doit être utilisé que pour l'application pour laquelle il est conçu.
Vous voudrez bien prendre connaissance de l'utilisation adéquate de l'agitateur dans la Spécification.
L'agitateur ne doit subir aucune modification mécanique ni électrique.

I

Il miscelatore deve essere utilizzato solo per lo scopo appositamente stabilito a tal proposito. Dalla specifica è possibile apprendere l'esatto impiego del miscelatore. È vietato apportare modifiche al miscelatore di tipo meccanico ed elettrico.

E

El mezclador sólo se puede utilizar con los fines para los que está construido.
Para la descripción exacta de la aplicación del mezclador, consulte las especificaciones.
No se pueden realizar modificaciones mecánicas ni eléctricas en el mezclador.

D ALLGEMEINE HINWEISE
GB GENERAL NOTES
F REMARQUES.D'ORDRE GENERAL
I INFORMAZIONI GENERALI
E INDICACIONES GENERALES

VISCO JET®
Rührsysteme GmbH

D / GB / F Transport
I Trasporto
E Transporte

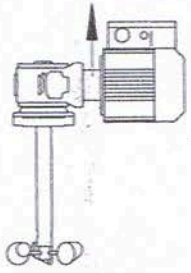

D

Zusammengebautes Rührwerk zum Transport nicht an Wellenende und Antrieb gleichzeitig aufnehmen, sondern nur am Antrieb.
Die Welle könnte sonst verbogen werden. Anschlagmittel am Antrieb sicher befestigen.

GB

Do not raise the complete agitator by the drive and shaft-end simoultaneously, only by drive. Perhaps the shaft will be bent.
Please fasten the stop means at the drive safely.

F

Pour transporter l'agitateur assemblé, ne pas le prendre en même temps par l'extrémité de l'arbre et par la commande mais seulement par la commande. Sinon, l'arbre pourrait être tordu. Bien fixer le matériel d'élingage sur la commande

I

Ai fini del trasporto, il miscelatore montato non deve essere sollevato contemporaneamente dall'estremità della frusta e dal complesso motore, bensì solamente dal complesso motore, altrimenti la frusta potrebbe piegarsi. Fissare saldamente l'imbracatura al complesso motore.

E

Para transportar el mezclador montado, no elevarlo al mismo tiempo por el extremo del árbol y el accionamiento, sino únicamente por el accionamiento. De lo contrario, el árbol podría deformarse.
Fijar los elementos de enganche de forma segura en el accionamiento.

VISCO JET®
Rührsysteme GmbH

D ALLGEMEINE HINWEISE
GB GENERAL NOTES
F REMARQUES.D'ORDRE GENERAL
I INFORMAZIONI GENERALI
E INDICACIONES GENERALES

D Wichtige Sicherheits- und Warnhinweise !
GB Important safety and warning notes !
F Consignes importantes de sécurité et d'avertissement !
I Informazioni importanti di avvertimento e per la sicurezza !
E Avisos de seguridad y advertencia importantes !

D **Gefahr durch Strom**
Siehe Betriebsanleitung Motor und Getriebe
GB **Danger by current**
See Operating Instructions Motor and Gear Units
F **Risques dus au courant électrique**
Instructions de service du moteur et du réducteur
I **Pericolo di corrente**
Vedere istruzioni d'uso per motore e trasmissione
E **Peligro por tensión eléctrica**
Ver manual de instrucciones motor y transmisión

D **Achtung**
Rotierende Teile
GB **Attention**
Rotating parts
F **Attention.**
Pièces en rotation
I **Attenzione**
Danni possibili al miscelatore
E **Atención**
Elementos rotatorios

D **Achtung**
Mögliche Beschädigung des Rührwerks
GB **Attention**
The agitator might get damaged
F **Attention**
Dommage possible de l'agitateur.
I **Attenzione**
Parti rotanti
E **Atención**
Peligro de dañar el mezclador

D ALLGEMEINE HINWEISE
GB GENERAL NOTES
F REMARQUES.D'ORDRE GENERAL
I INFORMAZIONI GENERALI
E INDICACIONES GENERALES

VISCO JET®
Rührsysteme GmbH

D Wichtige Gebrauchshinweise !
GB Important use notes !
F Consignes importantes d'utilisation !
I Importanti istruzioni d'uso!
E Indicaciones de uso importantes.

D **Wartung**
Siehe Wartung (Betriebsanweisung)
GB **Maintenance**
See maintenance (Business Instruction)
F **Maintenance**
Cf. Maintenance (Instructions de service)
I **Manutenzione**
Vedere manutenzione (istruzioni d'uso)
E **Mantenimiento**
Ver mantenimiento (instrucciones de servicio)

D **Schmierung**
Siehe Betriebsanweisung
GB **Lubrication**
See Business Instruction
F **Lubrification**
Cf. Instructions de service
I **Lubrificazione**
Vedere istruzioni d'uso
E **Lubricación**
Ver instrucciones de servicio

VISCO JET®
Rührsysteme GmbH

D BESCHREIBUNG DER WIRKUNGSWEISE
GB DESCRIPTION OF THE MODE OF ACTION
F DESCRIPTION DU FONCTIONNEMENT
I DESCRIZIONE DEL FUNZIONAMENTO
E DESCRIPCIÓN DEL PRINCIPIO DE FUNCIONAMIENTO

D

Bei dem VISCO JET® Rührsystem handelt es sich um das Original aus dem Hause VISCO JET, einen konusförmigen und eigendynamischen Langsamläufer.
Dieses Prinzip ermöglicht bereits bei niedrigen Umlaufgeschwindigkeiten eine effiziente Durchmischung
Die speziellen Vorteile :
- schonendes Rühren durch Konusprinzip
- niedrige Drehzahlen
- kein Lufteinzug
- keine Schaumbildung

GB

The VISCO JET® agitator system is the genuine conical, high-momentum, low-speed system of VISCO JET.
This principle already enables an efficient mixture at low circulation speeds.
the special advantages :
- gentle agitating by principle of cone
- low rotational speeds
- no air inclusion
- no foam formation

F

Le système d'agitation VISCO JET® est l'original de la maison VISCO JET et possède un rotor à régime lent, de forme conique et à dynamique propre.
Ce principe permet un mélange efficient déjà à basse vitesse de rotation.
Les avantages spéciaux :
- mélange doux grâce au principe de cône
- vitesses faibles
- pas d'inclusion d'air
- pas de formation de mousse

I

Nel caso del sistema di miscelazione VISCO JET® si tratta dell'originale della Ditta VISCO JET, un rotore lento, a forma conica, con propria dinamica.
Questo sistema rende possibile, già in caso di bassa velocità di rotazione, un'efficiente miscelazione.
I vantaggi particolari :
- miscelazione delicata grazie al sistema conico
- numero di giri ridotto
- nessuna entrata d'aria
- nessuna formazione di schiuma

E

El sistema de agitación VISCO JET® es el original de la casa VISCO JET, en forma de cono, con dinámica propia y a rotor lento.
Este principio de funcionamiento proporciona un mezclado eficaz incluso a bajas velocidades de rotación.
Las ventajas específicas son :
- mezclado cuidadoso por sistema cónico
- bajas velocidades de giro
- sin penetración de aire
- *sin formación de espuma*

D BESCHREIBUNG DER WIRKUNGSWEISE
GB DESCRIPTION OF THE MODE OF ACTION
F DESCRIPTION DU FONCTIONNEMENT
I DESCRIZIONE DEL FUNZIONAMENTO
E DESCRIPCIÓN DEL PRINCIPIO DE FUNCIONAMIENTO

VISCO JET®
Rührsysteme GmbH

D Das VISCO JET® Rührsystem gibt es in zwei Varianten: Spiralkonus / Becherkonus

Spiralkonus
Spiralcone
Cône à spirale
Cono a spirale
Cónico helicoidal

GB The VISCO JET® agitator system is available in two variants: Spiralcone / Beakercone

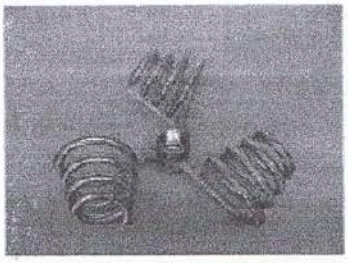

F Le système mélangeur VISCO JET® existe en deux variantes: cône spiralé / godet conique

Becherkonus
Beakercone
Godet conique
Cono a coppa
Cónico cilíndrico

I Il sistema di miscelazione VISCO JET® è disponibile in due versioni: cono a spirale / cono a coppa

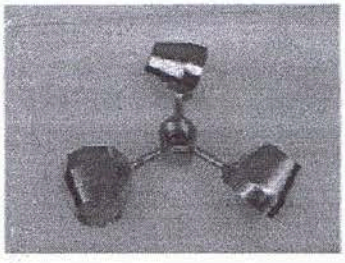

E El mezclador VISCO JET® existe en dos variantes: cónico helicoidal / cónico cilíndrico

D Die Organe unterscheiden sich nicht nur äußerlich, sondern auch durch ihre Fähigkeiten, hoch- oder niedrigviskose Stoffe zu vermischen.
Der Spiralkonus erzeugt ein ideales Mischergebnis in hochviskosem Mischgut mit Feststoffanteilen, bei dem auch Scherwirkungen und Axialkräfte auftreten.
Der Becherkonus wiederum ist für die niedrigviskosen bis mittelviskosen Mischgüter zuständig (schonendes Rühren).

GB The organs have also abilities to mix high or low viscous substances.
The spiralcone produces an ideal mixing result into high viscous mixing good with solid components, which also appear at shearing effects and axial forces.
However, the beakercone is responsible for the low viscous to average viscous mixing goods (gentle agitate).

D BESCHREIBUNG DER WIRKUNGSWEISE
GB DESCRIPTION OF THE MODE OF ACTION
F DESCRIPTION DU FONCTIONNEMENT
I DESCRIZIONE DEL FUNZIONAMENTO
E DESCRIPCIÓN DEL PRINCIPIO DE FUNCIONAMIENTO

VISCO JET®
Rührsysteme GmbH

F Les organes ne se différencient pas seulement extérieurement mais aussi par leur capacité de mélanger des substances très visqueuses ou faiblement visqueuses.
Le cône spiralé donne un résultat de mélange idéal pour un produit à mélanger très visqueux contenant des substances solides et dans lequel des cisaillements et forces axiales peuvent se présenter.
Par contre le godet conique est compétent pour les produits à mélanger peu à moyens visqueux (mélange doux)

I Gli organi si differenziano non solo per l'aspetto esterno, ma anche per la loro capacità di miscelazione di materiali dalla viscosità elevata o ridotta.
Il cono a spirale offre un ideale risultato di miscelazione per quanto riguarda i materiali misti altamente viscosi contenenti sostanze solide, nei quali si manifestano anche effetti di taglio e forze assiali.
Il cono a coppa invece è adatto per materiali misti a viscosità bassa-media (miscelazione delicata)

E Los órganos se distinguen tanto físicamente como por su capacidad de mezclado de sustancias de alta y baja viscosidad, respectivamente.
El cono helicoidal proporciona excelentes resultados en la mezcla de materiales con partículas sólidas, que implica la presencia de fuerzas axiales y cizallamientos.
El cono cilíndrico, por su parte, es la solución óptima para mezclar materiales de baja y media viscosidad (mezclado cuidadoso).

VISCO JET®
Rührsysteme GmbH

OPERATING INSTRUCTIONS VJ600.080G, Sales order no. VA00000674, Item no. 10039546, Serial no. 12222

Mounting information

Do not transport the assembled agitator by lifting the end of the shaft and the drive at the same time. Only pick it up by the drive end. Otherwise the shaft could be bent. Securely attach the lifting tackle to the drive.

For large shafts, attach the agitator to the lifting gear with the supplied eyebolt screwed onto the upper part of the shaft.

Securely screw the agitator to a stable support via the mounting flange. Check the screwed connections again before starting the agitator.

Direction of rotation

Mount the VISCOJET® so that the **large** displacement diameter is on the **right** when viewed from above.
Place the locking plate on the stop faces.

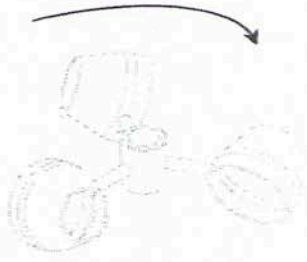

Check that the impeller is securely seated

Electrical connection

The electrical connection must be made by someone specially authorised for this work. Please refer to the operating instructions in the drive documents.

Starting up

Before switching on the agitator, ensure that there are no persons or objects within the operating range of rotating parts.

If the unit is connected to a terminal box, take account of the rotation direction of the agitator. Rotation direction of the stirring shaft looking from the drive to the agitator: clockwise

To avoid damage to the agitator, ensure that no objects can fall into the vessel.

During work on the agitator, e.g. cleaning or checking activities, always secure or block the drive electrically against being unintentionally switched on.

Mounting the shaft / Changing the shaft

Before mounting or dismounting the agitator shaft, **secure it against falling out.**
For information on mounting and dismounting the hollow drive shaft, see the operating instructions of the gearbox.

Changing the seal

For this, follow the instructions given in the **information sheet on changing the seal**
(Seal optional)

Screwed connections

During servicing or maintenance work, check that all screwed connections are tight. Retighten if necessary.
For this, please take account of the screw tightening torques given in the table.

Controlled operation **Attention !!**

Do not exceed output speed n_2 = 55 rpm to prevent the motor from overloading or because the shaft strength is insufficient.
The critical speed is approx. 740 rpm and is thus not a problem.
Caution, in idle running the agitator must not be operated with nominal rotation speed.

Shaft lock

Units with a hollow drive shaft have a stop disk or a screw to secure the agitator shaft. During inspections, approximately every three months, check that the screwed connection is tight.

D STÖRUNGEN UND ABHILFEN
GB FAILURES AND REMEDIES
F PANNES ET REMEDES
I ANOMALIE E RIMEDI
E FALLOS Y SOLUCIONES

VISCO JET®
Rührsysteme GmbH

D FEHLER GB FAULT F DEFAUT I ERRORE E FALLO	D MÖGLICHE URSACHE GB POSSIBLE CAUSE F CAUSE POSSIBLE I POSSIBILI CAUSE E POSIBLE CAUSA	D BEHEBUNG GB REMEDYING F ELIMINATION I ELIMINAZIONE E SOLUCIÓN
D Rührwerk läuft nicht GB Agitator does not run F L'agitateur ne fonctionne pas I Il miscelatore non funziona E El mezclador no gira	D Stromversorgung fehlt GB Power supply is missing F Alimentation en électricité fait défaut I Manca l'alimentazione elettrica E Sin alimentación de corriente	D Von Fachpersonal (Elektriker) überprüfen lassen GB Check has to be done by specialist staff (electrician) F Faire vérifier par du personnel spécialisé (électricien) I Far controllare da un esperto (elettricista) E Comprobación a cargo de personal especializado (electricista)
D Antrieb bewegt sich (vibriert) GB Drive moves (vibrates) F La commande remue (vibre) I Il complesso motore si muove (vibra) E El accionamiento se mueve (vibraciones)	D Verschraubung ist locker GB Union is loose F L'assemblage vissé est trop lâche I L'avvitatura è lenta E La atornilladura está suelta	D Verschraubung festziehen GB Tighten union F Serrer à fond l'assemblage vissé I Stringere l'avvitatura E Apretar la atornilladura
D Geräusche im Antrieb GB Noises in the drive F Bruits dans la commande I Rumori nel complesso motore E Ruidos en el accionamiento	D Lager, Motor oder Getriebe defekt GB Bearing, engine or gearbox are faulty F Roulement, moteur ou réducteur défectueux I Cuscinetto, motore o trasmissione difettosi E Cojinete, motor o transmisión defectuoso	D An Fa. VISCO JET wenden GB Consult Fa. VISCO JET F S'adresser à la Sté VISCO JET I Rivolgersi alla ditta VISCO JET E Consultar a VISCO JET
D Anormales Erwärmen des Antriebs GB Abnormal warm of the drive F Echauffement anormal de la commande I Riscaldamento anormale del complesso motore E El accionamiento se sobrecalienta	D Motor oder Getriebe defekt GB Motor or gearbox are faulty F Moteur ou réducteur défectueux I Motore o trasmissione difettosi E Motor o transmisión defectuoso	D An den Motor-/ Getriebe-hersteller wenden / GB Consult the engine-/ gearbox manufacturer / F S'adresser au fabricant de moteur/réducteur I Rivolgersi al produttore del motore / trasmissione E Consultar al fabricante del motor / de la transmisión
D Rührwerk vibriert GB Agitator vibrates F L'agitateur vibre I Il miscelatore vibra E El mezclador vibra	D Welle hat einen Schlag GB Shaft has a blow F L'arbre à un choc I La frusta di miscelazione ha subito un urto E Árbol deformado	D An Fa. VISCO JET wenden GB Consult Fa. VISCO JET F S'adresser à la Sté VISCO JET I Rivolgersi alla ditta VISCO JET E Consultar a VISCO JET
D Schlaggeräusche im Behälter GB Blow noises in the vessel F Bruits de coups dans le récipient I Rumori da urto nel contenitore E Se percibe un golpeteo en el recipiente	D Fremdkörper im Behälter GB Alien element in the vessel F Corps étranger dans le récipient I Corpi estranei nel contenitore E Elemento extraño en el recipiente	D Prüfen und Fremdkörper entfernen GB Check and remove the alien element F Vérifier et enlever le corps étranger I Controllare e allontanare i corpi estranei E Comprobar el recipiente y

D Schraubenanzugsmomente
GB Tightening torques
F Couples de serrage des vis
I Momenti di serraggio di viti
E Pares de apriete de tornillos

VISCO JET®
Rührsysteme GmbH

D Gewinde geschmiert / GB Thread with lubrication / F Filet lubrifié / I Filettatura lubrificata / E Rosca lubricada

18.11.2004 / HS

D Werkstoff-Typ GB Material-type F Type-matériau I Tipo materiale E Tipo de material	D Schraubengröße GB Screw size F Dimensions de vis I Dimensioni viti E Tamaño de tornillo	D Temperatur / GB Temperature / F Température / I Temperatura / E Temperatura (°C)						
		-40	-10	+20	+100	+200	+250	+300
5.6	M8	13	13	13	12	10	9,4	9
	M 10	25	25	25	23	20	18	16
	M 12	44	44	44	40	34	32	29
	M 16	108	108	108	97	83	78	70
	M 20	212	212	212	191	163	152	138
	M 24	365	365	365	330	280	263	236
	M 30	730	730	730	656	555	522	475
8.8	M 8	23	23	23	21	20	19	17
	M 10	49	49	49	45	41	37	35
	M 12	77	77	77	73	68	64	59
	M 16	193	193	193	180	163	154	145
	M 20	378	378	378	350	318	302	284
	M 24	652	652	652	601	552	520	490
10.9	M 12	-	-	89	89	-	-	-
	M 16	-	-	218	218	-	-	-
	M 20	-	-	395	395	-	-	-
	M 24	-	-	720	720	-	-	-
	M 30	-	-	1412	1412	-	-	-
	M 36	-	-	2460	2460	-	-	-
A2-70 A4-70 D Edelstahl GB Stainless steel F Acier fin I Acciaio legato E Acero inoxidable	M 8	16	16	16	14	13	13	12
	M 12	50	50	50	42	40	39	37
	M 16	122	122	122	103	97	94	91
	M 20	207	207	207	176	165	161	155
A4-50	M 24	254	254	254	216	204	197	191

Kräfte an der Rührwerksauflage
Dynamic loads on agitator support
Des forces à l'édition d'agitateur

VISCO JET®
Rührsysteme GmbH

Kunde / *customer* / client : Processtec

Projekt / *project* / projet : VA00000674
Rührwerk / *agitator type* / agitateur type : VJ600.080G

Datum / Kz : 28.10.11/SM
Index : 0

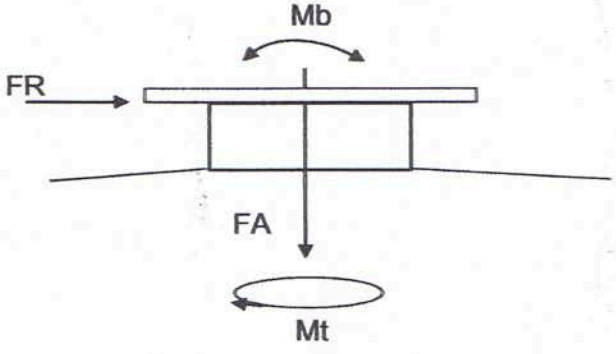

	mit FU-Regelbetrieb / with Frequency inverter / avec convertisseur de fréquence		
	Betrieb / operation / service 60 Hz	Betrieb / operation / service max.	
n_2 =	55	55	min^{-1}
$FA_{min.}$	4.050	4.050	N
$FA_{max.}$	5.134	5.134	N
FR	443	443	N
$Mb_{min.}$	1.036	1.036	Nm
$Mb_{max.}$	2.665	2.665	Nm
$Mt_{max.}$	1.302	1.302	Nm

Slide ring seal change

Please read the manufacturer's description.

Removal:

a) Support agitator shaft.

b) Loosen shrink disc / fastening disc in gearbox. To do this, follow the manufacturer's operating instructions.

c) Loosen and remove the fastening screws on the drive flange.

d) Carefully raise the drive.

e) Loosen and remove lamp head flange.

f) To remove the slide ring seal, follow the manufacturer's operating instructions.

Fitting in reverse order:

g) To fit the slide ring seal, follow the manufacturer's operating instructions.

h) To fix the shaft in the gearbox, follow the manufacturer's operating instructions.

i) When fixing components (shrink disc excepted), refer to the table of screw tightening torques.

General parts list

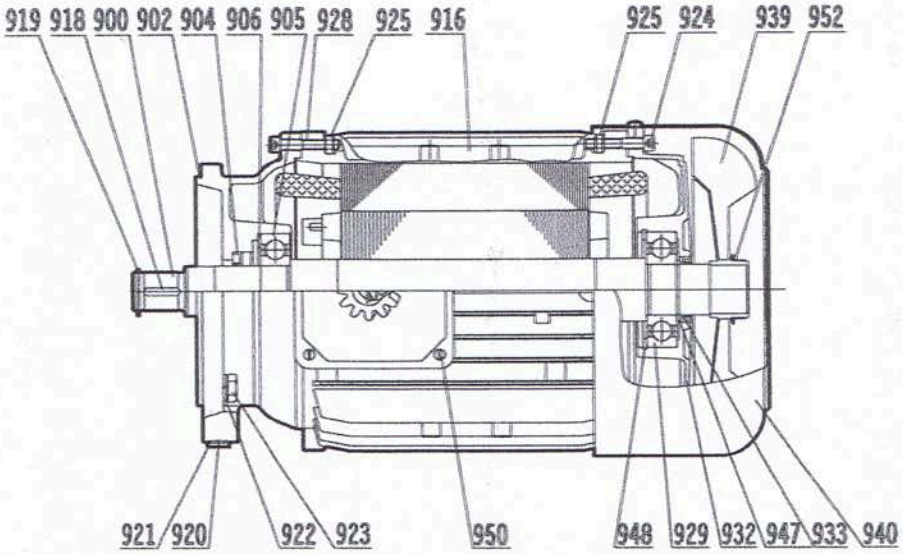

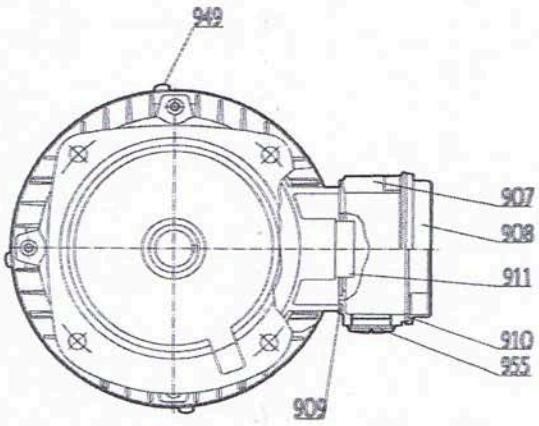

900 Rotor with shaft
902 End shield A
904 Shaft seal
905 Bearing A
906 Bearing shim
907 Terminal box frame
908 Terminal box cover
909 Terminal box frame gasket
910 Terminal box cover gasket
911 Terminal board
916 Stator case
918 Key
919 Circlip
920 Oil-plug
921 Seal
922 Spring washer
923 Hexagon screw
924 Collar screw
925 Hexagon nut
928 Hexagon screw
929 Bearing B
932 End shield B
933 Shaft seal
939 Fan
940 Fan cover
942 Circlip
947 Circlip
948 Circlip
949 Oval flat - head screw
950 Oval flat - head screw
952 Locking ring
955 Plug

Intelligent Drivesystems, Worldwide Services

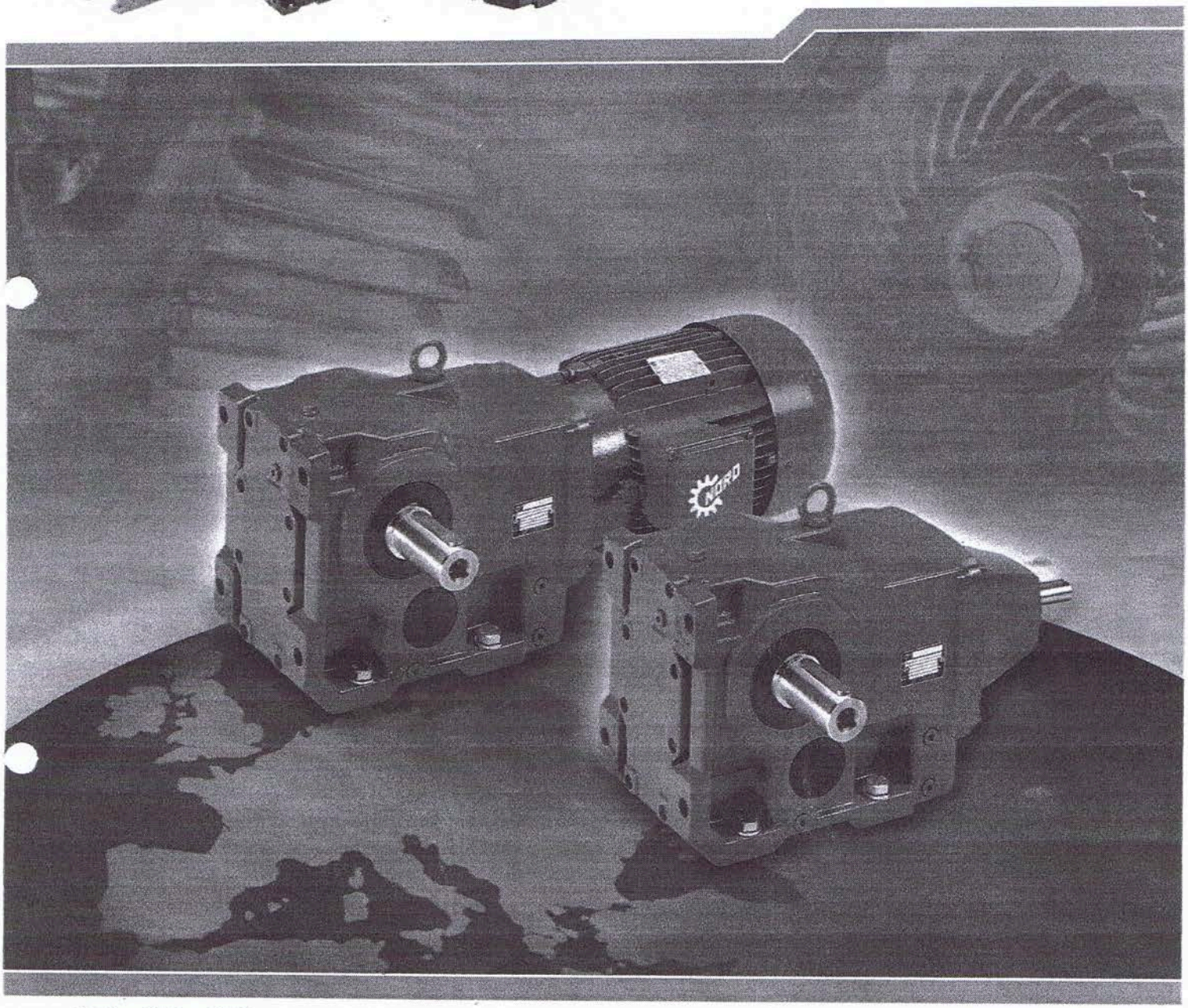

DE GB FR

PL1040

Ersatzteilkatalog Kegelradgetriebe
Spare parts catalogue Unicase Helical Bevel
Catalogue de pièces de rechange des réducteurs à Couple Conique Monoe

NORD DRIVESYSTEMS

Inhaltsübersicht
Table Of Contents
Sommaire

Allgemeine Ersatzteile
General parts list
Vues éclatées et nomenclature

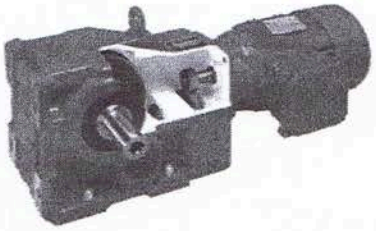

Kegelradgetriebe . . . . . 2 - 15
Helical-Bevel Gear Units
Réducteurs à couple conique

Bestellangaben . . . . . 16 - 17
Order details
Informations de commande

SK 92072 - SK 92772

Kegelradgetriebe
Helical-Bevel Gear Unit
Réducteurs à couple conique

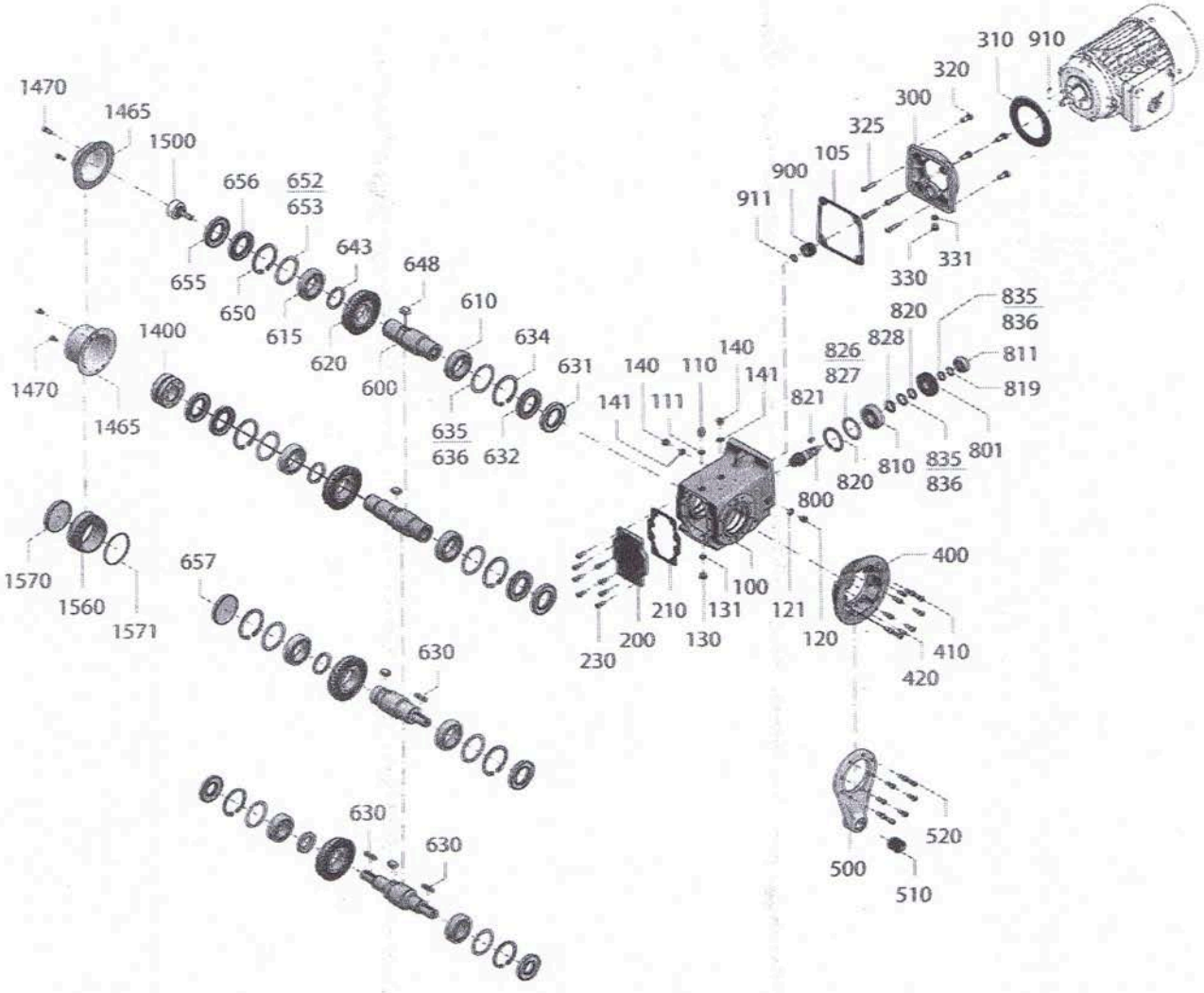

SK 92072 - SK 92772

DE

100 Gehäuse
105 Dichtung
110 Schraube
111 Dichtung
120 Schraube
121 Dichtung
130 Schraube
131 Dichtung
140 Schraube
141 Dichtung
200 Gehäusedeckel
210 Dichtung
230 Schraube
300 Getriebedeckel
310 Dichtung
320 Schraube
325 Schraube
330 Schraube
331 Dichtung
400 Flansch
410 Schraube
420 Stift
500 Drehmomentenstütze
510 Schwingmetallbuchse
520 Schraube
600 Abtriebswelle
610 Wälzlager
615 Wälzlager
620 Abtriebsrad
630 Passfeder
631 Wellendichtring
632 Wellendichtring
634 Sicherungsring
635 Passscheibe
636 Passscheibe
643 Buchse
648 Passfeder
650 Sicherungsring
652 Passscheibe
653 Passscheibe
655 Wellendichtring
656 Wellendichtring
657 Verschlusskappe

↓

GB

100 Housing
105 Seal
110 Screw
111 Seal
120 Screw
121 Seal
130 Screw
131 Seal
140 Screw
141 Seal
200 Housing cover
210 Seal
230 Screw
300 Gear unit cover
310 Seal
320 Screw
325 Screw
330 Screw
331 Seal
400 Flange
410 Screw
420 Pins
500 Torque arm
510 Rubber bonded metal bush
520 Screw
600 Output shaft
610 Roller bearing
615 Roller bearing
620 Output gear
630 Key
631 Radial shaft seal
632 Radial shaft seal
634 Circlip
635 Shim
636 Shim
643 Socket
648 Key
650 Circlip
652 Shim
653 Shim
655 Radial shaft seal
656 Radial shaft seal
657 Sealing cap

↓

FR

100 Boîtier
105 Bague d'étanchéité
110 Vis
111 Bague d'étanchéité
120 Vis
121 Bague d'étanchéité
130 Vis
131 Bague d'étanchéité
140 Vis
141 Bague d'étanchéité
200 Couvercle du carter
210 Bague d'étanchéité
230 Vis
300 Couvercle du réducteur
310 Bague d'étanchéité
320 Vis
325 Vis
330 Vis
331 Bague d'étanchéité
400 Brigde
410 Vis
420 Goupilles
500 Bras de réaction
510 Joint anti-vibratile
520 Vis
600 Arbre de sortie
610 Palier
615 Palier
620 Roue de sortie
630 Clavette
631 Bague d'étanchéité de l'arbre
632 Bague d'étanchéité de l'arbre
634 Circlip
635 Rondelles d'ajustage
636 Rondelles d'ajustage
643 Douille
648 Clavette
650 Circlip
652 Rondelle d'ajustage
653 Rondelle d'ajustage
655 Bague d'étanchéité de l'arbre
656 Bague d'étanchéité de l'arbre
657 Bouchon

↓

SK 92072 - SK 92772

Kegelradgetriebe
Helical-Bevel Gear Unit
Réducteurs à couple conique

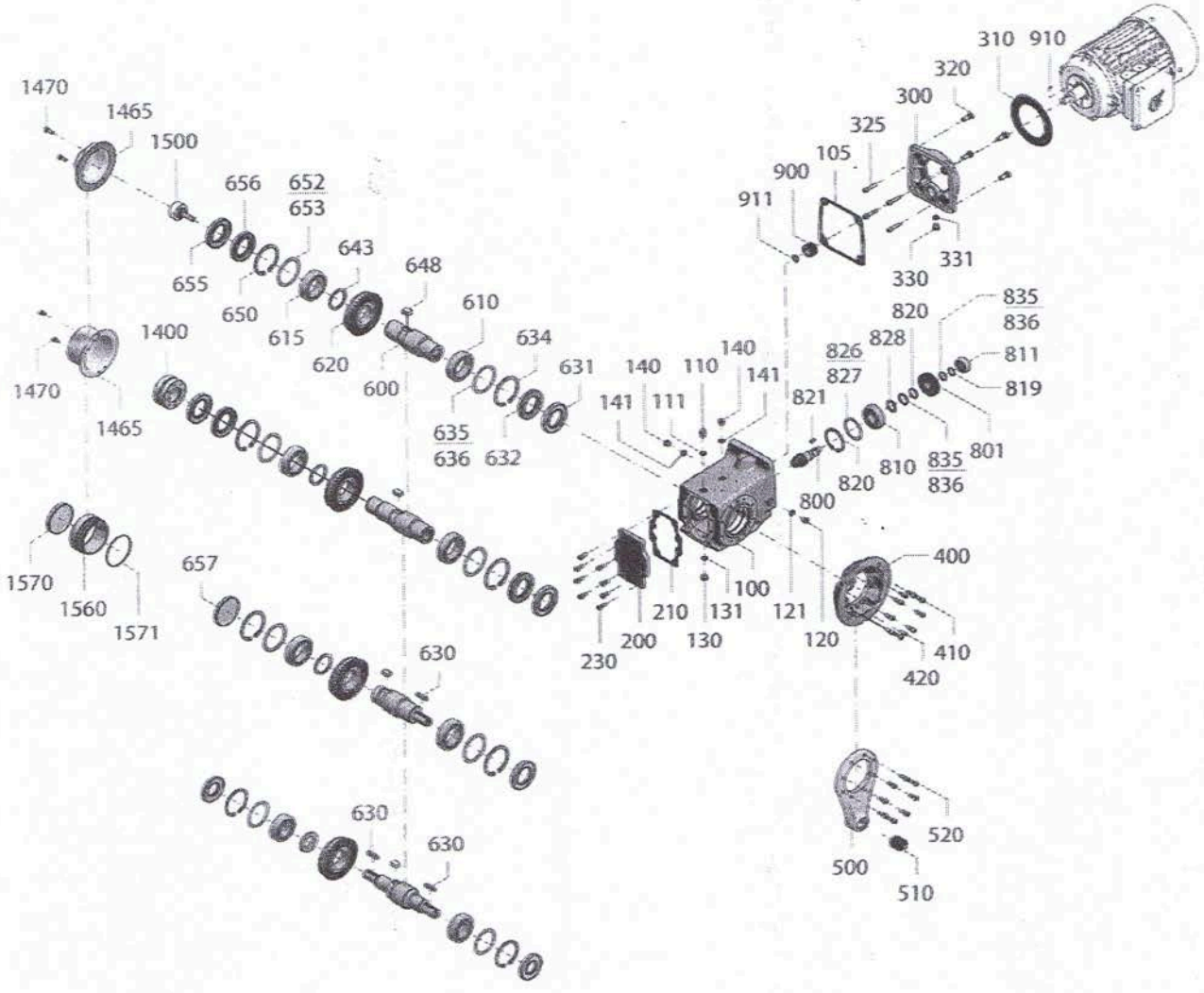

SK 92072 - SK 92772

↑

DE

800	Ritzelwelle
801	Antriebsrad
810	Wälzlager
811	Wälzlager
819	Sicherungsring
820	Sicherungsring
821	Passfeder
826	Passscheibe
827	Passscheibe
828	Stützscheibe
835	Passscheibe
836	Passscheibe
900	Antriebsritzel
910	Passfeder
911	Sicherungsring
1400	Baugruppe Schrumpfscheibe
1465	Haube
1470	Schraube
1500	Befestigungselement
1560	Buchse
1570	Verschlusskappe
1571	O-Ring

↑

GB

800	Pinion shaft
801	Drive gear
810	Roller bearing
811	Roller bearing
819	Circlip
820	Circlip
821	Key
826	Shim
827	Shim
828	Supporting disc
835	Shim
836	Shim
900	Driving pinion
910	Key
911	Circlip
1400	Shrink disc assembly
1465	Cover
1470	Screw
1500	Fixing element
1560	Socket
1570	Sealing cap
1571	O-ring

↑

FR

800	Arbre de pignon
801	Roue d'entrée
810	Palier
811	Palier
819	Circlip
820	Circlip
821	Clavette
826	Rondelle d'ajustage
827	Rondelle d'ajustage
828	Rondelle d'appui
835	Rondelle d'ajustage
836	Rondelle d'ajustage
900	Pignon d'entrée
910	Clavette
911	Circlip
1400	Module de frette de serrage
1465	Capot
1470	Vis
1500	Elément de fixation
1560	Douille
1570	Bouchon
1571	Joint torique

SK 9012.1 - SK 9096.1

Kegelradgetriebe
Helical-Bevel Gear Unit
Réducteurs à couple conique

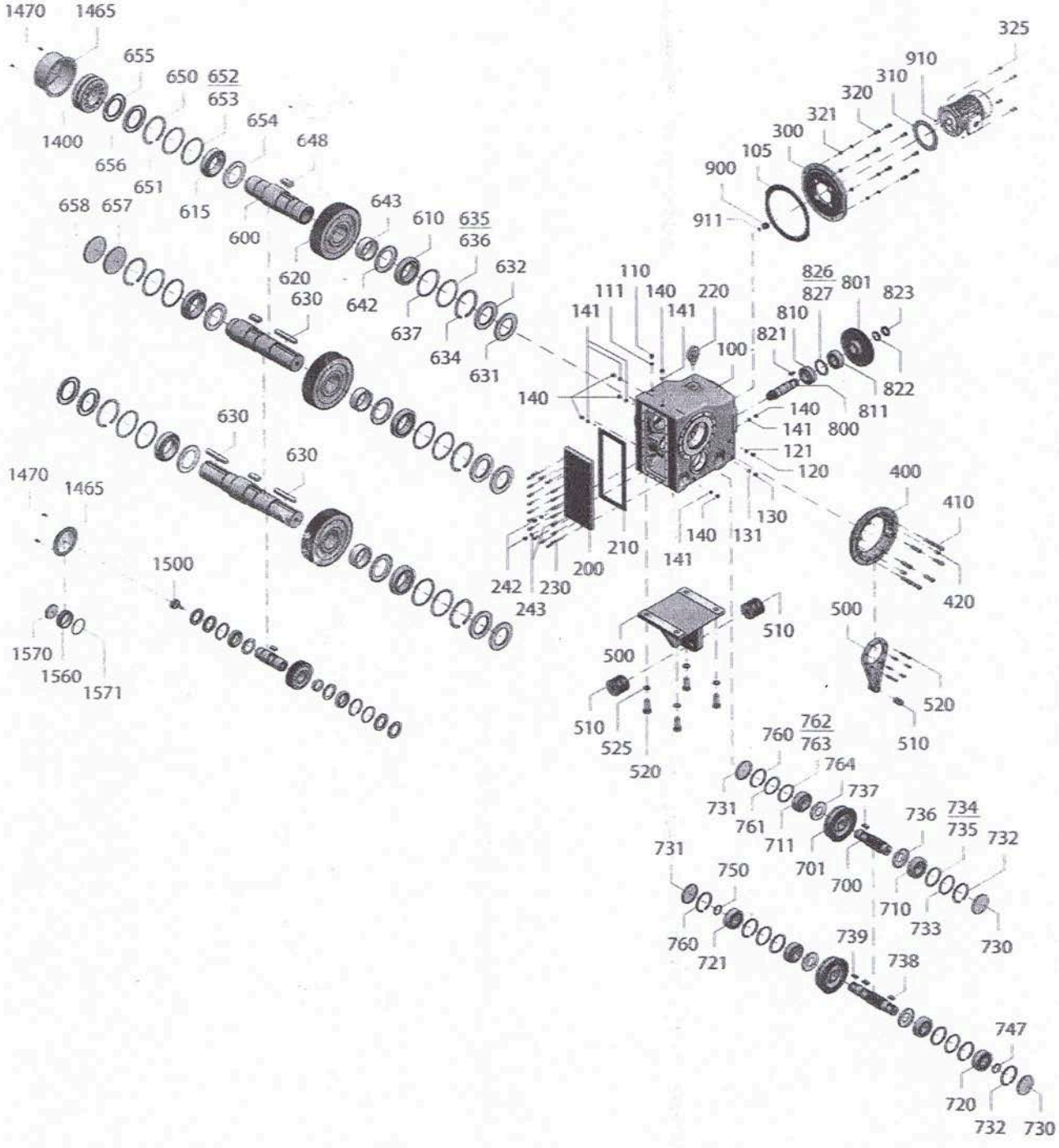

SK 9012.1 - SK 9096.1

DE

100 Gehäuse
105 Dichtung
110 Schraube
111 Dichtung
120 Schraube
121 Dichtung
130 Schraube
131 Dichtung
140 Schraube
141 Dichtung
200 Gehäusedeckel
210 Dichtung
220 Schraube
230 Schraube
242 Schraube
243 Dichtung
300 Getriebedeckel
310 Dichtung
320 Schraube
321 Federring
325 Schraube
400 Flansch
410 Schraube
420 Stift
500 Drehmomentenstütze
510 Schwingmetallbuchse
520 Schraube
600 Abtriebswelle
610 Wälzlager
615 Wälzlager
620 Abtriebsrad
630 Passfeder
631 Wellendichtring
632 Wellendichtring
634 Sicherungsring
635 Passscheibe
636 Passscheibe
637 Stützscheibe
642 Nilosring
643 Buchse
648 Passfeder
650 Sicherungsring
651 Stützscheibe
652 Passscheibe
653 Passscheibe
654 Nilosring
655 Wellendichtring
656 Wellendichtring
657 Verschlusskappe
658 Verschlusskappe

↓

GB

100 Housing
105 Seal
110 Screw
111 Seal
120 Screw
121 Seal
130 Screw
131 Seal
140 Screw
141 Seal
200 Housing cover
210 Seal
220 Screw
230 Screw
242 Screw
243 Seal
300 Gear unit cover
310 Seal
320 Screw
321 Lock washer
325 Screw
400 Flange
410 Screw
420 Pins
500 Torque arm
510 Rubber bonded metal bush
520 Screw
600 Output shaft
610 Roller bearing
615 Roller bearing
620 Output gear
630 Key
631 Radial shaft seal
632 Radial shaft seal
634 Circlip
635 Shim
636 Shim
637 Supporting disc
642 Nilos ring
643 Socket
648 Key
650 Circlip
651 Supporting disc
652 Shim
653 Shim
654 Nilos ring
655 Radial shaft seal
656 Radial shaft seal
657 Sealing cap
658 Sealing cap

↓

FR

100 Boîtier
105 Bague d'étanchéité
110 Vis
111 Bague d'étanchéité
120 Vis
121 Bague d'étanchéité
130 Vis
131 Bague d'étanchéité
140 Vis
141 Bague d'étanchéité
200 couvercle du carter
210 Bague d'étanchéité
220 Vis
230 Vis
242 Vis
243 Bague d'étanchéité
300 Couvercle du réducteur
310 Bague d'étanchéité
320 Vis
321 Rondelle élastique
325 Vis
400 Brigde
410 Vis
420 Goupilles
500 Bras de réaction
510 Joint anti-vibratile
520 Vis
600 Arbre de sortie
610 Palier
615 Palier
620 Roue de sortie
630 Clavette
631 Bague d'étanchéité de l'arbre
632 Bague d'étanchéité de l'arbre
634 Circlip
635 Rondelles d'ajustage
636 Rondelles d'ajustage
637 Rondelle d'appui
642 Anneau Nilos
643 Douille
648 Clavette
650 Circlip
651 Rondelle d'appui
652 Rondelle d'ajustage
653 Rondelle d'ajustage
654 Anneau Nilos
655 Bague d'étanchéité de l'arbre
656 Bague d'étanchéité de l'arbre
657 Bouchon
658 Bouchon

↓

SK 9012.1 - SK 9096.1

Kegelradgetriebe
Helical-Bevel Gear Unit
Réducteurs à couple conique

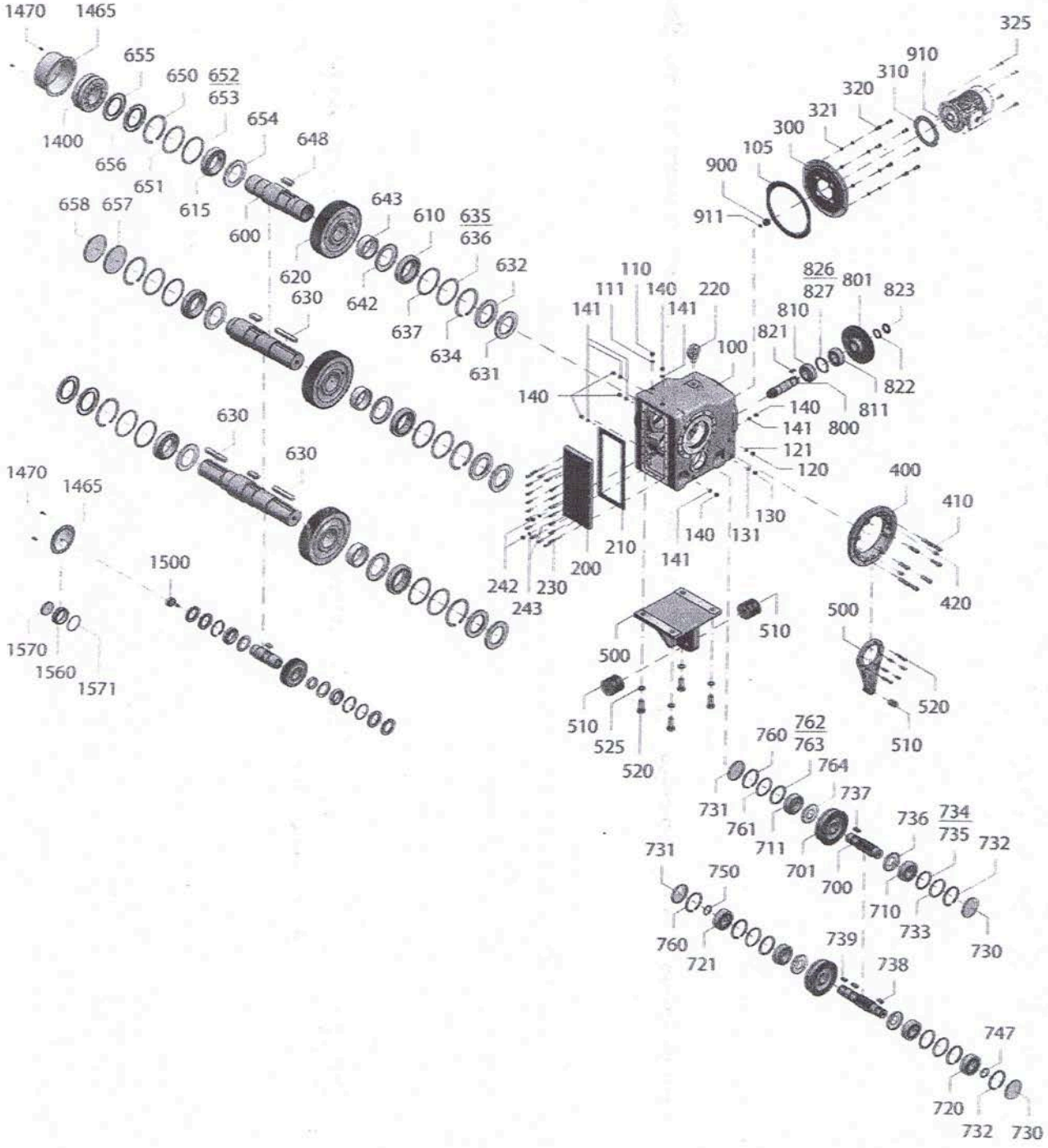

SK 9012.1 - SK 9096.1

↑

DE

700 Ritzelwelle
701 Antriebsrad
710 Wälzlager
711 Wälzlager
720 Rücklaufsperre
721 Rücklaufsperre
730 Verschlusskappe
731 Verschlusskappe
732 Sicherungsring
733 Stützscheibe
734 Passscheibe
735 Passscheibe
736 Nilosring
737 Passfeder
738 Passfeder
739 Passfeder
747 Sicherungsring
750 Sicherungsring
760 Sicherungsring
761 Stützscheibe
762 Passscheibe
763 Passscheibe
764 Nilosring
800 Ritzelwelle
801 Antriebsrad
810 Wälzlager
811 Wälzlager
821 Passfeder
822 Nutmutter
823 Sicherungsblech
826 Passscheibe
827 Passscheibe
900 Antriebsritzel
910 Passfeder
911 Sicherungsring
1400 Baugruppe Schrumpfscheibe
1465 Haube
1470 Schraube
1500 Befestigungselement
1560 Buchse
1570 Verschlusskappe
1571 O-Ring

↑

GB

700 Pinion shaft
701 Drive gear
710 Roller bearing
711 Roller bearing
720 Backstop
721 Backstop
730 Sealing cap
731 Sealing cap
732 Circlip
733 Supporting disc
734 Shim
735 Shim
736 Nilos ring
737 Key
738 Key
739 Key
747 Circlip
750 Circlip
760 Circlip
761 Supporting disc
762 Shim
763 Shim
764 Nilos ring
800 Pinion shaft
801 Drive gear
810 Roller bearing
811 Roller bearing
821 Key
822 Locknut
823 Tab washer
826 Shim
827 Shim
900 Driving pinion
910 Key
911 Circlip
1400 Shrink disc assembly
1465 Cover
1470 Screw
1500 Fixing element
1560 Socket
1570 Sealing cap
1571 O-ring

↑

FR

700 Arbre intermédiare
701 Roue d'entrée
710 Palier
711 Palier
720 Antidévireur
721 Antidévireur
730 Bouchon
731 Bouchon
732 Circlip
733 Rondelle d'appui
734 Rondelle d'ajustage
735 Rondelle d'ajustage
736 Anneau Nilos
737 Clavette
738 Clavette
739 Clavette
747 Circlip
750 Circlip
760 Circlip
761 Rondelle d'appui
762 Rondelle d'ajustage
763 Rondelle d'ajustage
764 Anneau Nilos
800 Arbre de pignon
801 Roue d'entrée
810 Palier
811 Palier
821 Clavette
822 Ecrou à encoches
823 Rondelle d'arrêt
826 Rondelle d'ajustage
827 Rondelle d'ajustage
900 Pignon d'entrée
910 Clavette
911 Circlip
1400 Module de frette de serrage
1465 Capot
1470 Vis
1500 Elément de fixation
1560 Douille
1570 Bouchon
1571 Joint torique

SK 9072.1/32 - SK 9092.1/52

Doppelgetriebe für Kegelradgetriebe
Double Gear Unit for Helical-Bevel Gear Unit
Réducteur double pour couple conique

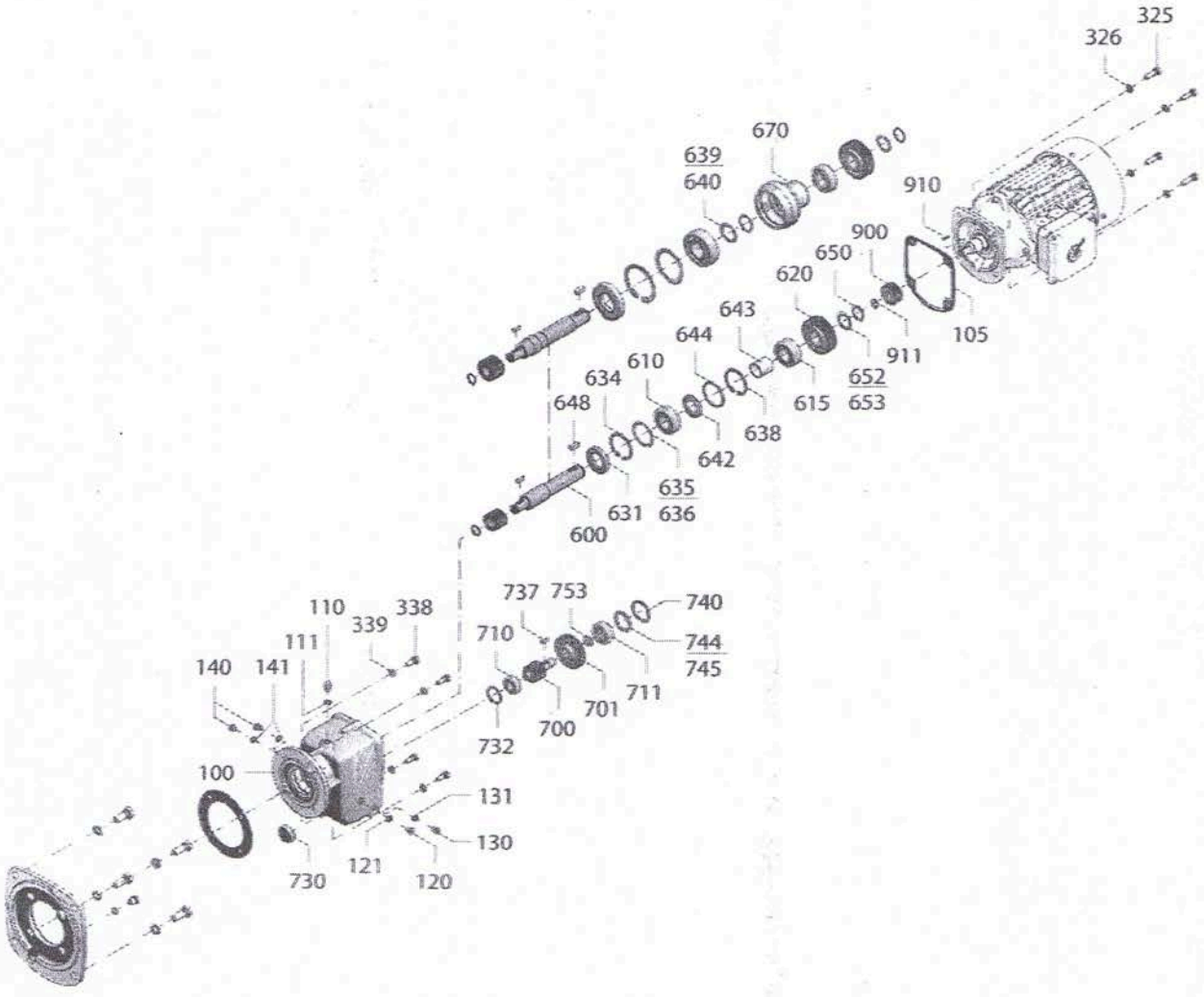

SK 9072.1/32 - SK 9092.1/52

DE

100 Gehäuse
105 Dichtung
110 Schraube
111 Dichtung
120 Schraube
121 Dichtung
130 Schraube
131 Dichtung
140 Schraube
141 Dichtung
325 Schraube
326 Federring
338 Schraube
339 Federring
600 Abtriebswelle
610 Wälzlager
615 Wälzlager
620 Abtriebsrad
631 Wellendichtring
634 Sicherungsring
635 Passscheibe
636 Passscheibe
638 Sicherungsring
639 Passscheibe
640 Passscheibe
642 Nilosring
643 Buchse
644 Buchse
648 Passfeder
650 Sicherungsring
652 Passscheibe
653 Passscheibe
670 Lagerbuchse
700 Ritzelwelle
701 Antriebsrad
710 Wälzlager
711 Wälzlager
730 Verschlusskappe
732 Sicherungsring
737 Passfeder
740 Sicherungsring
744 Passscheibe
745 Passscheibe
753 Buchse
900 Antriebsritzel
910 Passfeder
911 Sicherungsring

GB

100 Housing
105 Seal
110 Screw
111 Seal
120 Screw
121 Seal
130 Screw
131 Seal
140 Screw
141 Seal
325 Screw
326 Lock washer
338 Screw
339 Lock washer
600 Output shaft
610 Roller bearing
615 Roller bearing
620 Output gear
631 Radial shaft seal
634 Circlip
635 Shim
636 Shim
638 Circlip
639 Shim
640 Shim
642 Nilos ring
643 Socket
644 Washer
648 Key
650 Circlip
652 Shim
653 Shim
670 Roller bearing bush
700 Pinion shaft
701 Drive gear
710 Roller bearing
711 Roller bearing
730 Sealing cap
732 Circlip
737 Key
740 Circlip
744 Shim
745 Shim
753 Socket
900 Driving pinion
910 Key
911 Circlip

FR

100 Boîtier
105 Bague d'étanchéité
110 Vis
111 Bague d'étanchéité
120 Vis
121 Bague d'étanchéité
130 Vis
131 Bague d'étanchéité
140 Vis
141 Bague d'étanchéité
325 Vis
326 Rondelle élastique
338 Vis
339 Rondelle élastique
600 Arbre de sortie
610 Palier
615 Palier
620 Roue de sortie
631 Bague d'étanchéité de l'arbre
634 Circlip
635 Rondelle d'ajustage
636 Rondelle d'ajustage
638 Circlip
639 Rondelle d'ajustage
640 Rondelle d'ajustage
642 Anneau Nilos
643 Douille
644 Rondelle
648 Clavette
650 Circlip
652 Rondelle d'ajustage
653 Rondelle d'ajustage
670 Douille de palier
700 Arbre de pignon
701 Roue d'entrée
710 Palier
711 Palier
730 Bouchon
732 Circlip
737 Clavette
740 Circlip
744 Rondelle d'ajustage
745 Rondelle d'ajustage
753 Douille
900 Pignon d'entrée
910 Clavette
911 Circlip

SK 9096.1/62
SK 9096.1/63

Doppelgetriebe für Kegelradgetriebe
Double Gear Unit for Helical-Bevel Gear Unit
Réducteur double pour couple conique

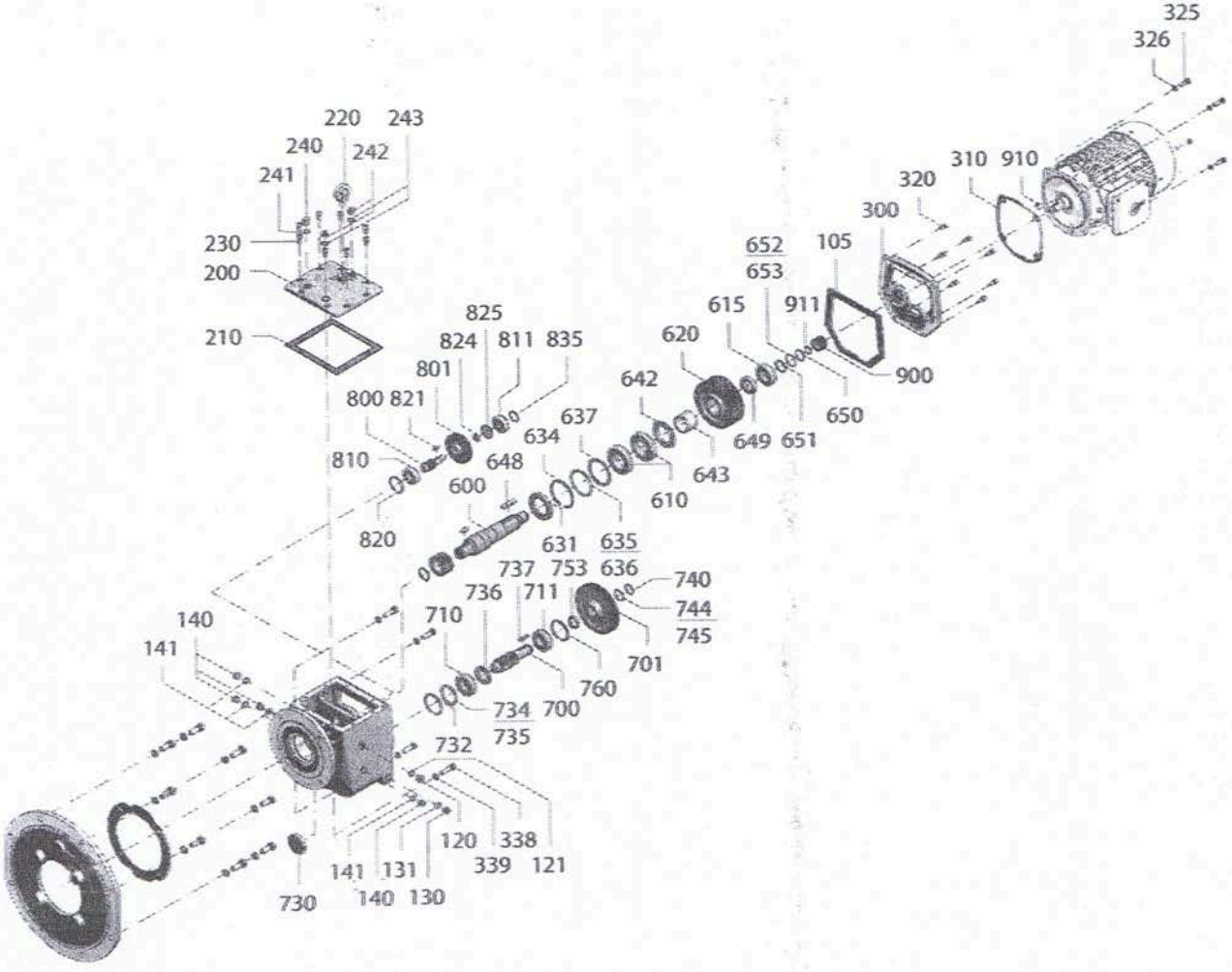

SK 9096.1/62
SK 9096.1/63

DE

100 Gehäuse
105 Dichtung
120 Schraube
121 Dichtung
130 Schraube
131 Dichtung
140 Schraube
141 Dichtung
200 Gehäusedeckel
210 Dichtung
220 Schraube
230 Schraube
240 Schraube
241 Dichtung
242 Schraube
243 Dichtung
300 Getriebedeckel
310 Dichtung
320 Schraube
325 Schraube
326 Federring
338 Schraube
339 Federring
600 Abtriebswelle
610 Wälzlager
615 Wälzlager
620 Abtriebsrad
631 Wellendichtring
634 Sicherungsring
635 Passscheibe
636 Passscheibe
637 Stützscheibe
642 Nilosring
643 Buchse
644 Buchse
648 Passfeder
649 Buchse
650 Sicherungsring
651 Stützscheibe
652 Passscheibe
653 Passscheibe
700 Ritzelwelle
701 Antriebsrad
710 Wälzlager
711 Wälzlager
730 Verschlusskappe
732 Sicherungsring
734 Passscheibe
735 Passscheibe
736 Nilosring
737 Passfeder
740 Sicherungsring
744 Passscheibe
745 Passscheibe
753 Buchse
760 Sicherungsring
800 Ritzelwelle
801 Antriebsrad
810 Wälzlager
811 Wälzlager
821 Passfeder
824 Buchse
825 Nilosring
835 Passscheibe
900 Antriebsritzel
910 Passfeder
911 Sicherungsring

GB

100 Housing
105 Seal
120 Screw
121 Seal
130 Screw
131 Seal
140 Screw
141 Seal
200 Housing cover
210 Seal
220 Screw
230 Screw
240 Screw
241 Seal
242 Screw
243 Seal
300 Gear unit cover
310 Seal
320 Screw
325 Screw
326 Lock washer
338 Screw
339 Lock washer
600 Output shaft
610 Roller bearing
615 Roller bearing
620 Output gear
631 Radial shaft seal
634 Circlip
635 Shim
636 Shim
637 Supporting disc
642 Nilos ring
643 Socket
644 Washer
648 Key
649 Socket
650 Circlip
651 Supporting disc
652 Shim
653 Shim
700 Pinion shaft
701 Drive gear
710 Roller bearing
711 Roller bearing
730 Sealing cap
732 Circlip
734 Shim
735 Shim
736 Nilos ring
737 Key
740 Circlip
744 Shim
745 Shim
753 Socket
760 Circlip
800 Pinion shaft
801 Drive gear
810 Roller bearing
811 Roller bearing
821 Key
824 Socket
825 Nilos ring
835 Shim
900 Driving pinion
910 Key
911 Circlip

FR

100 Boîtier
105 Bague d'étanchéité
120 Vis
121 Bague d'étanchéité
130 Vis
131 Bague d'étanchéité
140 Vis
141 Bague d'étanchéité
200 couvercle du carter
210 Bague d'étanchéité
220 Vis
230 Vis
240 Vis
241 Bague d'étanchéité
242 Vis
243 Bague d'étanchéité
300 Couvercle du réducteur
310 Bague d'étanchéité
320 Vis
325 Vis
326 Rondelle élastique
338 Vis
339 Rondelle élastique
600 Arbre de sortie
610 Palier
615 Palier
620 Roue de sortie
631 Bague d'étanchéité de l'arbre
634 Circlip
635 Rondelle d'ajustage
636 Rondelle d'ajustage
637 Rondelle d'appui
642 Anneau Nilos
643 Douille
644 Rondelle
648 Clavette
649 Douille
650 Circlip
651 Rondelle d'appui
652 Rondelle d'ajustage
653 Rondelle d'ajustage
700 Arbre de pignon
701 Roue d'entrée
710 Palier
711 Palier
730 Bouchon
732 Circlip
734 Rondelle d'ajustage
735 Rondelle d'ajustage
736 Anneau Nilos
737 Clavette
740 Circlip
744 Rondelle d'ajustage
745 Rondelle d'ajustage
753 Douille
760 Circlip
800 Arbre de pignon
801 Roue d'entrée
810 Palier
811 Palier
821 Clavette
824 Douille
825 Bague Nilos
835 Rondelle d'ajustage
900 Pignon d'entrée
910 Clavette
911 Circlip

SK 9013.1 - SK 9053.1

Anbaugehäuse für Kegelradgetriebe
Add-on housing for Helical-Bevel Gear Unit
Boîtier troisième train pour réducteurs à couple conique

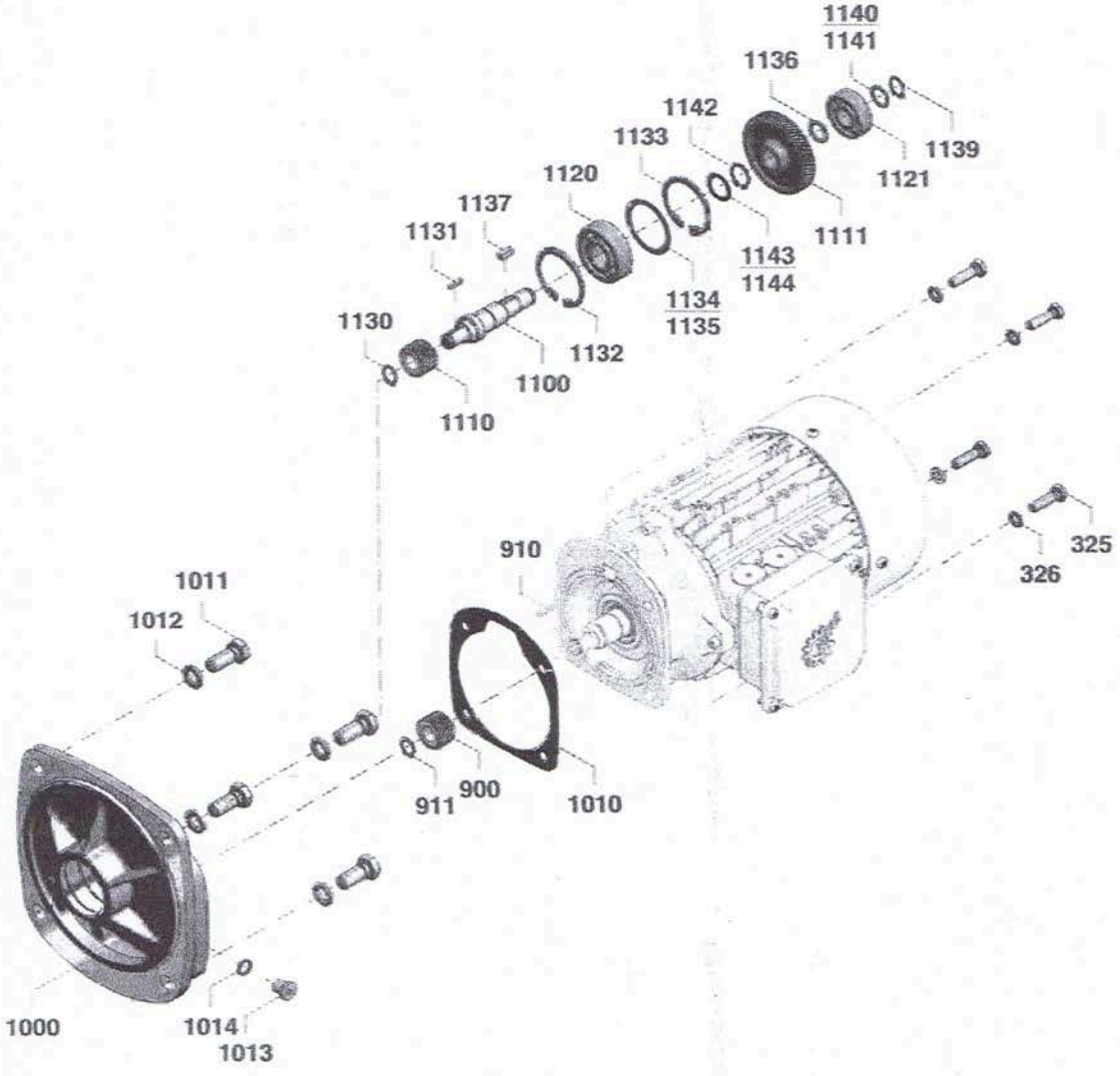

SK 9013.1 - SK 9053.1

DE

325	Schraube
326	Federring
900	Antriebsritzel
901	Schneckenwelle
910	Passfeder
911	Sicherungsring
1000	Anbaugehäuse
1010	Motordichtung
1011	Schraube
1012	Federring
1013	Schraube
1014	Dichtring
1100	Zwischenwelle
1110	Antriebsritzel
1111	Antriebsrad
1120	Wälzlager
1121	Wälzlager
1130	Sicherungsring
1131	Passfeder
1132	Sicherungsring
1133	Sicherungsring
1134	Passscheibe
1135	Passscheibe
1136	Buchse
1137	Passfeder
1139	Sicherungsring
1140	Passscheibe
1141	Passscheibe
1142	Sicherungsring
1143	Passscheibe
1144	Passscheibe

GB

325	Screw
326	Lock washer
900	Drive gear
901	Worm shaft
910	Key
911	Circlip
1000	Add-on housing
1010	Gasket
1011	Screw
1012	Lock washer
1013	Screw plug
1014	Seal
1100	Intermediate shaft
1110	Driving pinion
1111	Drive gear
1120	Roller bearing
1121	Roller bearing
1130	Circlip
1131	Key
1132	Circlip
1133	Circlip
1134	Shim
1135	Shim
1136	Socket
1137	Key
1139	Circlip
1140	Shim
1141	Shim
1142	Circlip
1143	Shim
1144	Shim

FR

325	Vis
326	Rondelle élastique
900	Pignon d'entrée
901	Arbre à vis
910	Clavette
911	Circlip
1000	Boîtier
1010	Joint moteur
1011	Vis
1012	Rondelle élastique
1013	Vis
1014	Bague d'étanchéité
1100	Arbre de pignon
1110	Pignon d'entrée
1111	Roue d'entrée
1120	Palier
1121	Palier
1130	Circlip
1131	Clavette
1132	Circlip
1133	Circlip
1134	Rondelle d'ajustage
1135	Rondelle d'ajustage
1136	Douille
1137	Clavette
1139	Circlip
1140	Rondelle d'ajustage
1141	Rondelle d'ajustage
1142	Circlip
1143	Rondelle d'ajustage
1144	Rondelle d'ajustage

Bestellangaben
Order details
Informations de commande

Kontaktdaten / Contact details / Contacts:

Firma / Company / Entreprise:

Straße / Street / Rue

Stadt / Town / Ville:

PLZ / Postcode/ Code postal:

Telefon / Telephone / Téléphone:

Fax:

E-mail:

Getriebebau NORD

Rudolf-Diesel-Straße 1
D-22941 Bargteheide
Telefon +49(0) 4532/401-0
Telefax +49(0)4532/401-253
E-Mail info@nord.com
www.nord.com

DE

Diese NORD Ersatzteilliste beinhaltet eine standardisierte Darstellung der NORD Getriebe. Um Ihnen das Finden und Nachbestellen von Ersatzteilen zu erleichtern, finden Sie am Ende der Ersatzteilliste ein Bestellformular mit wichtigen Hinweisen zur Bestimmung der richtigen Teile.

Für Rückfragen stehen wir Ihnen gerne zur Verfügung. Ihren lokalen Ansprechpartner finden Sie unter http://locator.nord.com.

GB

This NORD spare parts list contains a standardised depiction of NORD gear units. In order to enable you to find and re-order replacement parts more easily, you can find an order form and important information regarding the identification of the correct components at the end of this spare parts list.

We will be glad to help you if you have any queries: You can find your local contact partner under http://locator.nord.com.

FR

Cette liste de pièces de rechange NORD contient une représentation standard des réducteurs NORD. Pour faciliter la recherche et la commande de pièces de rechange, un formulaire de commande se trouve à la fin de la liste des pièces de rechange et vous donne toutes les informations essentielles pour déterminer les pièces dont vous avez besoin.

En cas de questions, n'hésitez pas à nous contacter. Pour connaître votre interlocuteur local, veuillez consulter le site http://locator.nord.com.

Bestellangaben
Order details
Informations de commande

Erläuterung des Typenschildes
Explanation of the rating plate
Explication de la plaque signalétique

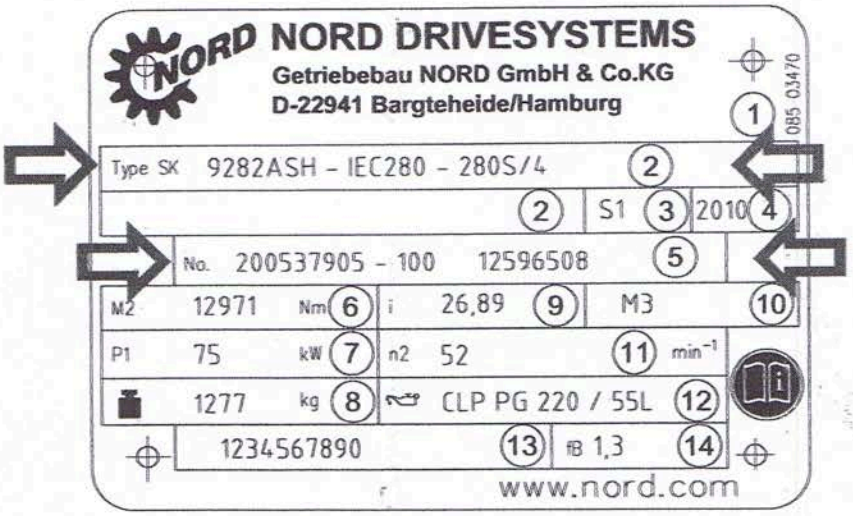

DE

1 Matrix – Barcode
2 NORD - Getriebetyp
3 Betriebsart
4 Herstellungsjahr
5 Fabrikationsnummer
6 Nenndrehmoment der Getriebeabtriebswelle
7 Antriebsleistung
8 Gewicht entsprechend Auftragsausführung
9 Gesamte Getriebeübersetzung
10 Einbaulage
11 Nenndrehzahl der Getriebeabtriebswelle
12 Schmierstoffart, -viskosität und –menge
13 Kundenmaterialnummer
14 Betriebsfaktor

GB

1 Matrix – Barcode
2 NORD gear unit type
3 Operating mode
4 Year of manufacture
5 Serial number
6 Rated torque of gear unit output shaft
7 Drive power
8 Weight according to ordered version
9 Overall gear unit ratio
10 Installation orientation
11 Rated speed of gear unit output shaft
12 Lubricant type, viscosity and quantity
13 Customer's part number
14 Operating factor

FR

1 Code matriciel, à barres
2 Type de réducteur NORD
3 Mode de fonctionnement
4 Année de fabrication
5 Numéro de série
6 Couple nominal de l'arbre de sortie du réducteur
7 Puissance d'entraînement
8 Poids selon l'exécution du contrat
9 Rapport de réduction total
10 Position de montage
11 Vitesse de rotation nominale de l'arbre de sortie du réducteur
12 Type de lubrifiant, viscosité et quantité
13 Numéro d'article client
14 Facteur de service

Ersatzteil-Bestellung / Replacement parts order / Commande de pièces de rechange:

Bezeichnung / Designation / Désignation:

Pos.-Nr. / Item No. / N° pos :

Stückzahl / Pieces / Quantité:

Getriebetyp / Gear unit type / Type de réducteur:

Fabrikationsnummer / Serial No. / Numéro de série:

NORD Drivesystems | Global vor Ort

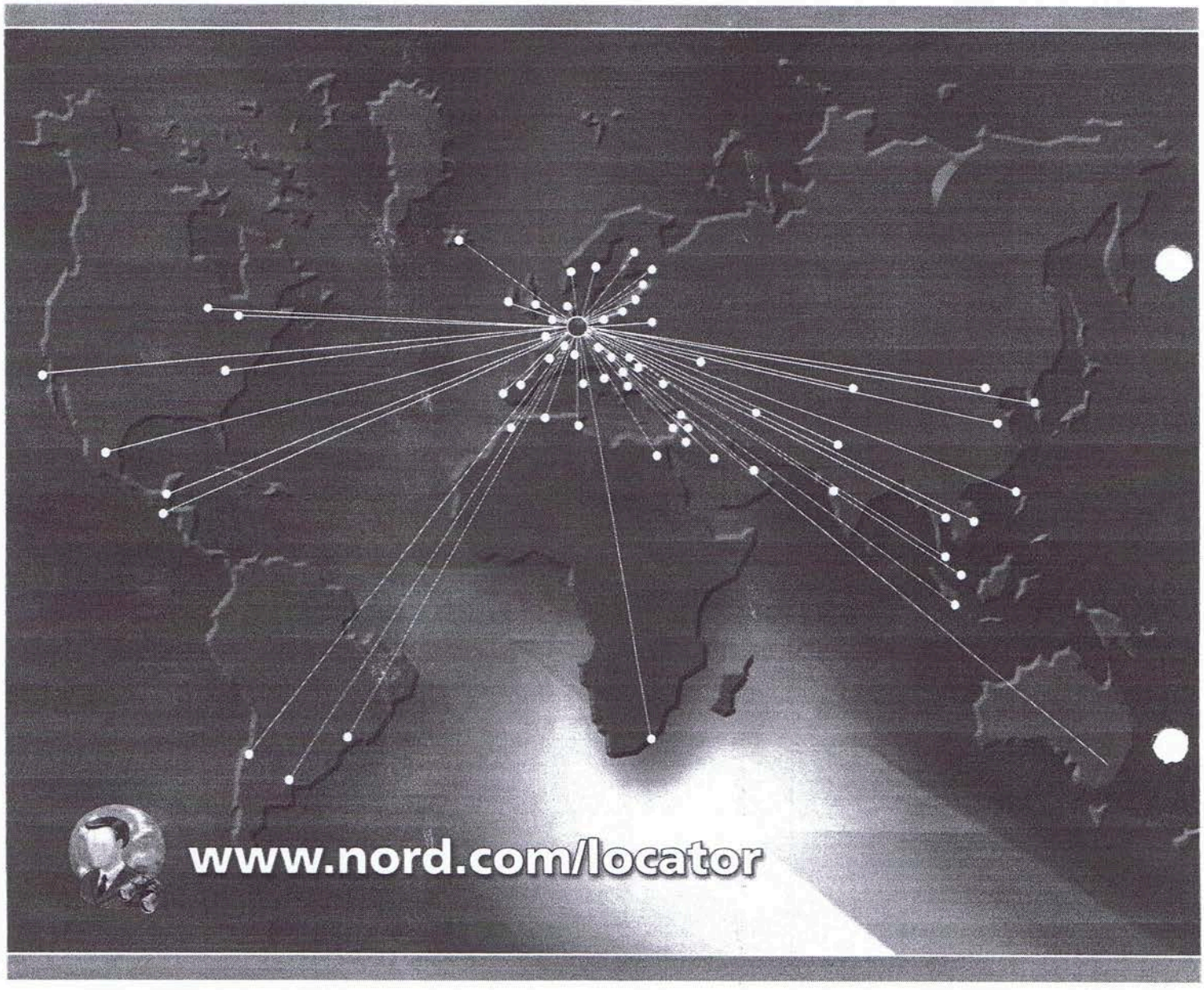

(DE) **Getriebebau NORD GmbH & Co. KG**
Rudolf-Diesel-Str. 1
D-22941 Bargteheide
Fon +49 (0) 4532 / 401 - 0
Fax +49 (0) 4532 / 401 - 253
info@nord.com
www.nord.com

NORD
DRIVESYSTEMS

t.Nr. 6002099/0611

VISCO JET®
Rührsysteme GmbH

VISCO JET Rührsysteme GmbH
Daimlerstraße 1
D-79761 Waldshut-Tiengen
Telefon: +49 7741 96567 0
Telefax: +49 7741 96567 15
info@viscojet.com
www.viscojet.com

Ust.ID.Nr. DE 815 284 707

Assembly declaration
in the spirit of the EC Machinery Directive 2006/42/EC

Company

VISCO JET Rührsysteme GmbH
Daimlerstr. 1
79761 Waldshut – Tiengen
Germany

The machine / the component

Manufacturer: **VISCO JET**
Type: **Bottom-entry agitator type VJ600.080G**
Machine no.: **12222**

has been developed, designed and produced in accordance with the aforementioned EC Directives.

The following harmonised standards have been applied:

- DIN EN ISO 12100: 2010/ Safety of machinery

Technical documentation is available.
The operating manual for the machinery / machinery section is available

☒ in its original version

Authorised to compile the relevant technical documentation: Gabriela Ziel-Gantert

Acceptance of this machinery / machinery section is prohibited until it has been proven that the machinery in which it is to be fitted corresponds to the rulings of the EC Machinery Directive.

Waldshut-Tiengen, dated 31.01.2012 Managing director & shareholder

Town/city, date *Signature* *Details of signatory*

CHESTERTON.
Global Solutions, Local Service.

Dear Chesterton Customer:

Thank you for buying a Chesterton Mechanical Seal. We believe you have bought the finest sealing device on the market today.

By purchasing this seal, you are now part of the A.W. Chesterton Company's Exchange Seal Program or Repair Program (this includes seals returned for analysis). It is necessary that any hazardous residues contained on the return seal be properly identified before we can handle it. In order to participate in this program, certain OSHA Hazard Communication Standard requirements must be followed when you return the seal:

A. Non-Hazardous Material

If the material that the seal has been sealing is nonhazardous, check off the nonhazardous box on the enclosed label. Complete the certification section of part 3 and fill in the information requested in part 1. Attach the label to each container you place the seal in.

SHIP ONLY 1 SEAL PER LABELED BOX OR CONTAINER

B. Hazardous Material

1. You, the USER, have the choice of cleaning/decontaminating the seal, thus reducing your time and paper work. If you choose this option, you must disassemble the seal, decontaminate it, package all the parts and attach a label. Check off the box on the enclosed label as Non-Hazardous and sign your name in the space provided and print in your company name and address.
2. If you wish to return the seal in the "as is" condition, mark all sections of the enclosed label that are appropriate, and write in the chemical name or identifier, as well as your company name and address. Attach the Material Safety Data Sheet (MSDS) for material the seal was in contact with. The chemical name or identifier must match the MSDS that you will supply with the returned seal. Place the seal INSIDE a plastic bag and seal before packing. We would appreciate it if the seal was in a reasonably clean condition when returned.
3. FILL OUT AND ATTACH THE LABEL TO THE CONTAINER YOU PLACE THE SEAL IN.

DIRECTIONS FOR LABEL:

Section 1: FILL THESE SECTIONS OUT FOR ALL SEALS.
a. Fill out Company Name, address, telephone number.

Section 2: FILL THIS SECTION OUT FOR HAZARDOUS SEALS.
a. Check off Hazardous;
b. Check MSDS for material that was in contact with seal, check off matching Hazards;
c. Check off if MSDS is enclosed, sent separately or sent previously;
d. Write in chemical/identity name, making sure it matches name on MSDS sheet

860 Salem Street

Section 3: FILL OUT THIS SECTION IF THE SEAL HAS NOT BEEN EXPOSED TO ANY HAZARDOUS MATERIAL OR THE SEAL HAS BEEN DISASSEMBLED, CLEANED/ DECONTAMINATED.

a. Check off Non-Hazardous;
b. Fill in the use of seal (material seal was in contact with);
c. Sign your name;
d. Print or type your name;
e. Fill in your title or position.

4. SHIP ONLY 1 SEAL PER LABELED BOX OR CONTAINER.

You may use the original Chesterton Box or any other box to place your seal in, and attach the label to this box.

Many boxed/labeled seals can be put in 1 shipping container.

Please note that all seals returned to the Chesterton Company should be *reasonably clean of excessive amounts of external residues.*

C. Materials Not Accepted in Program

These materials will not be accepted in the Exchange/Repair Programs unless the seal is disassembled and cleaned/decontaminated.

A. Radioactive Materials***
B. Biohazards, Level 2,3,4
C. Toxics: Polychlorinated Biphenyl (PCB'S), Dichlorodiphenyltrichloroethane (DDT), and DIOXIN.
D. Any chemical material referenced in the Dept. of Transportation (DOT) Hazardous Materials Table 49 CFR 172.101, Column 3 (Hazard Class) as Forbidden, Class 1 or Class 7
E. Explosive Material (including Azides)

***Radioactive materials will not be accepted even if decontaminated or cleaned.

Thank you again for buying a Chesterton Product and we look forward to serving you in the future.
If you have questions about these procedures, call your distributor or

A.W. CHESTERTON COMPANY
(978) 469-6446

04/2007

S10/S20 Installation Instructions

PREPARATION

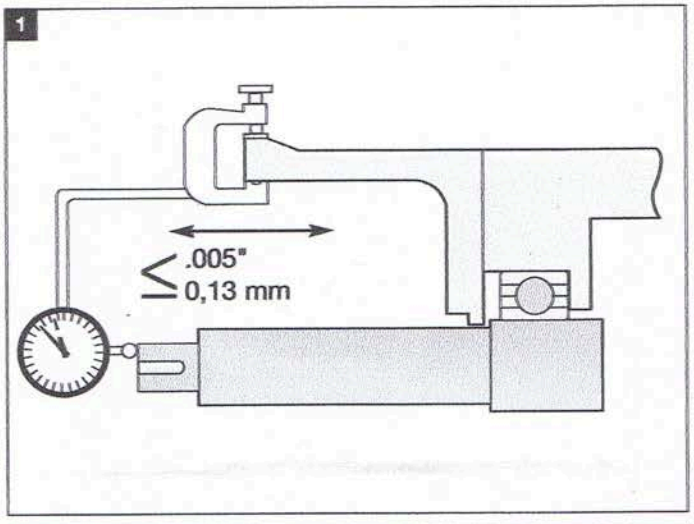

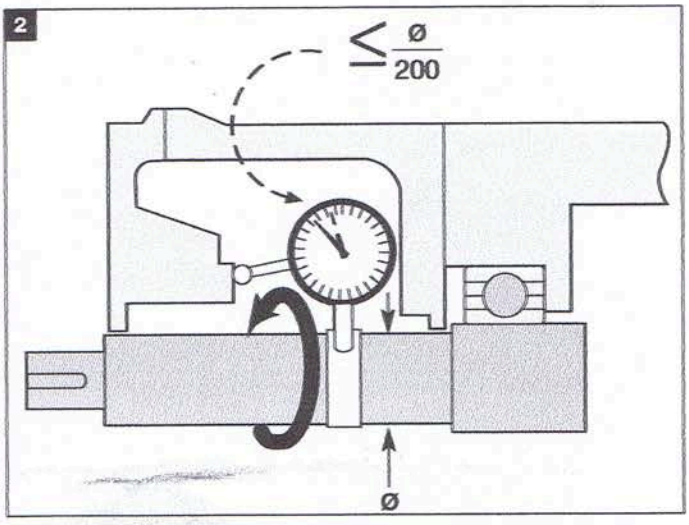

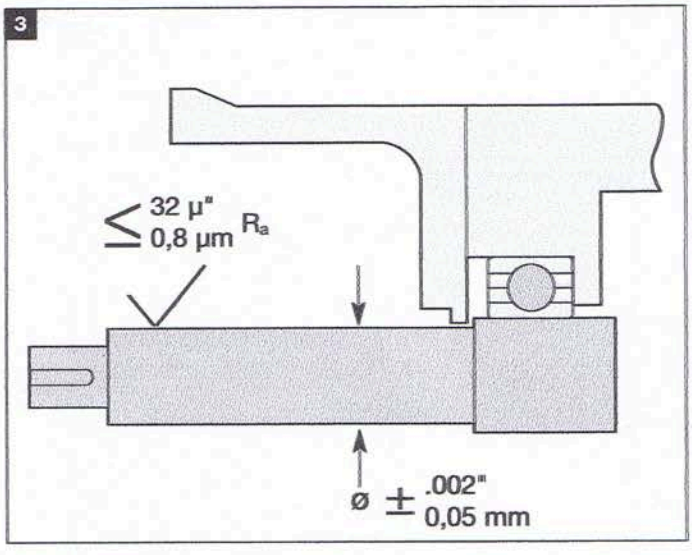

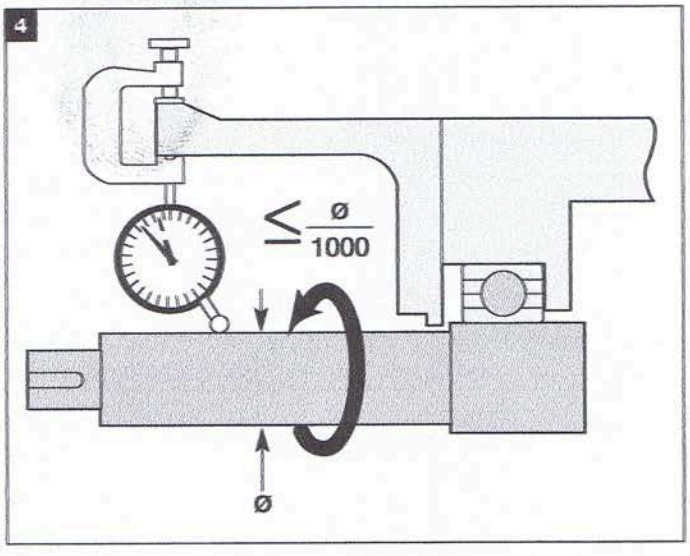

CAUTIONS

These instructions are general in nature. It is assumed that the installer is familiar with seals and certainly with the requirements of their plant for the successful use of mechanical seals. If in doubt, get assistance from someone in the plant who is familiar with seals or delay the installation until a seal representative is available. All necessary auxiliary arrangements for successful operation (heating, cooling, flushing) as well as safety devices must be employed. These decisions are to be made by the user. The chemical listing is intended as a **general** reference for this seal **only.** The decision to use this seal or any other Chesterton seal in a particular service is the customer's responsibility.

S10/S20 LOCK RING ASSEMBLY / TORQUE TABLE

S10/S20
XS/Small Lock Ring

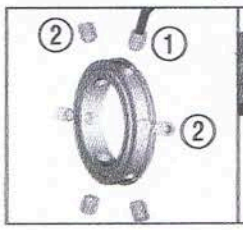

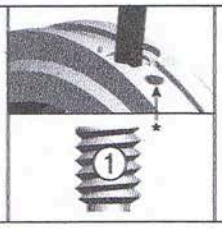

S10/S20
Large Lock Ring

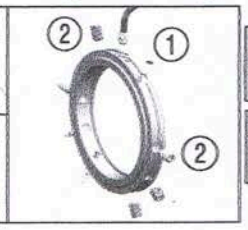

S10/S20
Set Screw/Bolting Torques Table

SEAL SIZE	DOG POINT SET SCREWS	CUP POINT SET SCREWS	STUFFING BOX BOLTS
up to 2.50" (60 mm)	50-60 in-lbf (5,7-6,8 Nm)	50-60 in-lbf (5,7-6,8 Nm)	20-30 ft-lbf (27-40 Nm)
up to 4.75" (120 mm)	65-75 in-lbf (7,3-8,3 Nm)	65-75 in-lbf (7,3-8,3 Nm)	25-35 ft-lbf (34-48 Nm)

* See marks on the lock ring for the Dog Point Set Screws (1)

S10 SEAL GLAND / CASSETTE MATERIAL COMPATIBILITY

NOTE: The Gland and Cassette must be the same material.
See S10 Gland / Cassette Material Chart to the right.

GLAND	CASSETTE
316	316
A20	A20
Hastelloy C	Hastelloy C
Titanium	Titanium
HB	HB
Monel	Monel

S10/S20 GLAND PLUG INSTALLATION

S10 Streamline Single Seal

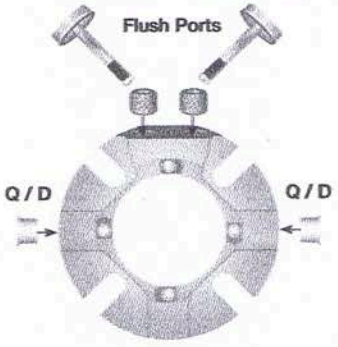

S20 Streamline Dual Seal

Barrier/Buffer Ports

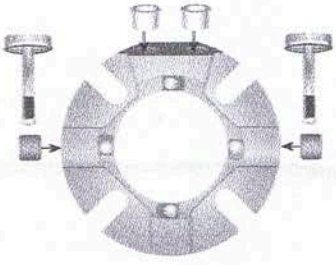

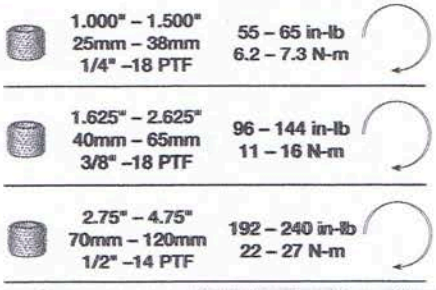

Recommended:
Loctite® PST® 567 Paste*
Chesterton GoldEnd® Tape

* Loctite is a Registered Trademark of Loctite Corporation U.S.A.

INSTALLATION

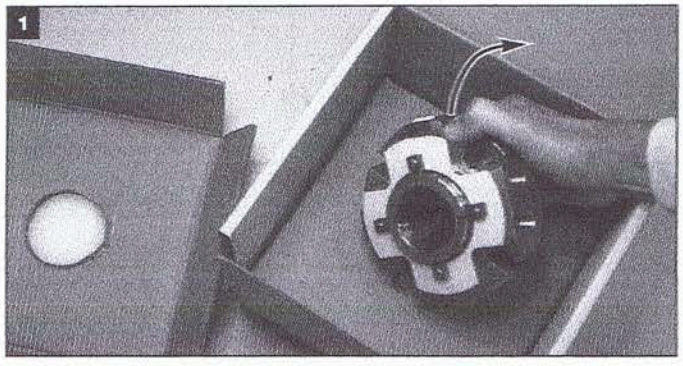

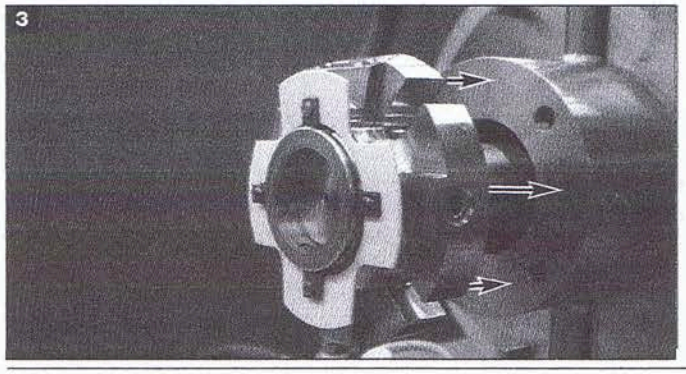

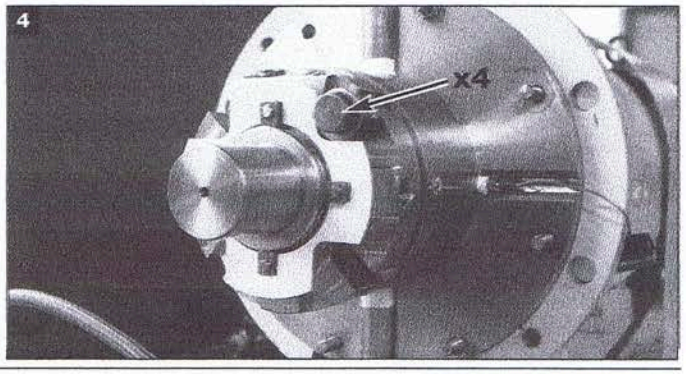

CHESTERTON
Global Solutions, Local Service.

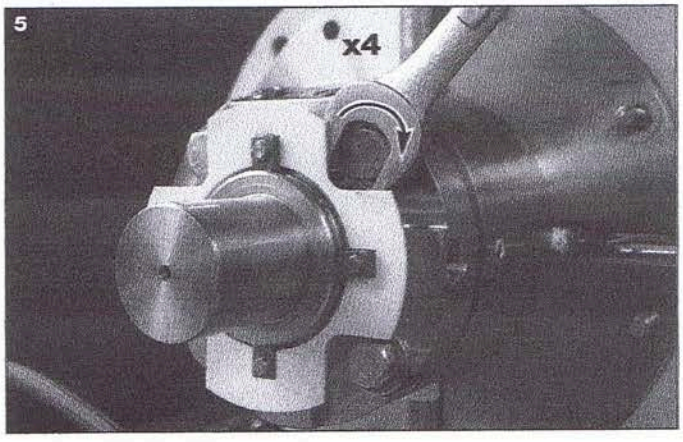
5
x4

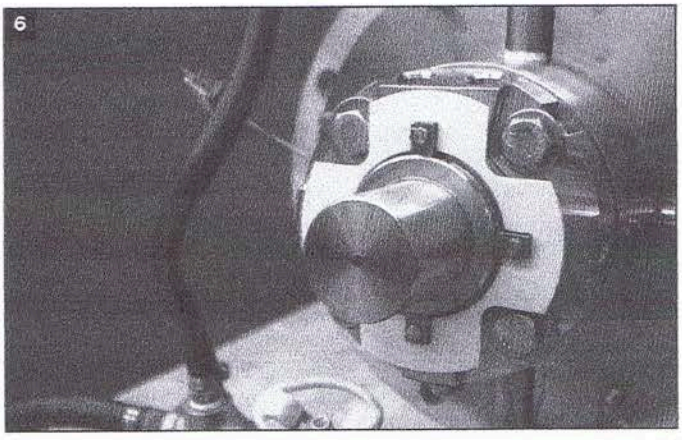
6

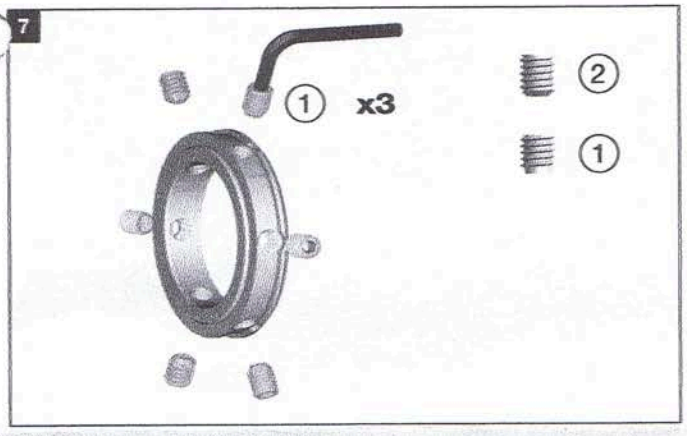
7
1
x3
2
1

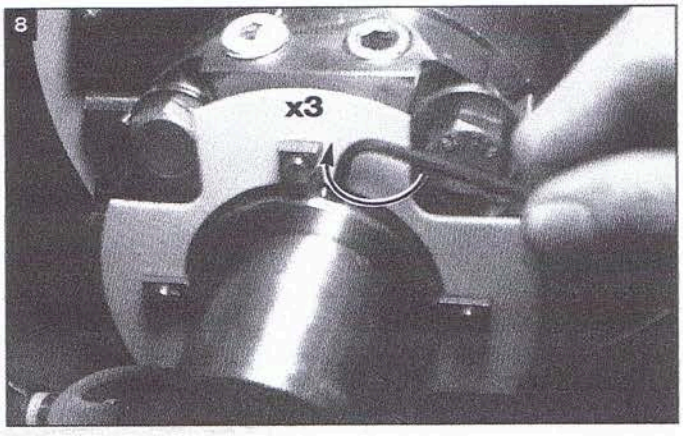
8
x3

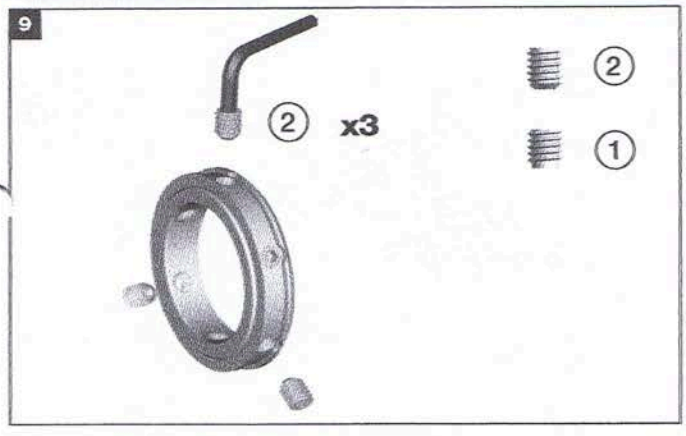
9
2
x3
2
1

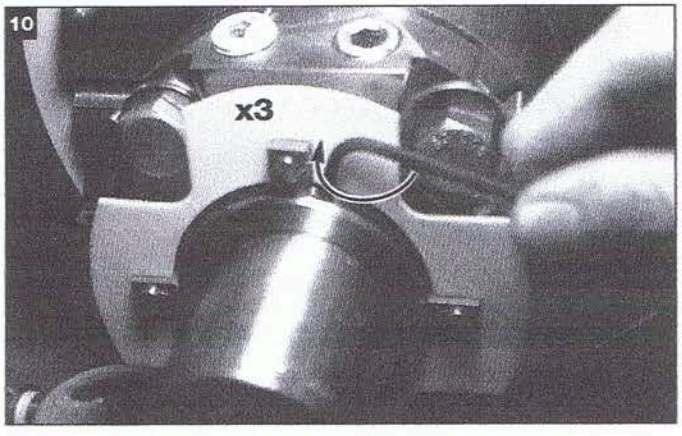
10
x3

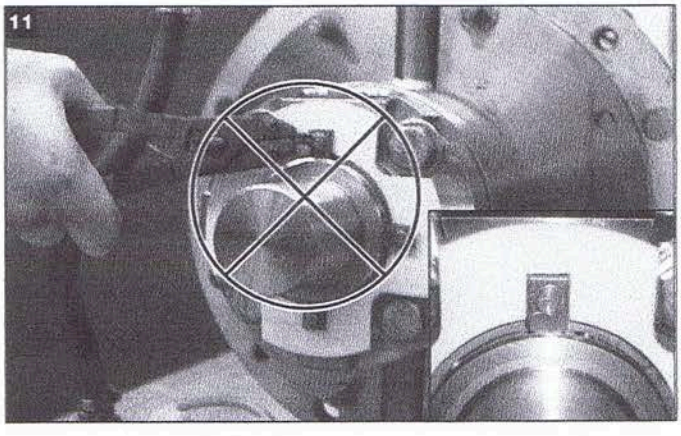
11

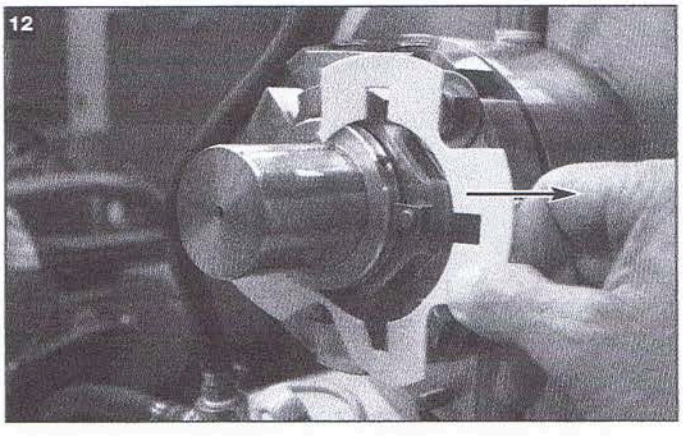
12

ENVIRONMENTAL CONTROLS

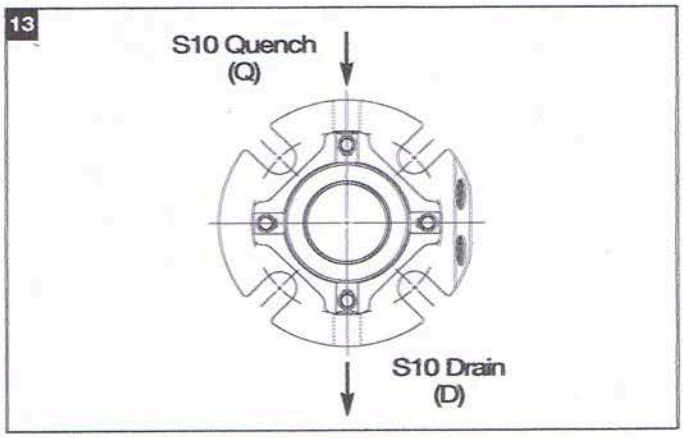

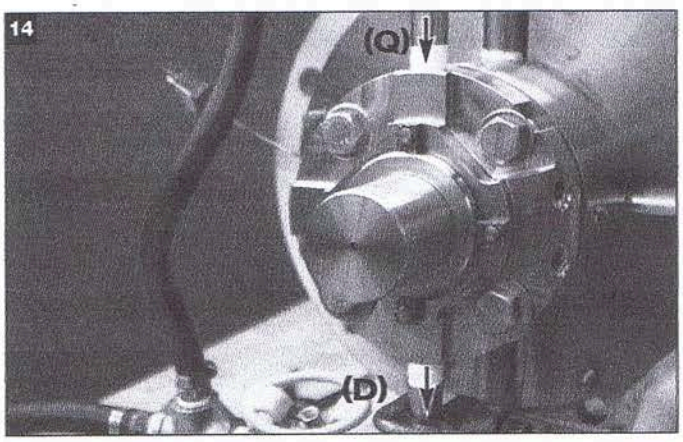

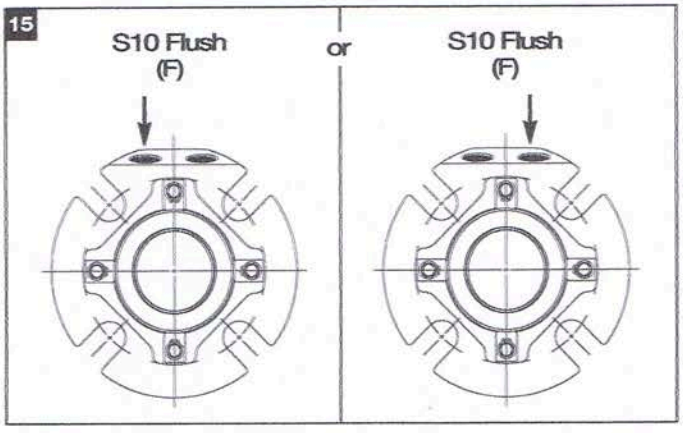

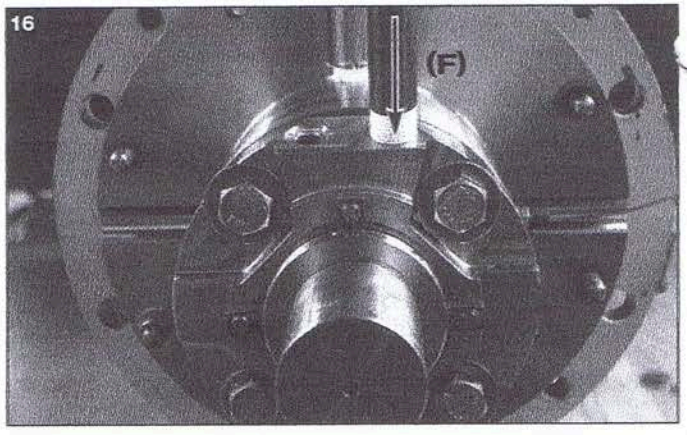

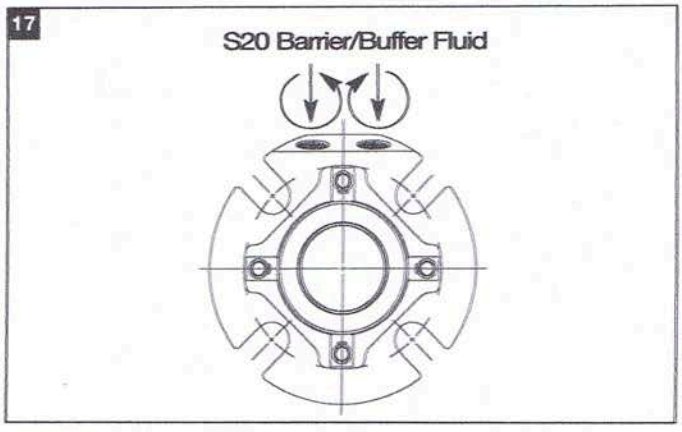

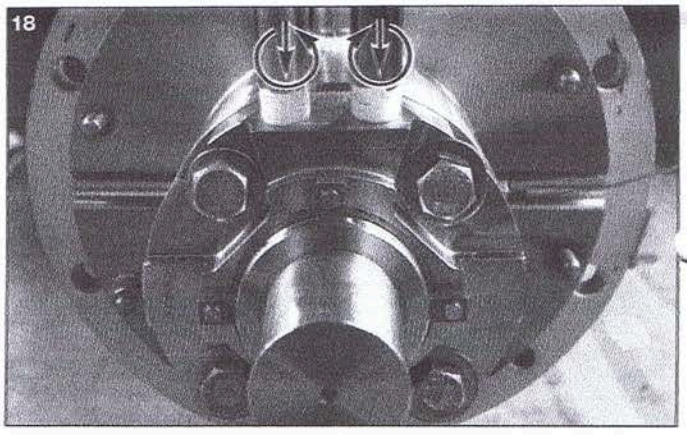

START-UP

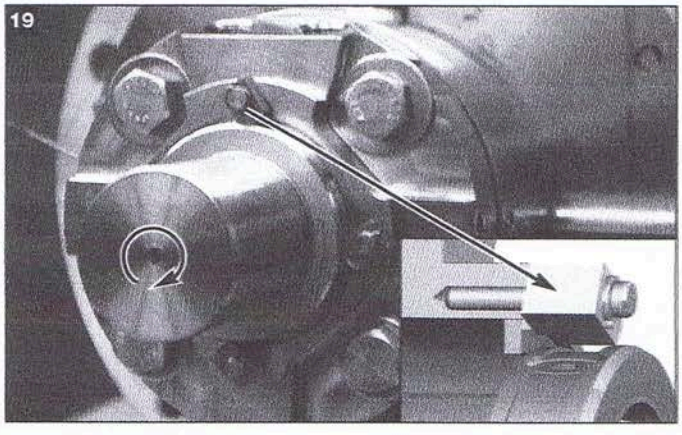

CHESTERTON.
Global Solutions, Local Service.

S20 PRESSURE TEST

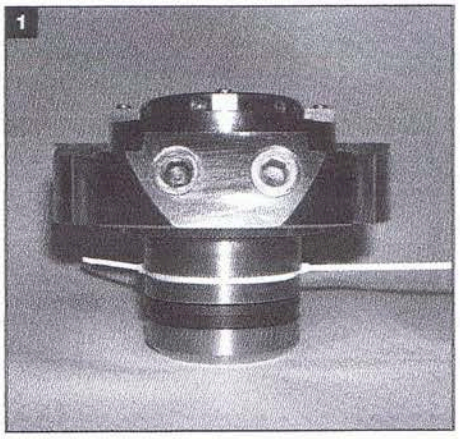

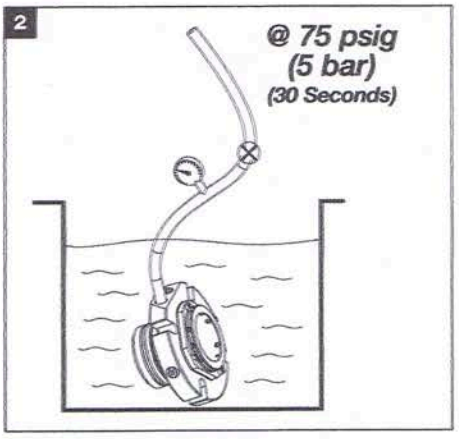

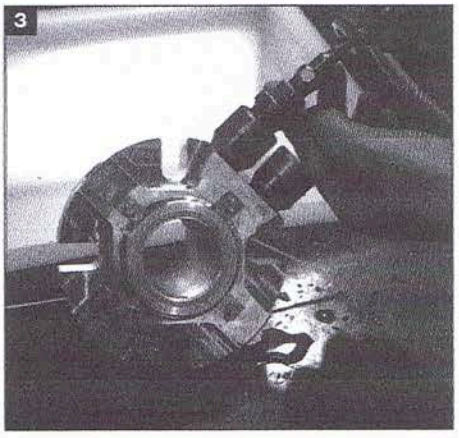

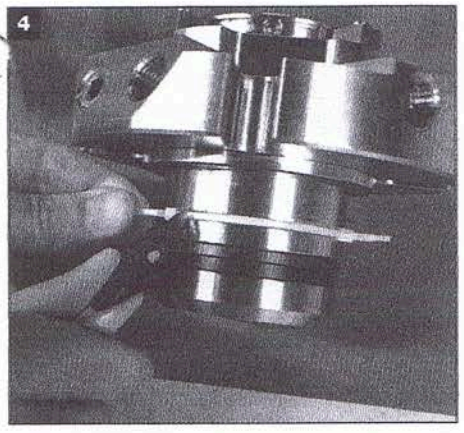

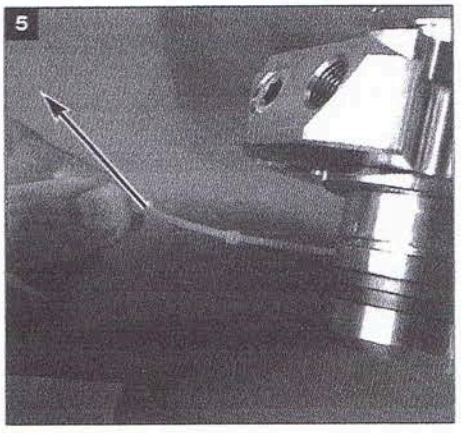

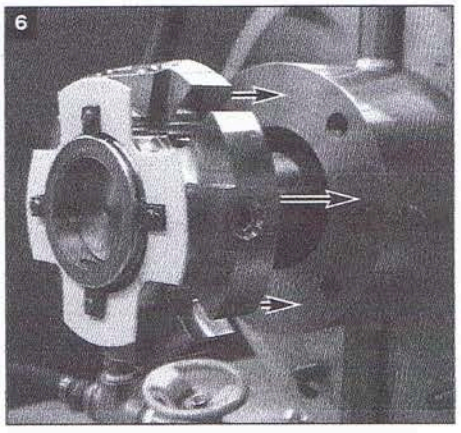

S10/S20 IMPELLER ADJUSTMENT

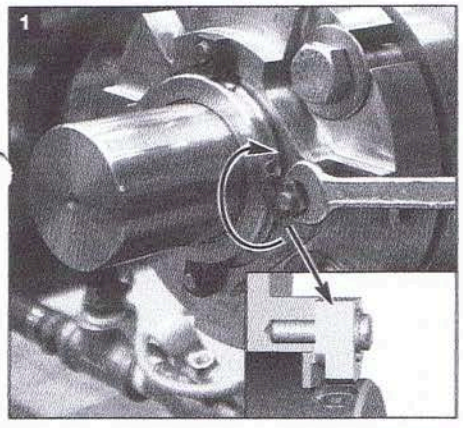

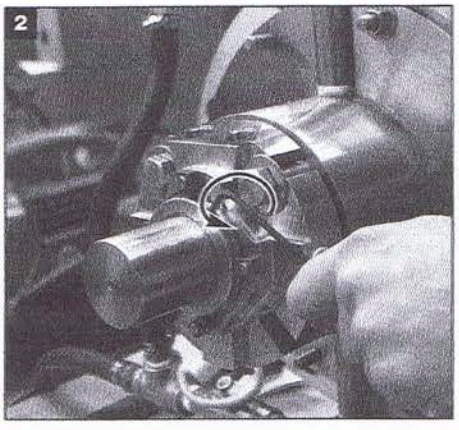

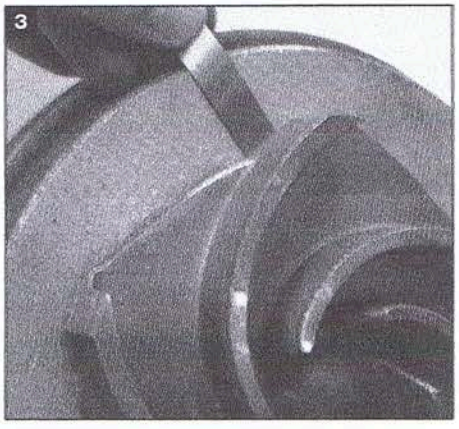

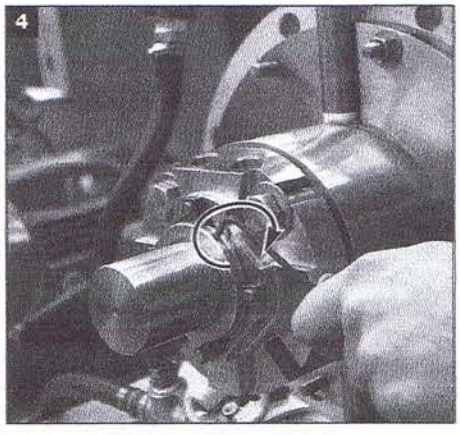

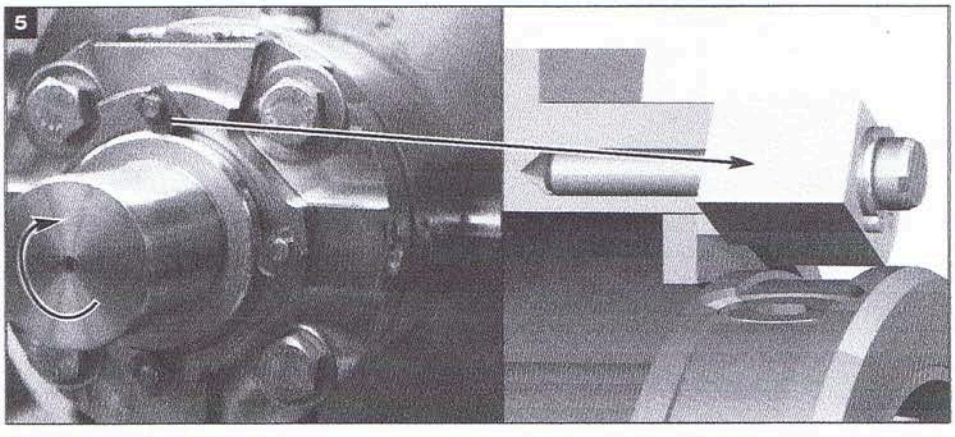

S10/S20 OVERSIZE GASKET KIT ASSEMBLY INSTRUCTIONS

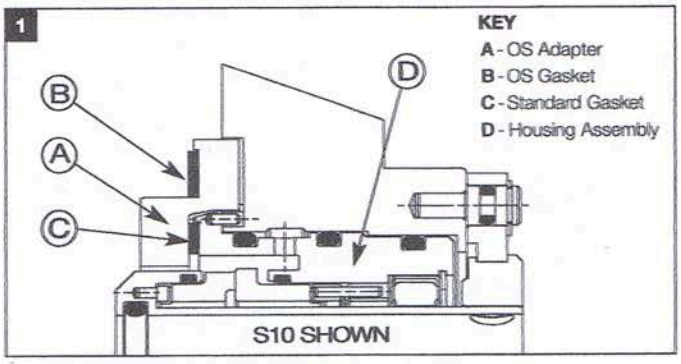

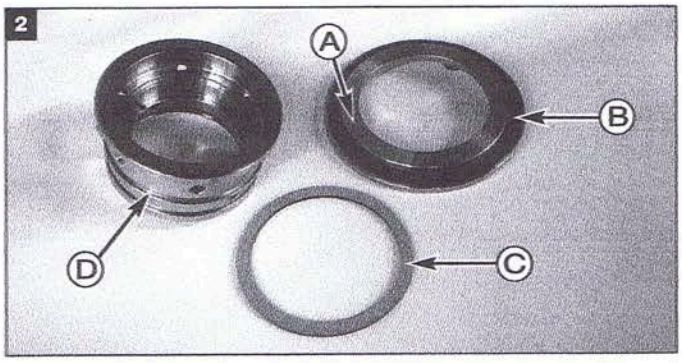

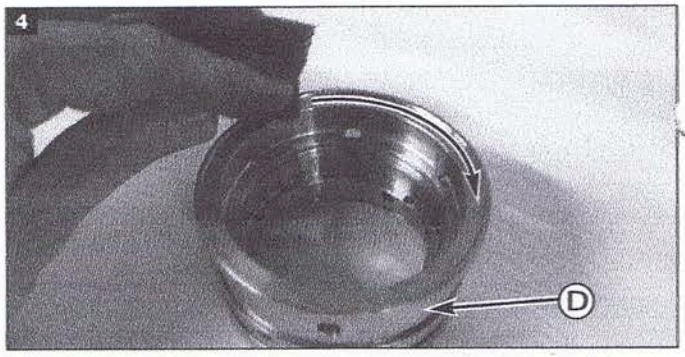

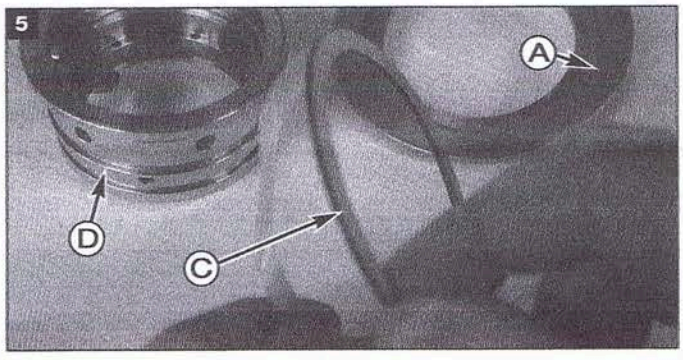

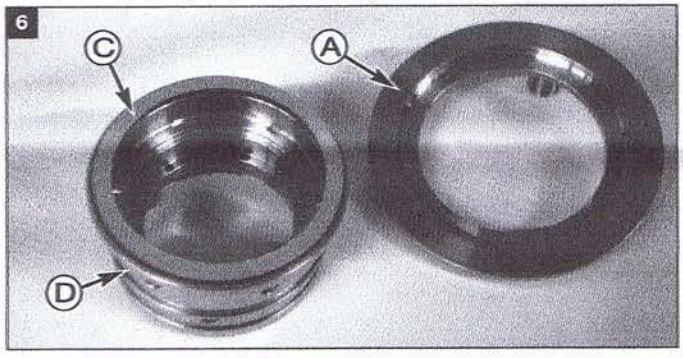

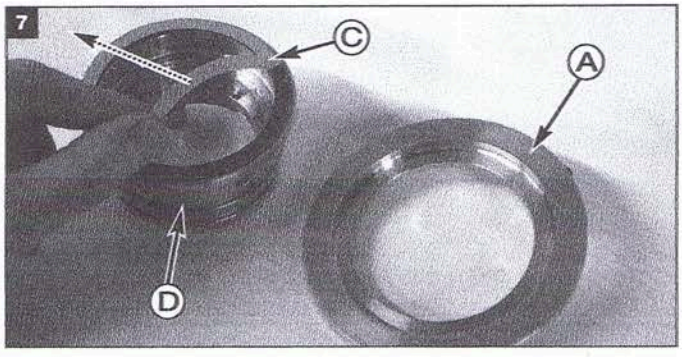

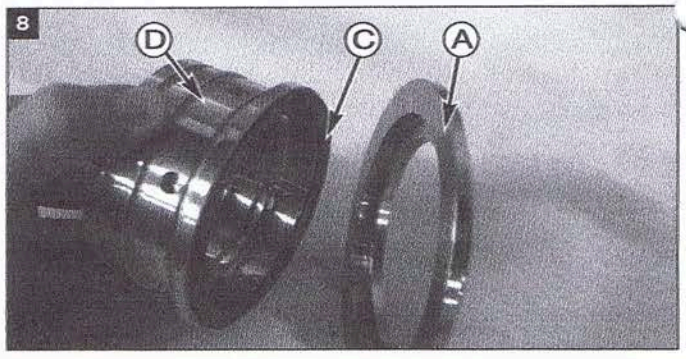

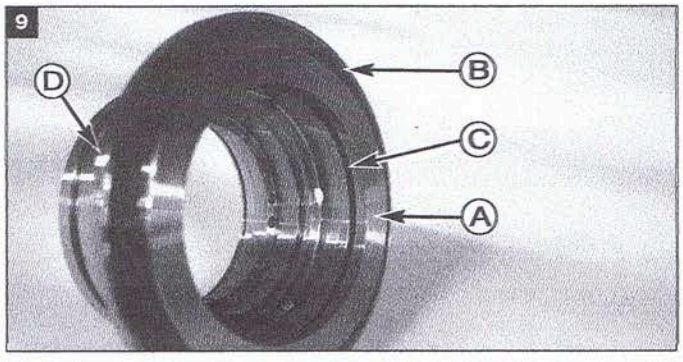

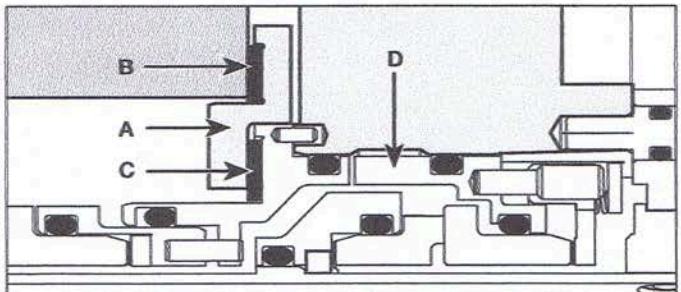

S10/S20 Oversized Adapter Installation
(S20 shown)

CHESTERTON
Global Solutions, Local Service.

S10 & S20 Extra Small –

Dimensional Data/Inch

SHAFT SIZE	GLAND OD	STUFFING BOX BORE		SEAL OD	S20 SB DEPTH	S10 SB DEPTH	OB LENGTH	BOLT CIRCLE BY BOLT SIZE			SLOT WIDTH	SB TO BOLT SURFACE	O-RINGS S10 AND S20 SHAFT	S10 AND S20 IB AND OB CASSETTE	S10 AND S20 ROTARY AND STATIONARY	S20 IB HOUSING	S20 ROTARY HOLDER	S10 QUENCH
A	B MAX	C MIN	C MAX	D	E MIN	E MIN	F	3/8"	G MIN 1/2"	5/8"	H	J			†			
1.000	4.10	1.63	2.01	1.57	1.88	0.51	2.05	2.88	–	–	0.44	1.20	120	133	028	029	025	133
1.125	4.10	1.75	2.04	1.69	1.88	0.51	2.05	2.88**	–	–	0.44	1.20	122	135	029	030	027	135
1.125 OS	4.50	2.63	2.94	1.69	1.82	0.51	2.05	3.71	–	–	0.44	1.20	122	135	029	030	027	135
1.250	4.10	1.88	2.27	1.83	1.88	0.51	2.05	3.13	–	–	0.44	1.20	124	138	030	031	029	137
1.375	4.40	2.00	2.33	1.94	1.88	0.51	2.05	3.14**	3.33**	–	0.57	1.20	126	139	031	032	030	139
1.375 OS	5.40	2.81	3.00	1.94	1.82	0.51	2.05	4.03	–	–	0.44	1.21	126	139	031	032	030	139

S10 & S20 Extra Small –

Dimensional Data/Metric

								10 mm	12 mm	16 mm								
25	104	41.0	51.1	39.9	48	13.0	52	73.0**	–	–	11.5	30.4	120	133	028	029	025	133
28	104	44.0	51.8	42.4	48	13.0	52	73.0	–	–	13.5	30.4	122	135	029	030	027	135
30	104	46.0	56.6	44.5	48	13.0	52	78.0	–	–	13.5	30.4	123	136	030	030	028	136
32	104	48.0	57.7	46.5	48	13.0	52	80.0	–	–	13.5	30.4	124	138	030	031	029	137
33	113	49.0	58.8	47.4	48	13.0	52	80.0	83.0**	–	15.0	30.4	125	138	031	031	029	138
35	111	51.0	59.2	49.4	48	13.0	52	82.0	83.7**	–	15.0	30.4	126	139	031	032	030	139

S10 & S20 Standard & Oversize –

Dimensional Data/Inch

SHAFT SIZE	GLAND OD	STUFFING BOX BORE		SEAL OD	S20 SB DEPTH	S10 SB DEPTH	OB LENGTH	BOLT CIRCLE BY BOLT SIZE			SLOT WIDTH	SB TO BOLT SURFACE	O-RINGS S10 AND S20 SHAFT	S10 AND S20 IB AND OB CASSETTE	S10 AND S20 ROTARY AND STATIONARY	S20 IB HOUSING	S20 ROTARY HOLDER	S10 QUENCH
A	B MAX	C MIN	C MAX	D	E MIN	E MIN	F	3/8"	G MIN 1/2"	5/8"	H	J	1 each	2 each				
1.500	4.50	2.25	2.44	2.19	1.97	0.53	2.11	3.31**	3.55**	–	0.57	1.20	128	143*	135	136	130	142*
1.625	5.00	2.38	2.70	2.31	1.97	0.53	2.11	3.49**	3.68**	–	0.57	1.20	130	145*	137	138	132	144*
1.750	5.50	2.50	2.81	2.44	1.97	0.53	2.11	3.61**	3.80**	–	0.57	1.20	132	147*	139	140	134	146*
1.750 OS	6.64	3.50	3.75	2.44	1.97	0.53	2.11	5.38	5.50	–	0.57	1.20	132	147*	139	140	134	146*
1.875	5.50	2.63	2.94	2.56	1.97	0.53	2.11	3.74**	3.93**	–	0.57	1.20	134	149*	141	142	136	148*
1.875 OS	5.99	3.56	3.81	2.56	1.97	0.53	2.11	–	5.00	–	0.57	1.20	134	149*	141	142	136	148*
2.000	5.50	2.75	3.19	2.69	1.97	0.53	2.11	3.99	4.12**	–	0.57	1.20	136	150*	143	144	138	149*
2.125	6.00	2.88	3.44	2.81	1.97	0.53	2.11	4.24	4.37	4.49**	0.69	1.20	138	152	145	146	140	151
2.125 OS	6.99	3.88	4.25	2.81	1.66	0.00	2.42	–	4.49	5.25	0.69	1.51	138	152	145	146	140	151
2.250	6.00	3.00	3.56	2.94	1.97	0.53	2.11	4.36	4.49	4.61**	0.69	1.20	140	152	147	148	142	151
2.375	6.00	3.13	3.62	3.06	1.97	0.53	2.11	4.42	4.55	4.68**	0.69	1.20	142	153	149	150	144	152
2.500	6.50	3.25	3.81	3.19	1.97	0.53	2.11	4.61	4.74	4.86**	0.69	1.20	144	153	151	151	146	152
2.500 OS	7.77	4.50	4.75	3.19	1.97	0.53	2.11	–	6.63	6.75**	0.69	1.20	144	153	151	151	146	152
2.625	6.50	3.38	3.94	3.31	1.97	0.53	2.11	4.86	4.99	5.11	0.69	1.20	146	154	5-557	5-557	148	153
2.625 OS	6.99	4.55	4.88	3.31	1.97	0.53	2.11	–	5.88	6.00	0.69	1.20	146	154	5-557	5-557	148	153

S10 & S20 Standard & Oversize –

Dimensional Data/Metric

								10 mm	12 mm	16 mm								
38	114	57.2	62.0	55.6	50	13.5	54	84.0	89.9**	–	13.5	30.4	128	143*	135	136	130	142*
40	127	60.0	68.3	57.5	50	13.5	54	89.2	91.7**	–	13.5	30.4	129	144*	136	137	131	143*
43	127	63.0	68.8	60.5	50	13.5	54	91.9	94.7**	–	13.5	30.4	131	146*	138	139	133	145*
45	140	65.0	73.4	62.5	50	13.5	54	94.2	96.8**	–	13.5	30.4	133	147*	140	141	135	146*
48	140	68.0	73.8	65.5	50	13.5	54	97.0	99.8**	–	13.5	30.4	134	149*	142	143	136	148*
50	140	70.0	78.5	67.5	50	13.5	54	99.3	101.9**	–	17.5	30.4	136	150*	143	144	138	149*
53	153	75.0	83.6	72.5	50	13.5	54	104.4	106.4**	112.0**	17.5	30.4	137	152	146	147	141	151
55	153	75.0	83.6	72.5	50	13.5	54	104.4	106.4**	112.0**	17.5	30.4	139	152	146	147	141	151
60	153	80.0	92.2	77.8	50	13.5	54	112.8	114.8	118.9**	17.5	30.4	142	153	149	150	144	152
65	164	88.9	100.1	84.2	50	13.5	54	124.0	126.0	129.8	17.5	30.4	145	154	5-557	5-557	148	153

* Use next size larger for Style 76 O-rings.
** Minimum Bolt Circle requires D Washers.
† The S10 uses a quantity of 2 o-rings and the S20 uses a quantity of 4 o-rings.

Consult Chesterton Applications Engineering for further information.

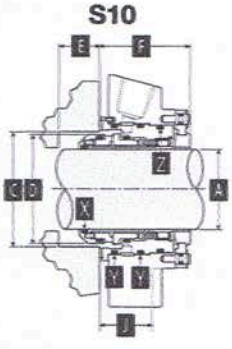

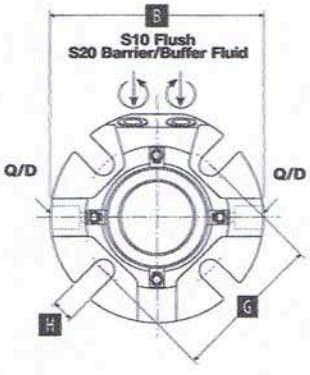

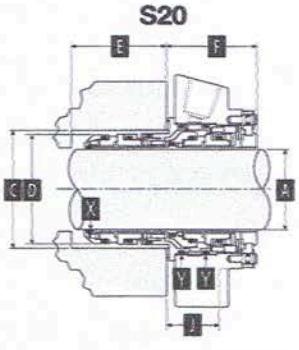

S10 & S20 Large –

Dimensional Data/Inch

SHAFT SIZE	GLAND OD	STUFFING BOX BORE		SEAL OD	S20 SB DEPTH	S10 SB DEPTH	OB LENGTH	BOLT CIRCLE BY BOLT SIZE			SLOT WIDTH	SB TO BOLT SURFACE	O-RINGS					
													S10 AND S20			S20		S10
													SHAFT	IB AND OB CASSETTE	ROTARY AND STATIONARY	IB HOUSING	ROTARY HOLDER	QUENCH
A	B MAX	C MIN	C MAX	D	E MIN	E MIN	F	3/8"	G MIN 1/2"	5/8"	H	J	1 each	2 each	†			
2.750	7.70	3.75	4.36	3.67	2.50	0.83	2.50	5.42	5.55**	–	0.69	1.60	232	242	237	238	234	241
2.875	7.83	3.88	4.50	3.79	2.50	0.83	2.50	5.50	5.62**	–	0.69	1.60	233	243	238	239	235	242
3.000	7.94	4.00	4.69	3.91	2.50	0.83	2.50	5.65	5.77**	–	0.69	1.60	234	244	239	240	236	243
3.125	7.99	4.13	4.80	4.04	2.50	0.83	2.50	5.80	5.92**	–	0.69	1.60	235	245	240	240	237	244
3.250	8.19	4.25	4.94	4.16	2.50	0.83	2.50	5.93	6.05**	–	0.69	1.60	236	246	241	242	238	245
3.375	8.30	4.38	5.05	4.29	2.50	0.83	2.50	6.02	6.14**	6.27	0.69	1.60	237	247	242	243	239	246
3.500	8.44	4.50	5.19	4.41	2.50	0.83	2.50	6.18	6.31**	6.43	0.81	1.60	238	248	243	244	240	247
3.625	8.49	4.63	5.30	4.54	2.50	0.83	2.50	6.31	6.44**	6.56	0.81	1.60	239	249	244	245	241	248
3.750	8.71	4.75	5.39	4.66	2.50	0.83	2.50	6.38	6.51**	6.63	0.81	1.60	241	250	245	246	242	249
3.875	8.84	4.88	5.51	4.79	2.50	0.83	2.50	6.52	6.54**	6.77	0.81	1.60	241	251	246	247	243	250
4.000	8.96	5.00	5.69	4.91	2.50	0.83	2.50	6.66	6.78**	6.91	0.81	1.60	242	252	247	248	244	251
4.125	8.99	5.13	5.80	5.04	2.50	0.83	2.50	6.79	6.90**	7.03	0.81	1.60	243	253	248	249	245	252
4.250	8.99	5.25	5.94	5.16	2.50	0.83	2.50	6.91	7.04**	7.16	0.81	1.60	244	254	249	250	246	253
4.375	9.33	5.38	6.06	5.29	2.50	0.83	2.50	7.03	7.15**	7.29	0.81	1.60	245	255	250	251	247	254
4.500	9.49	5.50	6.19	5.41	2.50	0.83	2.50	7.18	7.30**	7.43	0.81	1.60	246	256	251	252	248	255
4.625	9.49	5.63	6.31	5.40	2.50	0.83	2.50	7.28	7.40**	7.53	0.81	1.60	247	257	252	253	249	256
4.750	10.49	5.75	6.47	5.66	2.50	0.83	2.50	7.40	7.53**	7.75	0.81	1.60	248	257	253	254	250	256

S10 & S20 Large –

Dimensional Data/Metric

								10 mm	12 mm	16 mm								
70	196	95	110	93	63	21	63	137	141**	–	17	41	232	242	237	238	234	241
75	202	104	119	99	63	21	63	143	147**	–	17	41	234	244	239	239	236	243
80	203	109	122	103	63	21	63	150	154**	–	17	41	236	245	240	241	238	244
85	211	114	128	109	63	21	63	152	156**	161	20	41	237	247	242	243	239	246
90	214	119	132	113	63	21	63	160	164	168	20	41	239	248	244	244	240	247
95	221	124	137	118	63	21	63	161	165**	170	20	41	240	250	245	246	242	249
100	228	129	144	125	63	21	63	168	172**	177	20	41	242	252	247	248	244	251
110	237	137	154	134	63	21	63	178	182**	186	20	41	245	255	250	251	247	254
120	266	146	164	144	63	21	63	187	191**	196	20	41	248	257	253	254	250	256

** Minimum Bolt Circle requires D Washers.
† The S10 uses a quantity of 2 o-rings and the S20 uses a quantity of 4 o-rings. Consult Chesterton Applications Engineering for further information.

STANDARD MATERIALS***

All Metal Parts: 316 SS
Springs: Hastelloy C*
Rotary Face: Carbon, Tungsten Carbide, or Silicon Carbide
Stationary Face: Tungsten Carbide or Silicon Carbide
Elastomers: Fluorocarbon, EPR, ChemLast, AFLAS**
PTFE Encapsulated

* Haynes International, Inc. Registered Trademark.
** Asahi Glass Company Ltd. Registered Trademark.
*** Other materials available upon request.

OPERATING LIMITS

Speed: 0 to 5000 FPM (25 mps)
Process Pressure: 28" Hg Vacuum to 450 psig (31 bar g)
Barrier Pressure (S20): To 450 psig (31 bar g)
IB Seal Pressure Differential: 250 psig (17 bar g)
Temperature:

300°F	(150°C)	Ethylene Propylene
400°F	(205°C)	Fluorocarbon, AFLAS
500°F	(256°C)	Perfluoroelastomer

All S10 Seals come assembled with EPR Quench O-rings.
All S10 and S20 Seals come assembled with AFLAS –006 Centering Pad O-rings.
For higher pressure and temperature applications, consult the factory.

CHESTERTON.
Global Solutions, Local Service.
860 Salem Street
Groveland, Massachusetts 01834 USA
Telephone: 781-438-7000
Fax: 978-469-6528
www.chesterton.com

Chesterton ISO certificates available on www.chesterton.com/corporate/iso

© A.W. Chesterton Company, 2008. All rights reserved.
® Registered trademark owned and licensed by the A.W. Chesterton Company in USA and other countries.

CHESTERTON FLOW GUARDIAN™ DP50 DUAL FLOWMETER INSTALLATION INSTRUCTIONS

GENERAL

The function of the FLOW GUARDIAN Dual DP50 (Item # 199803 compression fitting, 199806 barb fitting) is to accurately control the flow rate and pressure of the seal barrier fluid. The unit consists of two variable area flowmeters, one for the measurement of the barrier fluid liquid supply into the mechanical seal, and another one measuring the return (discharge) flow from the same seal.

The unit is furnished with a pressure gauge to indicate barrier fluid return discharge pressure.

SPECIFICATIONS

Flow Rate

Flow rate range to be
2 – 50 GPH (0,1 - 3 Liters/min)

Pressure Regulating Valve (DP50)

A pressure-regulating valve is provided to set the barrier fluid pressure for the mechanical seal or packing. The pressure regulating control knob is located on the right hand side of the Flowmeter.

(Please view Figure 1 page 4 for pressure regulating control knob location)

Pressure Gauge

The pressure gauge furnished on the FLOW GUARDIAN DP50 Flowmeters is constructed of 316 SS, oil filled, with 0 – 145 PSIG and 0 – 10 bar g compound markings.

Material of Construction	
Flowmeter Tubes:	POLYSULFONE (PSU)
Body of Unit:	POLYOXYMETHYLENE (POM)
O-rings:	FLUOROCARBON (FKM)
Pressure Gauge:	Oil filled with 316SS Stainless Steel Case and Wetted Parts, 1/4" – NPT Bronze fitting
Pressure Regulating Valve:	AISI 316
Flow Rate Regulating Valve:	AISI 316
Clean-out Plugs:	AISI 320
3/8" Tube Fittings (for compression connections) or optional Barb Fittings:	AISI 316
Mounting Bracket:	AISI 316

Temperature / Pressure Limits

Maximum Temperature:
212 °F (100 °C)
Maximum Pressure:
160 PSIG (11 bar g)

Optional Low Flow Sensor

Two adjustable low flow alarm sensors are available as options. One sensor (Item # 199809) operates on 20-250 AC/DC volts with a switching frequency of 25 Hz AC / 100 Hz DC and the second (Item # 199810) sensor option operates on 10 – 55 DC volts with a switching frequency of 100 Hz.

Qualification Test

All Chesterton FLOW GUARDIAN DUAL flowmeters are tested for leak tightness.

INSTALLATION PROCEDURE

Typical installation illustrations of the CHESTERTON FLOW GUARDIAN™ DP50 Dual Flowmeter are represented on page 4 of these instructions. The DP50 is utilized for double mechanical seal or packing gland applications.

The FLOW GUARDIAN has a mounting plate for simplified installation. The mounting bracket bolt slots accommodate bolt sizes from 1/2" (12 mm) to 7/8" (22 mm). The FLOW GUARDIAN **must** be mounted vertically to operate accurately.

(See Figure 2 on page 4 for mounting plate dimensions.)

Hose Connections for FLOW GUARDIAN DP50

NOTE:
Hoses and clamps not included.

For compression fitting models use a 3/8" female compression coupling to make connection to all supply and return lines.

Hose connections are made by using hose with a 3/8" (10 mm) inside diameter. The hose must be textile reinforced. It must withstand at least 240 PSIG (16 bar g) pressure. Attach the hoses using hoseclamps over the hose barb fittings. Leave the hose long enough to prevent kinks and to avoid sharp turns.

Hose connection instructions are located on the bottom of the mounting plate.

1. **IN**
   Barrier fluid feed inlet
2. **TO SEAL**
   Barrier fluid feed to seal
3. **FROM SEAL**
   Barrier fluid from seal to pressurizing valve
4. **OUT**
   Barrier fluid outlet to effluent channel or re-circulation.

Optional Flow Sensor Installation and Adjustment

NOTE:
Sensor range (0,5 –1,25 Liters/min)

Install the sensor in the slot behind the indicating tube that is located in the back of the FLOW GUARDIAN. Two slots are available for low flow sensors, one for flow of barrier fluid liquid supply and another for barrier fluid return.

(See Figure 1 on page 4)

1. The sensor has two lock nuts. Move one of the nuts to the flat end of the sensor.
2. Move the other nut to approximately 1/2" (10 mm) distance from the first nut.
3. Insert the sensor into the sensor slot located at the back of the FLOW GUARDIAN by pivoting it into place at the top opening of the sensor slot (widened). When the sensor is in place, it moves freely up and down in the sensor slot.
4. Locate the sensor in the desired position and tighten the sensor clockwise against the bottom of the sensor slot. To secure the sensor into position tighten the second locking nut by hand until the sensor is secure.

NOTE:
If you want to prevent the tampering of the FLOW GUARDIAN and/or make the FLOW GUARDIAN adjustable using a hand tool, remove the black knob. Unscrew the knob lock screw and remove the hand knob. When the knob is removed, screw the delivered M8 lock nut onto the valve.

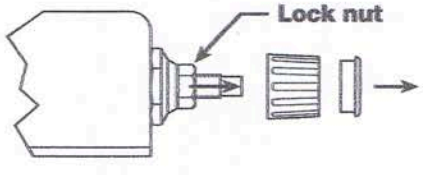

LOW FLOW SENSOR ADJUSTMENT

This is done by adjusting the position of the sensor. When the float in the meter tube falls slightly below the midpoint of the sensor, the sensor is activated.

To make adjustment to the alarm setting:

1. Adjust the water flow to the alarm value. (Use red arrow sliding indicator as a guide)
2. Move the sensor up until the alarm goes off.
3. Retighten the sensor into position.

HIGH FLOW SENSOR ADJUSTMENT

This is done by adjusting the position of the sensor. When the float in the meter tube falls slightly below the midpoint of the sensor, the sensor is activated. Repeat the steps above (Low Flow sensor Adjustment) for improved accuracy of alarm.

The FLOW GUARDIAN can have both low flow and high flow sensors. Two sensors are needed to maintain high and low flow conditions.

Flow Adjustment

(FLOW GUARDIAN DP50 with pressurizing valve)

When you use a FLOW GUARDIAN DP50 unit, you must adjust both the flow rate and pressure as follows:

1. Thread the quick cleaning plunger rods into the top of the FLOW GUARDIAN.
2. Fully open both valves.
3. Push the quick clean plunger down until flow rate is desired.
4. Adjust the flow control valve until float begins to move slightly at desired level.
5. Adjust the pressure control valve that is located behind the flow control valve until the required pressure is set.

NOTE:
The adjusting of the pressurizing valve changes the flow rate. Therefore, repeat the steps until both the desired flow rate and the pressure value are reached.

Quick Cleaning

Over time the meter tube may discolor due to algae, silt, fiber, and other contamination. This may make it difficult to read the flow rate. The FLOW GUARDIAN has a built in quick cleaner plunger. Quick cleaner plunger operates as follows:

1. When you are cleaning, hold the FLOW GUARDIAN firmly.
2. Locate the cleaning plunger rod at the top of the FLOW GUARDIAN.
3. Push the cleaning rod plunger slowly downwards to avoid pressure variations to the seal.

   Note: If the FLOW GUARDIAN has a flow alarm, the cleaning process may cause a false alarm.

4. Let pressure push the plunger slowly upwards. If required use your hand to raise the plunger back to the top.

Metering Components and Valve

If quick cleaning with plunger does not resolve problems in flow measuring instruments, problems may be caused by foreign objects or contaminant build up in the metering components. If this occurs the metering components must be disassembled and inspected.

Metering component disassembly:

1. Close the water feed to the FLOW GUARDIAN unit.
2. Close the FLOW GUARDIAN flow control valve completely.
3. If the quick cleaner plunger is still in place, remove it.
4. Open and remove the plunger plug using a 14 mm metric wrench.
5. Screw on the quick cleaning rod. Push it halfway into the metering tube.
6. Pull out the quick cleaner and simultaneously push the metering tube out of the meter body using your thumb.
7. Gently lift out the float using a non-metallic device such as a toothpick.
8. Clean the feed inlet using a cloth wrapped around a toothpick or a small fiber brush.
9. Separate parts should be soaked in soap or mild solvent based solution. Brush them clean using a cloth.
10. Reassemble the metering components in the reverse order.

Usually, foreign material in the valve causes a valve problem. When you open the valve and then set the flow back to normal, the foreign material is removed. However, if this does not resolve the problem, you must disassemble the valve to determine the cause of the problem.

Valve Disassembly:

1. Close the water feed to the FLOW GUARDIAN unit.
2. The seal must be un-pressurized, shut down the pump.
3. Unscrew the flow control valve assembly using a 22 mm metric wrench.
4. Clean the meter inlet and valve area using a cloth wrapped around a toothpick or fiber brush.
5. If the valve needle O-ring leaks, remove the adjustment knob and screw the needle clockwise through the valve body. Replacement O-ring can be found in the FLOW GUARDIAN flowmeter repair kit. (Item # 199811)
6. Reassemble the valve in the reverse order.

O-RING SEALS

Remove the broken or worn out O-rings carefully to avoid damage to the sealing surfaces. Best results are obtained by using only fingers or toothpicks. Never use metallic tools. Replacement O-rings can be found in the FLOW GUARDIAN repair kit.

When you install new O-rings, remember the following:

1. Do not damage the O-ring when you move it over the threads. A short smooth pipe can be placed over the threads to protect O-ring.
2. Do not leave the O-ring on a spiral or twisted.
3. Before installation, lightly lubricate the new O-rings using silicone lubricant.
4. Use only FKM (Fluorocarbon) O-rings.

General Operation and Maintenance

The FLOW GUARDIAN does not require regular maintenance. The FLOW GUARDIAN will remain operational for extended periods. Occasional metering tube cleaning is required using the quick cleaner plunger.

Only factory authorized spare parts should be used in the FLOW GUARDIAN. Do not replace existing parts with third party components (for example, connectors). Factory O-rings should be used for they are critical components to the FLOW GUARDIAN measurement and operation.

Do not leave water in the metering tube during shutdown in cold conditions. Freezing of the water left in the metering tube will break or weaken the tube. Freezing is avoided by purging the meter or fluid and by isolating it from the process.

Do not over-tighten the FLOW GUARDIAN components. Proper sealing on the instrument does not require large tightening torque. If a leak develops, replace the O-ring seal (when necessary) rather than tightening the connections more. The recommended tightening torque is 7-10 Nm (5.16-7.37 ftlbs) for all threaded connections.

FIGURE 1 - PARTS LIST

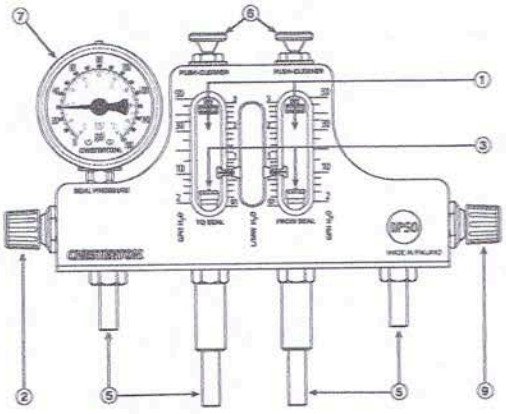

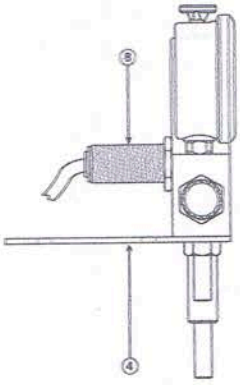

KEY

1 – Dual Flow Meter Tubes
2 – Flow Control Valve
3 – Floats
4 – Mounting Bracket
5 – 3/8 in. Compression Fittings (shown) or Hose Barb Fittings
6 – Quick Clean Plunger
7 – Pressure Gauge
8 – Optional Low Flow Sensor
9 – Pressure Control Valve

FIGURE 2 - DIMENSIONAL REFERENCE

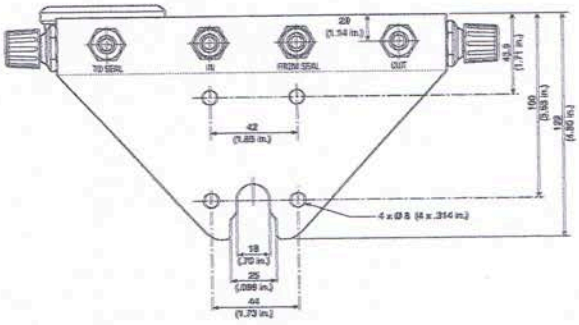

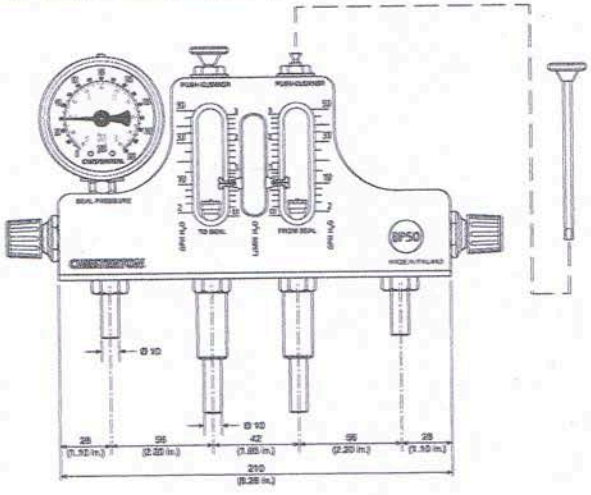

FIGURE 3 - TYPICAL INSTALLATION *in a Double Mechanical Seal Application*

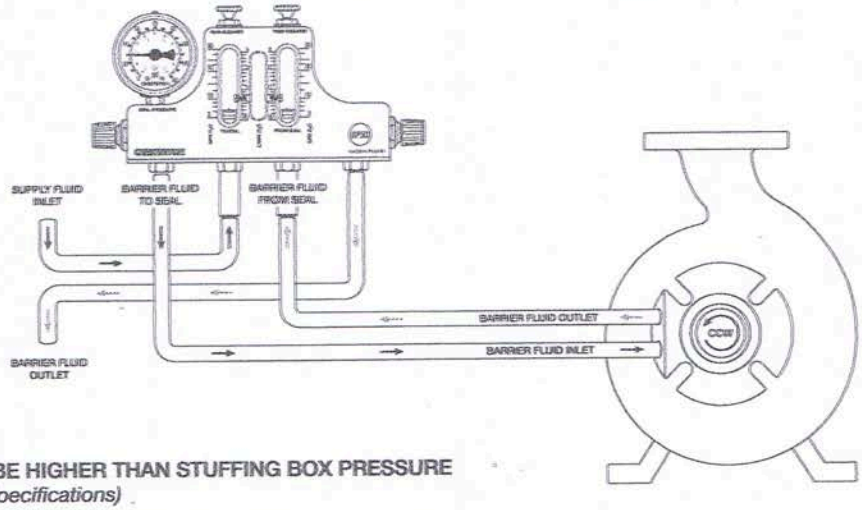

INSTALLATION NOTES:

BARRIER PRESSURE TO BE HIGHER THAN STUFFING BOX PRESSURE

(Consult Mechanical Seal Specifications)

ISO Certifications available at www.chesterton.com/corporate/iso

CHESTERTON.

860 Salem Street
Groveland, MA 01834 USA
Telephone: 781-438-7000 Fax: 978-469-6528
www.chesterton.com

© A.W. Chesterton Company, 2006. All rights reserved.
® Registered trademark owned and licensed by A.W. Chesterton Company in USA and other countries.

FORM NO. 199811

PRINTED IN USA 10/06

CHESTERTON
Global Solutions, Local Service.

CHESTERTON International GmbH · Am Lenzenfleck 23 · 85737 Ismaning

- Gleitringdichtungen
- Packungen – Flachdichtungen
- Hydraulik-Dichtungen
- Technische Wartungsprodukte

VISCO JET Rührsysteme GmbH
Frau Ziel-Gantert
Daimlerstrasse 1

D-79761 Waldshut-Tiengen

Bescheinigung der FDA-Konformität zu Item Nummer:

194629 S20 75M SA SSC SSC CB SSC S EP
195829 S20 75M CAS SSC SSC CB SSC S EP

Sehr geehrte Frau Ziel-Gantert,

aufgrund der gebotenen Eile bestätigen wir Ihnen hiermit FDA-Konformität zu unseren Artikeln 194629 S20 75M SA SSC SSC CB SSC S EP und 195829 S20 75M CAS SSC SSC CB SSC S EP

Die Dichtungen sind mit FDA-konformen Material und einem FDA-konformen O-Ring ausgestattet und an Sie versendet worden.

Das entsprechende Zertifikat werden wir bei unserem Werk in USA neu anfordern und in Kürze an Sie weitergeben.

Gerne stehen wir für weitere Fragen zu Ihrer Verfügung.

CHESTERTON
International GmbH
Am Lenzenfleck 23
85737 Ismaning
Tel.: 089-99 65 46-0 · Fax: 99 65 46-60

i.A. Ulrich Hartmann
Customer Service Team

Angst+Pfister

Angst+Pfister Group
Group Engineering
Thurgauerstrasse 66
Postfach
CH-8052 Zürich
Email: ch@angst-pfister.com
Internet: www.angst-pfister.com

Inotec GmbH
Waldshuter Strasse 25
79761 Waldshut-Tiengen

DECLARATION OF CONFORMITY

in accordance with
DIN EN ISO/IEC 17050

Customer No.: 261540

Date: 26.08.2010
Phone: +41 44 306 6190
Issuer: Gloor Franziska
Initials: GLFR

Declaration subject:

Item description:

HITEC Präzisions-O-Ring EPDM75.5/KW75F

Item no.:

Diverse

Job no.:

Quantity:

Country of origin:

Italy

Your purchase order:

Diverse

The product described above meets the requirements stipulated in the following guidelines/standards:

Herewith we confirm that the formulation is in compliance with the appropriate food packaging material regulations (21 CFR §177.2600 – Rubber articles intended for repeated use) and therefore may be used in contact with food in the United States of America.

Additional information:

Angst + Pfister Group Engineering

Zurich, 26.08.2010

Daniel Derrer

Hugo Keller
Senior Engineer

(Place and date of issuance)

(Name and signature or equivalent authentication of authorized persons)

Original document delivery (for internal use only):
☐ to customer, pdf file ☐ to customer, with product shipment ☐ back to issuer, pdf file ☐ other (please specify separately)