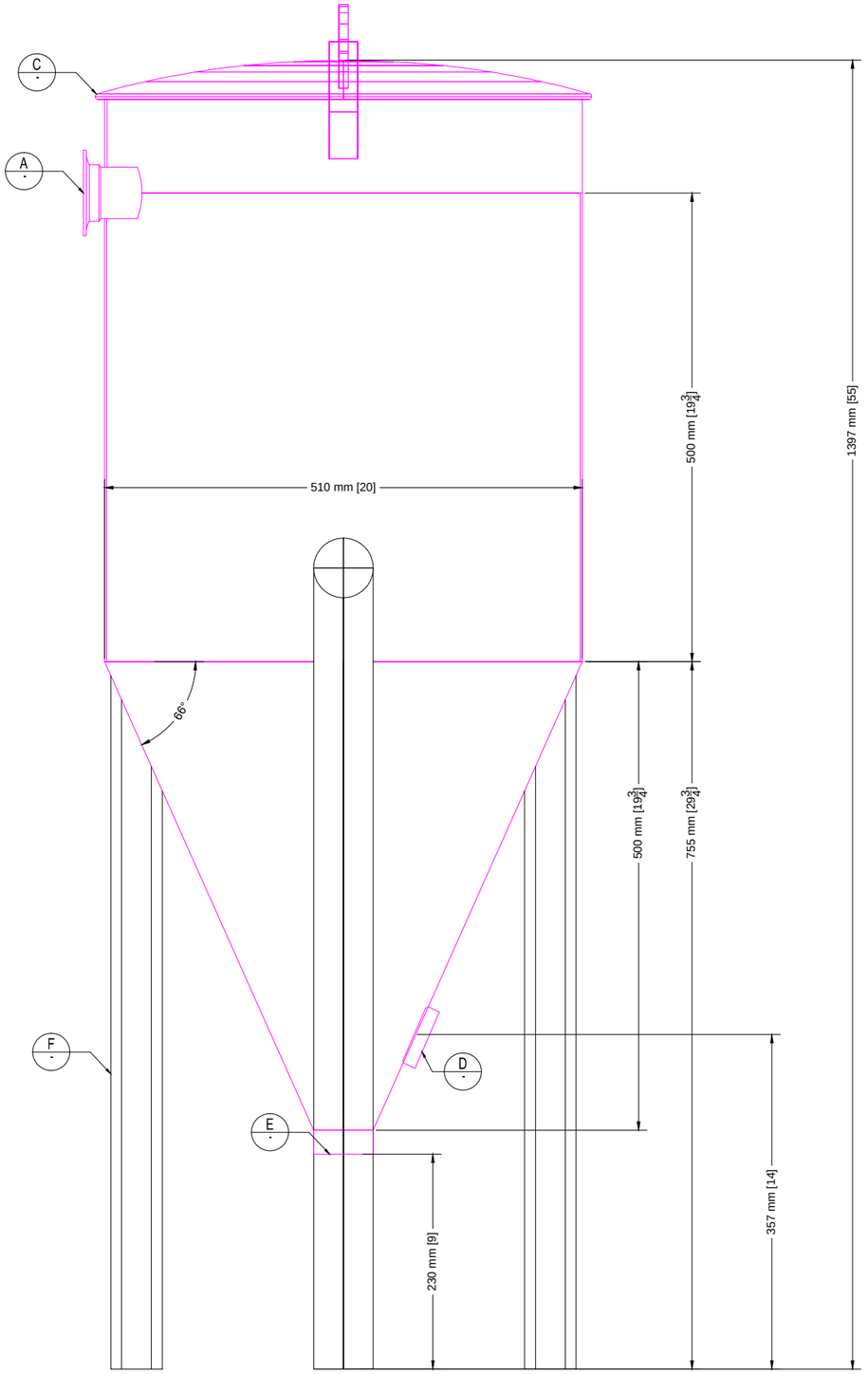

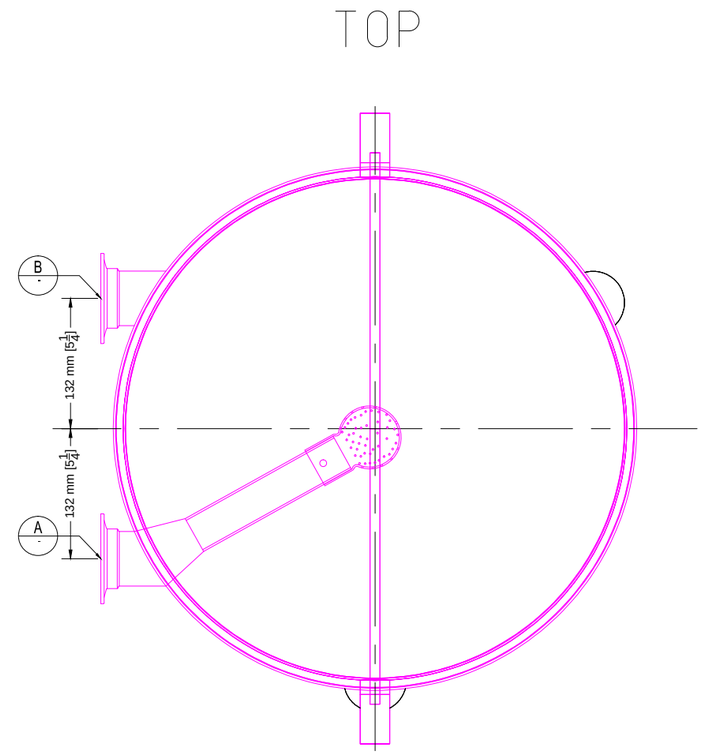

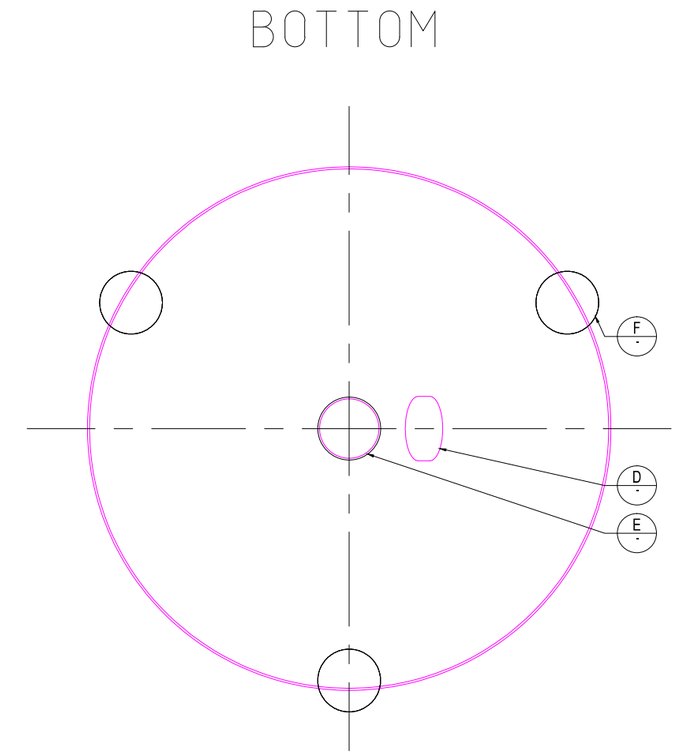

ITEM	SIZE	QTY.	DESCRIPTION
A	2 1/2"	1	Tri Clamp CIP-Ball Connection Including CIP Ball
B	2 1/2"	1	Tri Clamp Product Inlet
C	500	1	Manway / Supplier: Zimmerlin, pressure less dome cover, size NW 500
D	–	1	Connection for Level Sensor (supplied by Processtec)
E	2 1/2"	1	Product Outlet, welding connection
F	2 1/2"	3	legs, closed at upper end
G			
H			
I			
J			
K			
L			
M			
N			
O			
P			
Q			
R			
S			

GENERAL NOTES:
1. ALL PRODUCT CONTACT MATERIAL TO BE 304 SS UNLESS NOTED OTHERWISE.
2. ALL SHEATHING PENETRATIONS TO BE WELDED & WATERTIGHT.
3. SIDEWALL SHEATHING TO BE WELDED CONSTRUCTION WITH ONE EXPANSION JOINT.
4. FOR CIP CLEANING, THE MANHOLE DOOR MUST BE OPEN. USE THE CIP INTERLOCK W/ LOUVERED DOOR IN PLACE.

THIS DRAWING IS ONLY FOR QUOTATION

INTERNAL FINISH SPECIFICATION:	
MATERIAL:	#4 FINISH
WELDS:	180 GRIT
EXTERNAL FINISH SPECIFICATION:	
MATERIAL:	2B MILL FINISH (NOT SCRATCH FREE)
WELDS:	CLEANED ONLY TO REMOVE DISCOLORATION
SKIRT AREA FINISH SPECIFICATION:	
MATERIAL:	2B MILL FINISH (NOT SCRATCH FREE)
WELDS:	CLEANED ONLY TO REMOVE DISCOLORATION
TESTING PRESSURE:	
VESSEL: N/A	JACKET: N/A

PROJECT NO	LVL	REVISION DESCRIPTION	BY	DATE

THIS DRAWING INCLUDING THE DESIGN AND PRINCIPLES OF CONSTRUCTION DISCLOSED IS THE PROPERTY OF The COSTUMER, AND IS SUBMITTED WITH THE UNDERSTANDING THAT IT IS NOT TO BE REPRODUCED NOR COPIED IN WHOLE OR IN PART NOR LOANED OR OTHERWISE COMMUNICATED TO ANY THIRD PARTY NOR USED IN ANY MANNER DETRIMENTAL TO THE INTERESTS OF KRAFT FOODS INC., WITHOUT ITS EXPRESS CONSENT. ACCEPTANCE OF THIS DRAWING WILL BE CONSTRUED AS AN AGREEMENT TO THE ABOVE.

PROCESSTEC
we are connecting the dots
P.O. Box 4003
Visalia, CA 93278
Phone: (559) 429 4227
Fax: (559) 429 4228
www.processtec.com

COSTUMER

Fruit Blending Tank
30 gal

PROJECT TITLE

DRAWING TITLE

PAPER SIZE

MATERIAL

FACILITY | NEXT ASSEMBLY | SCALE | CAD NUMBER

DRAWN DATE	DRAWN BY	CHECKED BY	APPD BY	PROJECT NO.	PART NUMBER	DRAWING NUMBER	REV. LVL
26. Sept. 2012	Chr. Beuchat						

SHT __ OF __

FILE: C:\Local Cloud\Shared\AUTOCAD_DWG\Safeway Commerce (6)\Fruit Blending Skid\Fruit BlendingTank V0.dwg
PRINTDATE: 2012-12-20, 12:49 pm – BY: oduerig