D BEDIENUNGSANLEITUNG
GB OPERATING INSTRUCTIONS
F INSTRUCTIONS DE SERVICE
I ISTRUZIONI D'USO
E MANUAL DE INSTRUCCIONES

VISCO JET®
Rührsysteme GmbH

D	Rührwerk Typ	
GB	Agitator type	VJ350.030
F	Type d'agitateur	
I	Modello miscelatore	
E	Mezclador tipo	
D	Kunde	
GB	Customer	PROCESSTEC Inc.
F	Client	933 W. Hemlock Ave
I	Cliente	P.O. Box 4003
E	Cliente	US-CA 93278 Visalia
D	Kunden Bestellnummer	
GB	Customer purchase order no	PO-7.3-A-33-280
F	Client Numéro de commande	
I	N° ordinazione cliente	
E	Nº de pedido de cliente	
D	Kunden Position	
GB	Customer position	150
F	Client position	
I	Posizione cliente	
E	Posición de cliente	
D	VISCO JET Auftrag Nr.	
GB	VISCO JET order no.	VA00002216
F	N° de commande VISCO JET	
I	N° ordine VISCO JET	
E	Nº de pedido de VISCO JET	
D	VISCO JET Artikel Nr.	
GB	VISCO JET article no.	10040957
F	Réf. d'article VISCO JET	
I	N° articolo VISCO JET	
E	Nº de articulo de VISCO JET	
D	VISCO JET Serien Nr.	
GB	VISCO JET serial no.	12567
F	N° de série VISCO JET	
I	N° serie VISCO JET	
E	Nº de serie de VISCO JET	

Druck:
Print: 25.09.2012/ GZ

VISCO JET Rührsysteme GmbH, Daimlerstr. 1, D-79761 Waldshut-Tiengen
Tel.: +49 7741 96567 0, Fax: +49 7741 96567 15
info@viscojet.com, www.viscojet.com

D INHALTSVERZEICHNIS
GB LIST OF CONTENTS
F SOMMAIRE
I INDICE
E CONTENIDO

VISCO JET®
Rührsysteme GmbH

1	D	Spezifikation
	GB	Specification
	F	Spécification
	I	Specifica
	E	Especificaciones
2	D	Zeichnung, Stückliste
	GB	Drawing, Part list
	F	Plan, Nomenclature
	I	Illustrazione, lista delle parti
	E	Dibujo, lista de piezas
3	D	Allgemeine Hinweise / Beschreibung der Wirkungsweise
	GB	General notes / Description of the mode of action
	F	Notices d'ordre général / Description du mode d'action
	I	Informazioni generali / Descrizione del funzionamento
	E	Indicaciones generales / Descripción del principio de funcionamiento
4	D	Betriebsanweisung / Störungen und Abhilfen / Schraubenanzugsmomente / Wellenwechsel (optional)
	GB	Operating instructions / Failures and remedies / Tightening torques / Changing the shaft (optional)
	F	Instructions de service / Dysfonctionnements et remèdes / Couples de serrage des vis / Remplacement de l'arbre (optional)
	I	Istruzioni d'uso / Anomalie e rimedi / Coppia di serraggio di viti / Supplemento sostituzione della frusta (optional)
	E	Instrucciones de servicio / Fallos y soluciones / Pares de apriete de tornillos / Hoja anexa Cambio del árbol (optional)
5	D	Unterlagen Rührwerksantrieb
	GB	Instructions agitator drive
	F	Instructions entrainemet de l'agitateur
	I	Documentazione comando del miscelatore
	E	Documentación Accionamiento del mezclador
	D	Schmierstoff siehe Typenschild
	GB	Lubrication see type plate
	F	lubrifiant voir plaque repère
	I	Lubrificante vedere targhetta
	E	Lubricante ver placa de características
6	D	Schaltpläne, Elektrische Elemente
	GB	Circuit diagrams, Electric Elements
	F	Schéma des connexions, éléments électriques
	I	Schemi elettrici, Componenti elettrici
	E	Esquemas eléctricos, Elementos eléctricos
7	D	EG-Konformitätserklärung
	GB	EC Declaration of conformity
	F	CE Déclaration of conformité
	I	CE Dichiarazione di conformità
	E	CE Declaración de conformidad

RÜHRWERK SPEZIFIKATION / *AGITATOR SPECIFICATION* / AGITATEUR SPÉCIFICATION

Customer: PROCESSTEC Inc. **26.09.2012/ GZ**

Specification no.: VA00002216

Agitator type: VJ350.030

Mixing Task: Blending

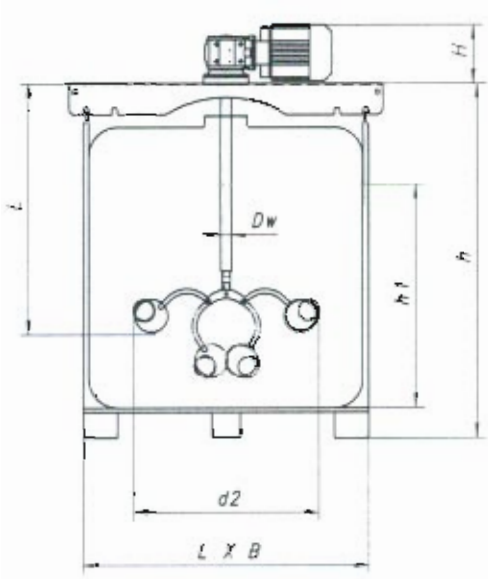

Product data:

Medium	--	
Density	~ max. 1.200	kg/m³
Viscosity	~ max. 16.000	mPas
Solids concentration	--	Gew-%
Operating temperature	25	°C
Operation compression	1	bar, abs

Vessel data:

Containertype/Size		IBC-Container MX/1000
Volume	1000	litre
L x W	1200 x 1000	mm
H1	1125	mm

Agitator operation: The agitator is designed for pass-through operation. The liquid level should cover the impeller level during the filling and the emptying rapidly.

Drive:

Type: Bevel geared drive with integrated frequency converter and digital speed adjuster. Food grade oil

Power:	2,2 kW	Voltage:	360 - 500 Volt	Frequency:	50 Hz
Output speed:	30-304 rpm	Protectionclass:	IP 55	Ex-Protection:	--
Form :	M5	Protective roof:	--	Thermal classification:	F
Montage (outdoor/indoor):		indoor		Ambient temperature max. 35°C	

Agitator:

Cable Set: Compact cable set type VJ866, mounted on cross beam
Operating elements: push buttom ON/OFF, functional components: main switch, undervoltage release, 5-pole with CEE plug, emergency OFF cap, CEE coupling with 1m cable loosely enclosed

Fastening: Cross beam out of stainless steel 1.4301 (V2A) with fork lifter points

Shaft: Lw = 880 mm, Diameter dw = 30 mm,
Construction: Insertion shaft

Impeller: Type VISCO JET® "Tornado", 2-fold, diameter d_2 = 650 mm, foldable

Material: Product wetted parts stainless steel no. 1.4571 (V4A)

Varnishing: RAL 9010, white

Installation: Centric from above

General note: Provided that no exact data regarding product or container were transmitted to us, we have accepted data cited above.

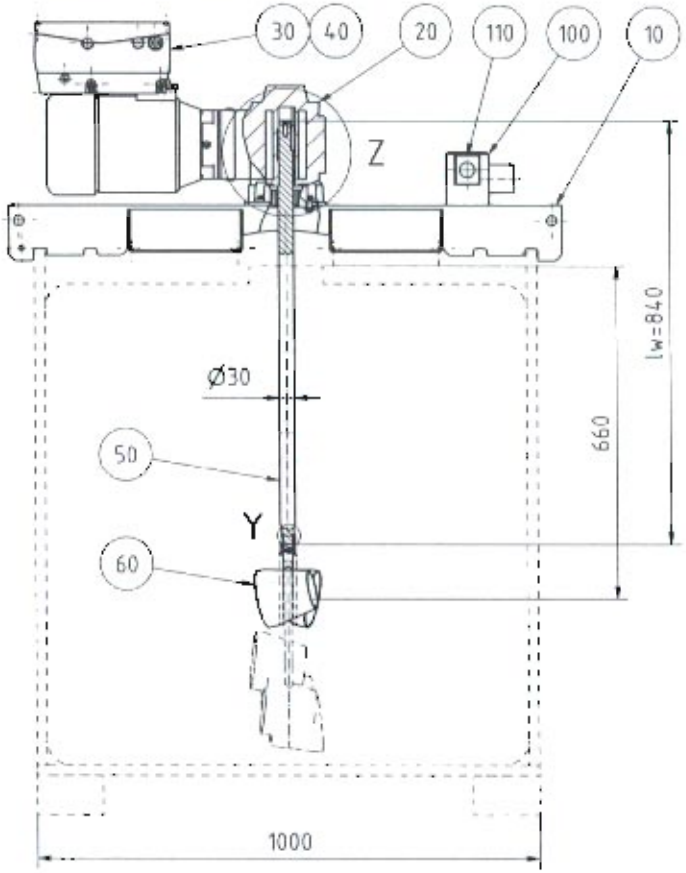

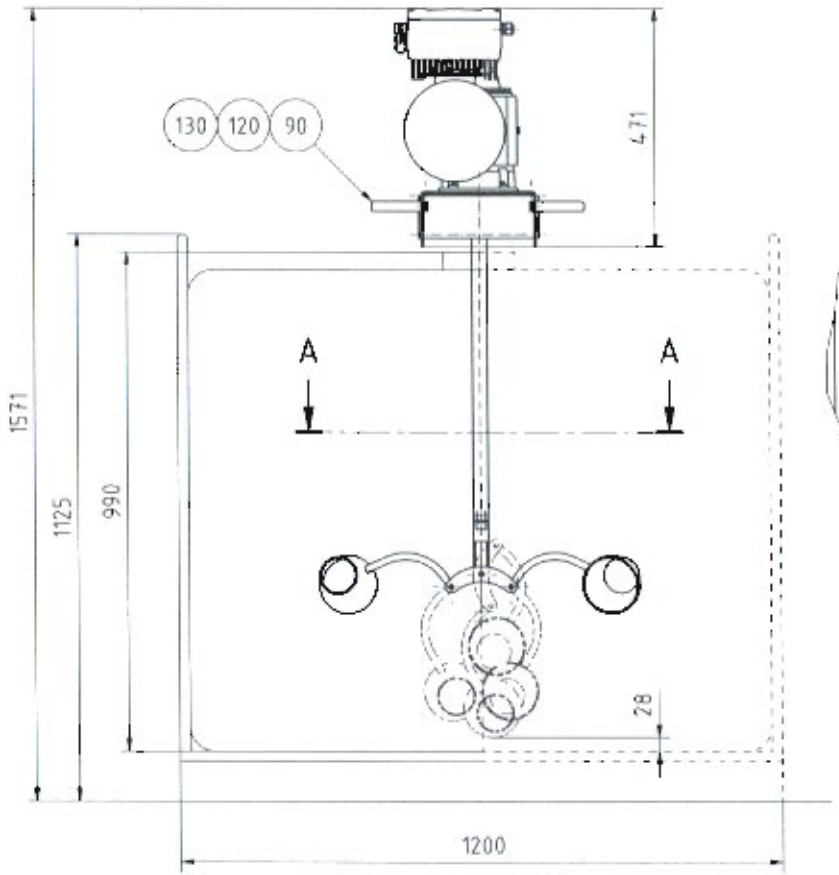

Z (1 : 3)

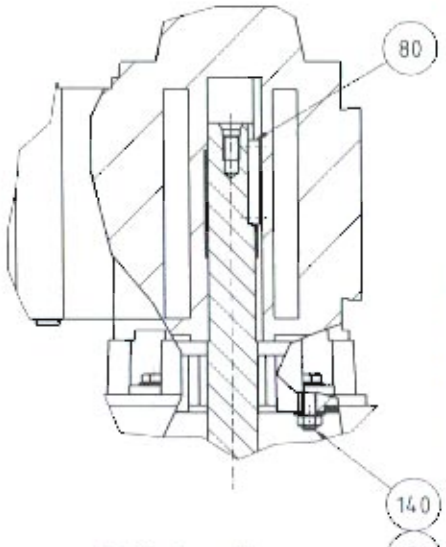

Y (1 : 1)

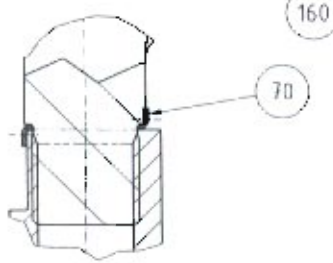

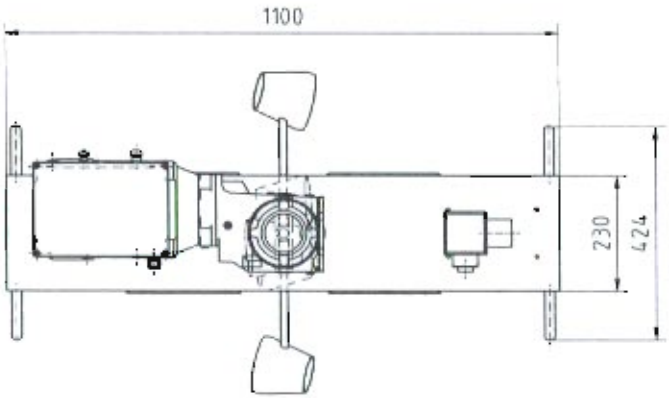

A-A (1 : 15)

Für diese Unterlage behalten wir uns alle Rechte, auch für den Fall von Patenterteilung und der Eintragung eines anderen gewerblichen Schutzrechtes vor. Mißbräuchliche Verwendung, wie insbesondere Vervielfältigung und Weitergabe an Dritte ist nicht gestattet, sie kann zivil- und strafrechtlich geahndet werden.

Kunde		Maßstab 1:10	Gewicht 55,000 kg
K.S.- Nr		Werkstoff.	Farbe: RAL 9010
		Artikel Nr 10040957	
	Datum	Name	
gezeichnet	18.09.2012	Kaiser	
Gepr. abt.1			
Norm			

VISCO JET Rührsysteme GmbH

Container-Aufsatz-Rührwerk

Typ VJ350 030, 2,2kW, 3kW Fu

35000185

Blatt 1 / 3

A3

Status	Änderungen	Datum	Name

ISO 9001 Modell

Ersatz-Index

Pos.	Quantit	Art.-No.	Description
-	-	-	IBC-Container DN150
10	1	10030569	Crossbeam for typ 350
20	1	10039276	Bevel gear motor 2,2 kW, 197/min
30	1	10039452	Frequency converter
40	1	10039360	Adapter BG B INVEOR 2,2-4
50	1	10039518	Shaft
60	1	10028748	VISCO JET® Tornado d=650
70	1	10018670	Locking Plate
80	1		DIN 6885-A
90	4	10030547	Handle to VJ350
100	1	10039278	switch box
110	1	10039480	emercency stop cap
120	4		DIN 933
130	4		Detent edge disc
140	4		DIN 933
150	4		DIN 934
160	8		Detent-edge-disc M8
170	2	10020977	Sticker "VISCO JET® VJ350 medium
180	1	10021041	Sticker "critical rotation speed"
190	1	10021176	Sticker "rotation arrow"

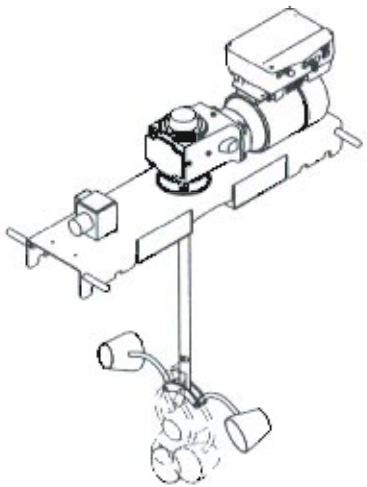

Für diese Unterlage behalten wir uns alle Rechte, auch für den Fall der Patentertheilung und der Eintragung eines anderen gewerblichen Schutzrechtes vor. Mißbräuchliche Verwendung, wie insbesondere interne Mitgabe und Weitergabe an Dritte ist nicht gestattet, sie kann zivil- und strafrechtlich geahndet werden.

Kunde:

AB-Nr.

	Datum	Name
gezeichnet	18.09.2012	Kaiser
Geprüft		
Norm		

Maßstab 1:10 | Gewicht 55.000 kg

Werkstoff | Farbe:

Artikel Nr.: 10040957

Container-Aufsatz-Rührwerk

Typ VJ350.030, 2,2kW, 3kW Fu

35000185

Blatt 3 /3

A3

VISCO JET® Rührsysteme GmbH

Status	Änderungen	Datum	Name

D ALLGEMEINE HINWEISE
GB GENERAL NOTES
F REMARQUES.D'ORDRE GENERAL
I INFORMAZIONI GENERALI
E INDICACIONES GENERALES

VISCO JET®
Rührsysteme GmbH

D Bestimmungsgemäßer Gebrauch
GB Designated use
F Utilisation conforme
I Uso secondo le norme
E Uso adecuado

D

Das Rührwerk darf nur für den eigens dafür hergestellten Zweck verwendet werden.
Den genauen Einsatz des Rührwerkes entnehmen Sie der Spezifikation.
An dem Rührwerk darf mechanisch und elektrisch nichts verändert werden.

GB

The agitator may only be used for its purpose.
You take exact use of the agitator from the specification.
Nothing may be changed mechanically and electrically at the agitator.

F

L'agitateur ne doit être utilisé que pour l'application pour laquelle il est conçu.
Vous voudrez bien prendre connaissance de l'utilisation adéquate de l'agitateur dans la Spécification.
L'agitateur ne doit subir aucune modification mécanique ni électrique.

I

Il miscelatore deve essere utilizzato solo per lo scopo appositamente stabilito a tal proposito. Dalla specifica è possibile apprendere l'esatto impiego del miscelatore. È vietato apportare modifiche al miscelatore di tipo meccanico ed elettrico.

E

El mezclador sólo se puede utilizar con los fines para los que está construido.
Para la descripción exacta de la aplicación del mezclador, consulte las especificaciones.
No se pueden realizar modificaciones mecánicas ni eléctricas en el mezclador.

D / GB / F Transport
I Trasporto
E Transporte

D Zusammengebautes Rührwerk zum Transport nicht an Wellenende und Antrieb gleichzeitig aufnehmen, sondern nur am Antrieb.
Die Welle könnte sonst verbogen werden. Anschlagmittel am Antrieb sicher befestigen.

GB Do not raise the complete agitator by the drive and shaft-end simoultaneously, only by drive. Perhaps the shaft will be bent.
Please fasten the stop means at the drive safely.

F Pour transporter l'agitateur assemblé, ne pas le prendre en même temps par l'extrémité de l'arbre et par la commande mais seulement par la commande. Sinon, l'arbre pourrait être tordu. Bien fixer le matériel d'élingage sur la commande

I Ai fini del trasporto, il miscelatore montato non deve essere sollevato contemporaneamente dall'estremità della frusta e dal complesso motore, bensì solamente dal complesso motore, altrimenti la frusta potrebbe piegarsi. Fissare saldamente l'imbracatura al complesso motore.

E Para transportar el mezclador montado, no elevarlo al mismo tiempo por el extremo del árbol y el accionamiento, sino únicamente por el accionamiento. De lo contrario, el árbol podría deformarse.
Fijar los elementos de enganche de forma segura en el accionamiento.

D ALLGEMEINE HINWEISE
GB GENERAL NOTES
F REMARQUES.D'ORDRE GENERAL
I INFORMAZIONI GENERALI
E INDICACIONES GENERALES

D Wichtige Sicherheits- und Warnhinweise !
GB Important safety and warning notes !
F Consignes importantes de sécurité et d'avertissement !
I Informazioni importanti di avvertimento e per la sicurezza !
E Avisos de seguridad y advertencia importantes !

D **Gefahr durch Strom**
Siehe Betriebsanleitung Motor und Getriebe
GB **Danger by current**
See Operating Instructions Motor and Gear Units
F **Risques dus au courant électrique**
Instructions de service du moteur et du réducteur
I **Pericolo di corrente**
Vedere istruzioni d'uso per motore e trasmissione
E **Peligro por tensión eléctrica**
Ver manual de instrucciones motor y transmisión

D **Achtung**
Rotierende Teile
GB **Attention**
Rotating parts
F **Attention.**
Pièces en rotation
I **Attenzione**
Danni possibili al miscelatore
E **Atención**
Elementos rotatorios

D **Achtung**
Mögliche Beschädigung des Rührwerks
GB **Attention**
The agitator might get damaged
F **Attention**
Dommage possible de l'agitateur.
I **Attenzione**
Parti rotanti
E **Atención**
Peligro de dañar el mezclador

D ALLGEMEINE HINWEISE
GB GENERAL NOTES
F REMARQUES D'ORDRE GENERAL
I INFORMAZIONI GENERALI
E INDICACIONES GENERALES

D Wichtige Gebrauchshinweise !
GB Important use notes !
F Consignes importantes d'utilisation !
I Importanti istruzioni d'uso!
E Indicaciones de uso importantes.

D **Wartung**
Siehe Wartung (Betriebsanweisung)
GB **Maintenance**
See maintenance (Business Instruction)
F **Maintenance**
Cf. Maintenance (Instructions de service)
I **Manutenzione**
Vedere manutenzione (istruzioni d'uso)
E **Mantenimiento**
Ver mantenimiento (instrucciones de servicio)

D **Schmierung**
Siehe Betriebsanweisung
GB **Lubrication**
See Business Instruction
F **Lubrification**
Cf. Instructions de service
I **Lubrificazione**
Vedere istruzioni d'uso
E **Lubricación**
Ver instrucciones de servicio

D BESCHREIBUNG DER WIRKUNGSWEISE
GB DESCRIPTION OF THE MODE OF ACTION
F DESCRIPTION DU FONCTIONNEMENT
I DESCRIZIONE DEL FUNZIONAMENTO
E DESCRIPCIÓN DEL PRINCIPIO DE FUNCIONAMIENTO

VISCO JET®
Rührsysteme GmbH

D

Bei dem VISCO JET® Rührsystem handelt es sich um das Original aus dem Hause VISCO JET, einen konusförmigen und eigendynamischen Langsamläufer.
Dieses Prinzip ermöglicht bereits bei niedrigen Umlaufgeschwindigkeiten eine effiziente Durchmischung
Die speziellen Vorteile :
- schonendes Rühren durch Konusprinzip
- niedrige Drehzahlen
- kein Lufteinzug
- keine Schaumbildung

GB

The VISCO JET® agitator system is the genuine conical, high-momentum, low-speed system of VISCO JET.
This principle already enables an efficient mixture at low circulation speeds.
the special advantages :
- gentle agitating by principle of cone
- low rotational speeds
- no air inclusion
- no foam formation

F

Le système d'agitation VISCO JET® est l'original de la maison VISCO JET et possède un rotor à régime lent, de forme conique et à dynamique propre.
Ce principe permet un mélange efficient déjà à basse vitesse de rotation.
Les avantages spéciaux :
- mélange doux grâce au principe de cône
- vitesses faibles
- pas d'inclusion d'air
- pas de formation de mousse

I

Nel caso del sistema di miscelazione VISCO JET® si tratta dell'originale della Ditta VISCO JET, un rotore lento, a forma conica, con propria dinamica.
Questo sistema rende possibile, già in caso di bassa velocità di rotazione, un'efficiente miscelazione.
I vantaggi particolari :
- miscelazione delicata grazie al sistema conico
- numero di giri ridotto
- nessuna entrata d'aria
- nessuna formazione di schiuma

E

El sistema de agitación VISCO JET® es el original de la casa VISCO JET, en forma de cono, con dinámica propia y a rotor lento.
Este principio de funcionamiento proporciona un mezclado eficaz incluso a bajas velocidades de rotación.
Las ventajas específicas son :
- mezclado cuidadoso por sistema cónico
- bajas velocidades de giro
- sin penetración de aire
- sin formación de espuma

D BESCHREIBUNG DER WIRKUNGSWEISE
GB DESCRIPTION OF THE MODE OF ACTION
F DESCRIPTION DU FONCTIONNEMENT
I DESCRIZIONE DEL FUNZIONAMENTO
E DESCRIPCIÓN DEL PRINCIPIO DE FUNCIONAMIENTO

VISCO JET®
Rührsysteme GmbH

D Das VISCO JET® Rührsystem
gibt es in zwei Varianten:
Spiralkonus / Becherkonus

Spiralkonus
Spiralcone
Cône à spirale
Cono a spirale
Cónico helicoidal

GB The VISCO JET® agitator system
is available in two variants:
Spiralcone / Beakercone

F Le système mélangeur VISCO JET®
existe en deux variantes:
cône spiralé / godet conique

Becherkonus
Beakercone
Godet conique
Cono a coppa
Cónico cilíndrico

I Il sistema di miscelazione VISCO JET®
è disponibile in due versioni:
cono a spirale / cono a coppa

E El mezclador VISCO JET®
existe en dos variantes:
cónico helicoidal / cónico cilíndrico

D Die Organe unterscheiden sich nicht nur äußerlich, sondern auch durch ihre Fähigkeiten, hoch- oder niedrigviskose Stoffe zu vermischen.
Der Spiralkonus erzeugt ein ideales Mischergebnis in hochviskosem Mischgut mit Feststoffanteilen, bei dem auch Scherwirkungen und Axialkräfte auftreten.
Der Becherkonus wiederum ist für die niedrigviskosen bis mittelviskosen Mischgüter zuständig (schonendes Rühren).

GB The organs have also abilities to mix high or low viscous substances.
The spiralcone produces an ideal mixing result into high viscous mixing good with solid components, which also appear at shearing effects and axial forces.
However, the beakercone is responsible for the low viscous to average viscous mixing goods (gentle agitate).

D BESCHREIBUNG DER WIRKUNGSWEISE
GB DESCRIPTION OF THE MODE OF ACTION
F DESCRIPTION DU FONCTIONNEMENT
I DESCRIZIONE DEL FUNZIONAMENTO
E DESCRIPCIÓN DEL PRINCIPIO DE FUNCIONAMIENTO

F Les organes ne se différencient pas seulement extérieurement mais aussi par leur capacité de mélanger des substances très visqueuses ou faiblement visqueuses.
Le cône spiralé donne un résultat de mélange idéal pour un produit à mélanger très visqueux contenant des substances solides et dans lequel des cisaillements et forces axiales peuvent se présenter.
Par contre le godet conique est compétent pour les produits à mélanger peu à moyens visqueux (mélange doux)

I Gli organi si differenziano non solo per l'aspetto esterno, ma anche per la loro capacità di miscelazione di materiali dalla viscosità elevata o ridotta.
Il cono a spirale offre un ideale risultato di miscelazione per quanto riguarda i materiali misti altamente viscosi contenenti sostanze solide, nei quali si manifestano anche effetti di taglio e forze assiali.
Il cono a coppa invece è adatto per materiali misti a viscosità bassa-media (miscelazione delicata)

E Los órganos se distinguen tanto físicamente como por su capacidad de mezclado de sustancias de alta y baja viscosidad, respectivamente.
El cono helicoidal proporciona excelentes resultados en la mezcla de materiales con partículas sólidas, que implica la presencia de fuerzas axiales y cizallamientos.
El cono cilíndrico, por su parte, es la solución óptima para mezclar materiales de baja y media viscosidad (mezclado cuidadoso).

D BETRIEBSANWEISUNG VJ 350 (ex)
GB BUSINESS INSTRUCTION VJ 350 (ex)
F MODE D'EMPLOI VJ 350 (ex)
I ISTRUZIONI D'USO VJ 350 (ex)
E INSTRUCCIONES DE SERVICIO VJ 350 (ex)

VISCO JET®
Rührsysteme GmbH

D Einbauhinweise
GB Installation notes
F Notice de montage
I Indicazioni per il montaggio
E Instrucciones de montaje

D Drehrichtung
GB Direction of rotation
F Sens de rotation
I Senso di rotazione
E . ..Sentido de giro

D VISCO JET® so einbauen, dass von oben her gesehen, der große Verdrängerdurchmesser rechts steht. (Pos. A)

GB Assemble the VISCO JET® impeller that the big cone-diameter stand on the right (pos. A).

F Monter le VISCO JET® de telle sorte que, vu d'en haut, le grand diamètre de déplacement soit à droite (pos. A)

I Montare VISCO JET® di modo che visto dall'alto il grande diametro volumetrico si trovi a destra (pos. A)

E Montar el VISCO JET® de forma que, mirando desde arriba, el diámetro grande de desplazador se encuentre a la derecha (pos. A).

A

D Festsitz des Rührorgans prüfen
GB Check force fit of agitator organ
F Vérifier l'ajustement de l'organe mélangeur
I Controllare l'accoppiamento preciso bloccato serrato dell'organo di miscelazione
E Comprobar el asiento fijo del órgano mezclador

D Rührwerk am Antrieb halten und vorsichtig mit zusammengeklapptem Rührorgan in den Containerstutzen einführen.

GB Keep the agitator at the drive and put it carefully into the container-nozzle with fold up impeller.

F Tenir l'agitateur par la commande et introduire avec précaution dans la tubulure du conteneur avec l'organe mélangeur replié.

I Tenere il miscelatore dal gruppo motore e con cautela introdurlo, con l'organo di miscelazione piegato, nel bocchettone del contenitore.

E Sujetar el mezclador por el accionamiento e introducirlo cuidadosamente y con el órgano mezclador plegado en el empalme del contenedor.

D Rührwerkstraverse auf stabilem Container-Rahmen aufsetzen.
Der Containerrahmen muss in den Traversenschlitzen liegen.

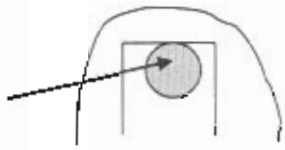

GB Place agitator cross- beam on stable container frame.
The slit have to be positioned over the container frame.

F Poser la traverse de l'agitateur sur un cadre bien stable du conteneur. Il faut que le cadre du conteneur repose bien dans les encoches de la traverse.

I Mettere la traversa del miscelatore sul telaio stabile del contenitore.
Il telaio del contenitore si deve trovare nelle fessure della traversa.

E Apoyar el travesaño del mezclador en el bastidor resistente del contenedor.
El bastidor del contenedor debe encajar en las ranuras del travesaño.

D Elektrischer Anschluss
GB Electrical connection
F Raccordement électrique
I Collegamento elettrico
E Conexión eléctrica

D Der elektrische Anschluss darf nur von einer hierzu autorisierten Person vorgenommen werden. Hierzu die Betriebsanleitung der Antriebsunterlagen beachten.
Bei Ex – Antrieben Erdung anschließen.

GB The electrical connection may only be carried out by an authorized person. Please consider the Drive Operating Instructions. If explosion-prodected AC motors, then earthing attaching.

F Le raccordement électrique ne sera exécuté par une personne autorisée. Pour ce faire, prière de suivre les instructions de service de la documentation de la commande.
En cas de commandes EX, raccorder la prise de terre.

I Il collegamento elettrico deve essere effettuato esclusivamente da una persona autorizzata a tale scopo. A tale scopo osservare la documentazione riguardante il gruppo motore.
Effettuare la messa a terra in caso di gruppi motore antideflagranti.

E La conexión eléctrica de la máquina únicamente puede ser realizada por una persona autorizada. Para ello, observar las instrucciones de servicio de la documentación del accionamiento.
En accionamientos con protección antiexplosiva debe conectarse la puesta a tierra.

D Inbetriebnahme
GB Start up
F Mise en service
I Messa in funzione
E Puesta en servicio

D

Vor dem Einschalten des Rührwerkes sicherstellen, dass sich keine Gegenstände im Aktionsbereich der drehenden Teile befinden.
Beim Klemmkastenanschluss: Die Drehrichtung des Rührwerkes beachten.
Die Rührwelle dreht sich, vom Antrieb auf das Rührorgan gesehen, im Uhrzeigersinn.

GB

Please, make sure, that no persons or objects are in the action area of the rotating parts before switching on the agitator.
Please consider the direction of the agitator by the terminal box connection. Direction of rotation seen from the drive to the impeller must be clockwise.

F

Avant de mettre l'agitateur en circuit, s'assurer qu'il n'y a pas d'objets dans la zone d'action des pièces rotatives.
En cas de raccordement d'un coffret-bornier : faire attention au sens de rotation de l'agitateur. Vu sur l'organe mélangeur, l'arbre mélangeur tourne dans le sens des aiguilles d'une montre.

I

Prima dell'accensione del miscelatore assicurarsi che non si trova alcun oggetto nell'area di lavoro delle parti rotanti.
Durante il collegamento della casetta terminale: osservare il senso di rotazione del miscelatore. Vista dal complesso motore verso l'organo di miscelazione, la frusta di miscelazione gira in senso orario.

E

Antes de conectar el mezclador, asegurarse de que no se encuentre ningún objeto en el área de acción de las piezas rotatorias.
Conexiones en la caja de bornes: Observar el sentido de giro del mezclador. Mirando desde el accionamiento hacia el órgano mezclador, el árbol mezclador gira en el sentido de la agujas del reloj.

D

Das Rührwerk darf nur betrieben werden, wenn es im Container eingebaut ist. Bei Arbeiten am Rührwerk, z.B. Reinigungsarbeiten, stets Antrieb gegen unbeabsichtigtes Einschalten elektrisch sichern, bzw. sperren.

GB

The agitator may only be operated, if it is installed in the container. Always safeguard the drive against switching on uninten-tionally while at work on the agitator (better close the drive).

F

L'agitateur ne sera utilisé que s'il est monté dans le conteneur.
En cas de travaux sur l'agitateur, par ex. travaux de nettoyage, toujours bloquer la commande électriquement contre toute mise en circuit par inadvertance.

I

Il miscelatore deve essere messo in funzione solo quando è montato nel contenitore.
Durante lavori sul miscelatore (per es. attività di pulizia), assicurare sempre, dal punto di vista elettrico, il complesso motore contro accensioni involontarie oppure bloccarlo.

E

El mezclador únicamente se puede utilizar cuando está instalado en el contenedor.
Antes de efectuar cualquier trabajo en el mezclador, como por ejemplo la limpieza, asegurar el accionamiento eléctricamente o bloquearlo de forma que no se pueda poner en marcha de forma accidental.

D Wellenwechsel
GB Changing the agitator shaft
F Remplacement de l'arbre
I Sostituzione della frusta
E Cambio del árbol

D Die Rührwelle beim Aus- und Einbauen vorher gegen Abfallen sichern. Näheres zur Montage/ Demontage im Bereich Getriebehohlwelle siehe Getriebe-Bedienungsanleitung.

GB When mounting or dismounting the agitator shaft make sure that the shaft does not fall down. Information about mounting and dismounting the shaft you may see in the Gear Units Operating Instructions.

F Avant de démonter et de monter, toujours bloquer l'arbre mélangeur afin qu'il ne tombe pas. Pour plus de détails sur le montage/démontage dans la zone de l'arbre de l'engrenage, cf. les instructions de service de l'engrenage.

I In caso di montaggio e smontaggio assicurare in anticipo la frusta di miscelazione contro cadute. Per maggiori dettagli sul montaggio/smontaggio nell'area dell'albero cavo della trasmissione vedere le istruzioni d'uso riguardanti la trasmissione.

E Antes de desmontar o montar el árbol mezclador, asegurarse de que no se pueda caer. Para más información acerca del montaje y desmontaje relativos al árbol de transmisión hueco, ver el manual de instrucciones de la transmisión.

D Wartung
GB Maintenance
F Maintenance
I Manutenzione
E Mantenimiento

D Schraubenverbindungen
GB Bolted connections
F Assemblages par vis
I Raccordi a vite
E Uniones atornilladas

D Alle Schraubenverbindungen auf Festsitz prüfen und eventuell nachziehen. Hierzu Anzugsdrehmoment beachten (siehe Schraubenanzugsmomente).

GB Check all bolted joints on force fit and trace if necessary. Consider tightening torque to this (see tightening torque).

F Vérifier que tous les assemblages par vis sont bien ajustés et les resserrer éventuellement. Pour ce faire, prière de tenir compte du couple de serrage (cf. couples de serrage des vis).

I Controllare l'accoppiamento preciso bloccato serrato dei raccordi a vite ed eventualmente stringerli. A tale scopo osservare la coppia di serraggio (vedere coppie di serraggio delle viti).

E Comprobar el correcto apriete de las uniones atornilladas y reapretarlas en caso necesario.
Observar los pares de apriete (ver pares de apriete de tornillos).

D Wellensicherung
GB Shaft locking device
F Blocage de l'arbre
I Fissaggio della frusta
E Seguro del árbol

D Bei der Getriebehohlwellenausführung ist die Rührwelle mit einer Anschlagscheibe bzw. Schraube befestigt (siehe Antrieb-Betriebsanleitung). Bei Inspektionsarbeiten (z.B. jährlich) sollte die Schraubverbindung auf Festsitz geprüft werden.

GB At versions with a gear hollow shaft the agitator shaft must be fixed with a stop disc or a screw (see Drive Operating Instructions). At inspection works (e.g. annual) the bolted joint should be checked on force fit.

F Sur la version avec un arbre creux d'engrenage, l'arbre mélangeur est fixé avec une rondelle de butée, voire une vis (cf. les instructions de service de la commande). Lors des travaux d'inspection (par ex. une fois par an), il faudrait vérifier si l'assemblage par vis est bien ajusté.

I Se è presente l'albero cavo della trasmissione, la frusta di miscelazione deve essere fissata con una rosetta di arresto o con una vite (vedere le istruzioni d'uso del gruppo motore). In caso di ispezioni (per es. annuali) bisognerebbe controllare l'accoppiamento preciso bloccato serrato del raccordo a vite.

E En las transmisiones con árbol hueco, el árbol mezclador está fijado mediante una arandela de tope o un tornillo (ver manual de instrucciones del accionamiento). En las inspecciones (p.ej. anuales) debe comprobarse el correcto apriete de la unión atornillada.

D	Schmierung
GB	Lubrication
F	Lubrification
I	Lubrificazione
E	Lubricación

D	Hierzu Antriebsunterlagen beachten. Insbesondere die Bauform, die zugeordnete Schmierstoffmenge sowie die Schmierstoffempfehlung des Antriebslieferanten beachten.
GB	Consider Drive Operating Instructions to this. Especially the form, the assigned lubrication amount as well as the lubrication recommendation of the drive deliverer are to be taken into account particularly.
F	A ce sujet, suivre la documentation de la commande. Faire particulièrement attention à la forme, à la quantité de lubrifiant attribuée ainsi qu'à la recommandation du fournisseur de la commande concernant les lubrifiants.
I	A tale scopo osservare la documentazione riguardante il gruppo motore. Fare attenzione soprattutto alla versione, alla quantità di lubrificante associata e ai consigli del fornitore del gruppo motore riguardanti il lubrificante da utilizzare.
E	Observar la documentación del accionamiento. Observar sobre todo el tipo de construcción, la cantidad de lubricante necesaria y el tipo de lubricante recomendado por el fabricante del accionamiento.

D STÖRUNGEN UND ABHILFEN
GB FAILURES AND REMEDIES
F PANNES ET REMEDES
I ANOMALIE E RIMEDI
E FALLOS Y SOLUCIONES

VISCO JET®
Rührsysteme GmbH

D **FEHLER** GB **FAULT** F **DEFAUT** I **ERRORE** E **FALLO**	D **MÖGLICHE URSACHE** GB **POSSIBLE CAUSE** F **CAUSE POSSIBLE** I **POSSIBILI CAUSE** E **POSIBLE CAUSA**	D **BEHEBUNG** GB **REMEDYING** F **ELIMINATION** I **ELIMINAZIONE** E **SOLUCIÓN**
D Rührwerk läuft nicht GB Agitator does not run F L'agitateur ne fonctionne pas I Il miscelatore non funziona E El mezclador no gira	D Stromversorgung fehlt GB Power supply is missing F Alimentation en électricité fait défaut I Manca l'alimentazione elettrica E Sin alimentación de corriente	D Von Fachpersonal (Elektriker) überprüfen lassen GB Check has to be done by specialist staff (electrician) F Faire vérifier par du personnel spécialisé (électricien) I Far controllare da un esperto (elettricista) E Comprobación a cargo de personal especializado (electricista)
D Antrieb bewegt sich (vibriert) GB Drive moves (vibrates) F La commande remue (vibre) I Il complesso motore si muove (vibra) E El accionamiento se mueve (vibraciones)	D Verschraubung ist locker GB Union is loose F L'assemblage vissé est trop lâche I L'avvitatura è lenta E La atornilladura está suelta	D Verschraubung festziehen GB Tighten union F Serrer à fond l'assemblage vissé I Stringere l'avvitatura E Apretar la atornilladura
D Geräusche im Antrieb GB Noises in the drive F Bruits dans la commande I Rumori nel complesso motore E Ruidos en el accionamiento	D Lager, Motor oder Getriebe defekt GB Bearing, engine or gearbox are faulty F Roulement, moteur ou réducteur défectueux I Cuscinetto, motore o trasmissione difettosi E Cojinete, motor o transmisión defectuoso	D An Fa. VISCO JET wenden GB Consult Fa. VISCO JET F S'adresser à la Sté VISCO JET I Rivolgersi alla ditta VISCO JET E Consultar a VISCO JET
D Anormales Erwärmen des Antriebs GB Abnormal warm of the drive F Echauffement anormal de la commande I Riscaldamento anormale del complesso motore E El accionamiento se sobrecalienta	D Motor oder Getriebe defekt GB Motor or gearbox are faulty F Moteur ou réducteur défectueux I Motore o trasmissione difettosi E Motor o transmisión defectuoso	D An den Motor-/ Getriebe-hersteller wenden / GB Consult the engine-/ gearbox manufacturer / F S'adresser au fabricant de moteur/réducteur I Rivolgersi al produttore del motore / trasmissione E Consultar al fabricante del motor / de la transmisión
D Rührwerk vibriert GB Agitator vibrates F L'agitateur vibre I Il miscelatore vibra E El mezclador vibra	D Welle hat einen Schlag GB Shaft has a blow F L'arbre à un choc I La frusta di miscelazione ha subito un urto E Árbol deformado	D An Fa. VISCO JET wenden GB Consult Fa. VISCO JET F S'adresser à la Sté VISCO JET I Rivolgersi alla ditta VISCO JET E Consultar a VISCO JET
D Schlaggeräusche im Behälter GB Blow noises in the vessel F Bruits de coups dans le récipient I Rumori da urto nel contenitore E Se percibe un golpeteo en el recipiente	D Fremdkörper im Behälter GB Alien element in the vessel F Corps étranger dans le récipient I Corpi estranei nel contenitore E Elemento extraño en el recipiente	D Prüfen und Fremdkörper entfernen GB Check and remove the alien element F Vérifier et enlever le corps étranger I Controllare e allontanare i corpi estranei E Comprobar el recipiente y retirar el elemento extraño

D Schraubenanzugsmomente
GB Tightening torques
F Couples de serrage des vis
I Momenti di serraggio di viti
E Pares de apriete de tornillos

VISCO JET®
Rührsysteme GmbH

D Gewinde geschmiert / GB Thread with lubrication / F Filet lubrifié / I Filettatura lubrificata / E Rosca lubricada

18.11.2004 / HS

D Werkstoff-Typ GB Material-type F Type-matériau I Tipo materiale E Tipo de material	D Schraubengröße GB Screw size F Dimensions de vis I Dimensioni viti E Tamaño de tornillo	D Temperatur / GB Temperature / F Température / I Temperatura / E Temperatura (°C)						
		-40	-10	+20	+100	+200	+250	+300
5.6	M8	13	13	13	12	10	9.4	9
	M 10	25	25	25	23	20	18	16
	M 12	44	44	44	40	34	32	29
	M 16	108	108	108	97	83	78	70
	M 20	212	212	212	191	163	152	138
	M 24	365	365	365	330	280	263	236
	M 30	730	730	730	656	555	522	475
8.8	M 8	23	23	23	21	20	19	17
	M 10	49	49	49	45	41	37	35
	M 12	77	77	77	73	68	64	59
	M 16	193	193	193	180	163	154	145
	M 20	378	378	378	350	318	302	284
	M 24	652	652	652	601	552	520	490
10.9	M 12	-	-	89	89	-	-	-
	M 16	-	-	218	218	-	-	-
	M 20	-	-	395	395	-	-	-
	M 24	-	-	720	720	-	-	-
	M 30	-	-	1412	1412	-	-	-
	M 36	-	-	2460	2460	-	-	-
A2-70 A4-70 D Edelstahl GB Stainless steel F Acier fin I Acciaio legato E Acero inoxidable	M 8	16	16	16	14	13	13	12
	M 12	50	50	50	42	40	39	37
	M 16	122	122	122	103	97	94	91
	M 20	207	207	207	176	165	161	155
A4-50	M 24	254	254	254	216	204	197	191

Intelligent Drivesystems, Worldwide Services

(GB)

B1091

Operating and Maintenance Instructions

Three-phase Asynchronous Motors – Standard Design
Explosion-proof Motors with Type of Protection „e"
Dust Explosion-proof Motors (Zone 21+ Zone 22)

NORD DRIVESYSTEMS

Contents

1.		**General information**	3
2.		**Description**	4
	2.1	Range of application	4
3.		**Information on the designated use of electric motors**	4
	3.1	Transport, storage	4
	3.2	Installation	5
	3.3	Balancing, output components	5
	3.4	Alignment	5
	3.5	Electrical connection	5
	3.6	Checking insulation resistance	6
	3.7	Commissioning	6
4.		**Maintenance/servicing**	7
5.		**Motors with type of protection Increased Safety Exe**	8
6.		**Motors for use in Zone 21 and Zone 22**	10
	6.1	General	10
	6.2	Safety instructions	10
	6.3	Commissioning instructions/range of application	10
	6.4	Design and method of operation	11
	6.5	Minimum cross-sections of protective earth wires	11
	6.6	Maintenance	12
7.		**IE2-ATEX Motors for use in Zone 21 and Zone 22**	13
	7.1	General information	13
	7.1.2	Impact test	13
	7.2	Safety information	13
	7.3	Commissioning information / Field of application / Extended ambient temperature range	13
	7.3.1	Electrical connection	14
	7.3.2	Cable and wiring glands	14
	7.3.3	Permissible ambient temperature range	15
	7.3.4	Painting	15
	7.3.5	IEC-B14 Motors	15
	7.4	Structure and method of use	16
	7.5	Minimum cross section of bonding conductors	16
	7.6	Maintenance	16
8.		**Options for motors for use in Zone 22**	17
	8.1	Option inverter operation	17
	8.2	Option external fan	17
	8.3	Option return stop	17
	8.4	Option brake	17
9.		**Spare parts drawing and spare parts list**	18
10.		**Conformity declarations**	19

Safety and information signs

Please comply with the following safety and information signs!

Danger!
Danger to life and risk of injury for humans

Attention!
Damage to the machine possible

Danger!
Important information for explosion protection

Information!

1. Information

1. General information

These Operating Instructions must be read before you transport, assemble, commission, maintain or repair NORD motors. All persons who are involved with such tasks must observe these Operating Instructions. All safety instructions provided in these Operating Instructions must be strictly observed for reasons of personal protection and protection of property.

Information and instructions provided in the manual supplied, safety and commissioning information and all other manuals must be observed.

This is absolutely essential in order to avoid hazards and damage!
Any applicable national, local and system-specific regulations and requirements must also be observed!

Custom designs and design variants may differ on technical details. If any points are not clear, it is urgently recommended that you consult the manufacturer stating the type designation and motor number or have the maintenance work performed by NORD.
Qualified staff are persons who, owing to their training, experience, instruction received, and their knowledge of relevant standards, accident prevention regulations and the appropriate operating conditions, are entitled to perform the activities necessary in order to put the motor into operation.

That also calls for knowledge of First Aid and local rescue facilities. It is assumed that the work for transport, assembly, installation, commissioning, maintenance and repair will be performed by qualified staff.

The following points in particular must be observed:

- Specifications and information about permissible use, assembly, connection, ambient and operating conditions, which are included in the catalogue, the order documentation and any other product documentation
- The local, system-specific regulations and requirements
- Expert use of tools, hoisting equipment and transport equipment
- Use of personal safety equipment

For reasons of simplicity the Operating Instructions cannot contain all detailed information about possible design variants so they cannot take into consideration every imaginable case of installation, operation or maintenance.

For this reason these Operating Instructions essentially only contain such instructions as are required for normal use by qualified staff. To prevent malfunctions it is necessary that the specified maintenance and inspection work be performed by appropriately trained staff.

- The engineering guideline 605 2101 must be included with the operating instructions when operated with the inverter.
- The additional operating instructions must be taken into account if an external fan is present.
- The brake operating instructions must also be taken into account with braking motors.

If, for any reason, the operating instructions or the engineering guidelines are lost, new documentation must be obtained from Getriebebau NORD.

2.1 Range of application

Use of the motors:

The motors may only be used for their intended purpose.
The motors are designed with at least IP 55 protection (for degree of protection see name plate). They can be installed in a dusty or moist environment.
The necessary degree of protection and any additional precautions required always depend on the operating and environmental conditions. For outdoor installation and vertical designs, e.g. V1 or V5 with shaft pointing down, NORD recommends using the option of the double fan hood [RDD].The motors must be protected against intense sunlight, e.g. by means of a protective roof. The insulation is tropic-proof.

Installation height: ≤ 1000 m
Ambient temperature: -20°C...+40°C. With standard motors, a greater ambient temperature range is permitted from -20°C...**+60**°C. The rated power must however be reduced to **82%** of the catalogue value. If the maximum value of the ambient temperature is between **+40**°C and **+60**°C, the value of the power consumption can be inversely interpolated linearly between **100%** and **82%**.
The motor connection cables and the cable inlet glands must be suitable for temperatures ≥ 90°C.

3. Information on the designated use of electric motors

Work may only be performed if the system is disconnected from the mains supply.

3.1 Transport, storage

- For transport use all the hoisting lugs fitted to the motor!
- The hoisting lugs are designed for the weight of the motor; do not attach any additional loads!
- To transport machine sets (e.g. gear unit attachments) only use the hoisting lugs and pins provided!
- Machine sets must not be hoisted by attaching to individual machines!

To prevent damage to the motor, the motor must always be lifted with suitable hoisting equipment. The antifriction bearings should be replaced if the time between delivery and motor commissioning under favourable conditions (storage in dry, dust-free and vibration-free rooms) is more than 4 years. Under unfavourable conditions that time is reduced considerably. It may be necessary to treat unprotected, machine surfaces (flanging surface, shaft end; ...) with corrosion inhibitor. If necessary, check the insulation resistance of the winding, see section 3.6.
Changes in normal operation (higher power consumption, higher temperatures or higher vibrations, unusual noises or smells, response from the monitoring system, etc.) indicate that operation is impaired. To avoid personal injury and damage to property, the maintenance staff responsible must be informed about the change immediately.

In case of doubt switch off the motor without delay, as soon as the status of the system permits.

3.2 Installation

- Screwed-in lifting eyes must either be screwed in fully or removed after erection!
- Running smoothness: Precise alignment of the coupling and a well-balanced drive element (coupling, belt pulleys, fans, etc.) are prerequisites for quiet, low vibration operation.
- Complete balancing of the motor with the drive elements may be necessary.
- The upper section of the terminal box and the terminal box position can be rotated by 4 x 90 degrees
- IEC-B14 motors:
  All four fixing screws, even if not required, must be screwed into the flanged bearing plate! The fixing screw threads must be inserted with a sealant, e.g. Loctite 242. The maximum screw-in depth in the bearing plate is 2 x d
- The motor must be inspected for damage before installation and commissioning. A damaged motor must not be commissioned.

3.3 Balancing, output components

Fitting and removing output assemblies (coupling, pulleys, gear, ...) must be performed with a suitable device. The rotors are balanced with half key balancing as standard. When fitting output assemblies to the motor shaft observe the appropriate type of balancing! The output assemblies have to be balanced in accordance with DIN ISO 1940!
Take the general precautions necessary for providing the output assemblies with shock protection. If a motor is put into operation without an output assembly, prevent the key from being flung out. This also applies if a second shaft end is fitted. Alternatively, remove the key.

3.4 Alignment

Especially if there is a direct coupling, align the shafts of the motor and the driven machine with one another axially and radially. Any inaccurate alignment can lead to bearing damage, excessive vibrations and shaft breakage.

3.5 Electrical connection

Feed the connecting leads into the terminal box with cable glands. The terminal box must be sealed so that it is dust-tight and water-tight. The mains voltage and mains frequency must agree with the figures on the name plate. ± 5% voltage deviations or ± 2% frequency deviations are permissible without any reduction in performance. The connections and arrangement of the terminal board jumpers must conform to the circuit diagram provided in the terminal box. Connect the protective earth lead to that protective earth terminal

Provide the ends of the connecting leads with cable lugs or curved ring eyes and connect them to the terminal board. That also applies to the protective earth connection and the external bonding lead.
For tightening torques at the screw connections of electric terminals and the terminal board connections (apart from terminal strips) refer to the table below

Tightening torques for terminal board connections				
Thread diameter	M4	M5	M6	M8
Tightening torque (Nm)	0.6 – 1.2	1.8 – 2.5	2.7 – 4.0	5.5 – 8.0

If the machine has an auxiliary heater, it must not be switched on during operation.

3.6 Checking insulation resistance

Before putting the motor into operation for the first time, after a lengthy period of storage or standstill (approx. 6 months), the insulation resistance of the winding has to be determined. During and directly after measurement the terminals carry hazardous voltages in some cases and must not be touched.

Insulation resistance
The insulation resistance of new, cleaned, repaired windings against the housing and against one another is >200 M Ohm.

Measurement
In the case of windings up to an operating voltage of 400 V the insulation resistance against the housing must be measured with a DC voltage of 500 V. At operating voltages up to 725 V measure with a DC voltage of 1000 V. When doing this the temperature of the windings should be 25°C ± 15°C.

Checking
If, in the case of a new, cleaned winding or a repaired motor which has been stored or shut down for any lengthy period, the insulation resistance of the winding against the housing is less than 50 MOhm, the cause may be moisture. The windings will then have to be dried.
After any lengthy period of operation the insulation resistance may drop. As long as the measured value does not fall below the critical insulation resistance of < 50 MOhm, the motor may continue to be operated. If the value falls below the critical level, the cause must be established and if necessary, the windings or winding sections must be repaired, cleaned or dried.

3.7 Commissioning

Note: Electromagnetic compatibility

Emitted interference: If torques are not equal (e.g. drive of a piston compressor) a non-sinusoidal motor current is bound to develop, the harmonics of which may cause impermissible mains influence and hence impermissible emitted interference.
If power is fed via an inverter, different levels of emitted interference will occur, depending on the design of inverter (type, suppression, manufacturer). It is absolutely essential that the EMC information provided by the inverter manufacturer be observed. If the manufacturer recommends a screened motor supply lead, screening will be most effective if it is electrically connected to a large area of the metal terminal box of the motor (with EMC cable gland made of metal). In the case of motors with built-in sensors (e.g. PTC thermistors) interference voltages can occur on the sensor line, caused by the inverter.

Interference immunity: In the case of motors with built-in sensors (e.g. PTC thermistors) the user himself must ensure adequate interference immunity by making a suitable selection of sensor signal line (possibly with screening, interfacing as with motor supply lead) and the analysing instrument. Prior to commissioning always observe the information and instructions in the operating manuals for inverters as well as all other sets of instructions. After attaching the motors, check them to make sure they are operating properly! In the case of brake motors also check that the brake operates properly.

Safety precautions
Before commencing any work on the motor or device, but especially before opening covers in front of live components, always isolate the motor electrically according to the regulations. Apart from the main circuits also isolate any additional or auxiliary circuits.

The standard "5 safety rules", e.g. according to DIN VDE 0105, are:

- Isolate electrically
- Prevent equipment from being switched on again
- Check that there is no voltage
- Earth and short-circuit
- Cover any adjacent live components or prevent access with barriers

The above precautions may only be withdrawn when the maintenance work has been completed and the motor is fully assembled.
Inspect the motors properly at regular intervals. In particular look out for any physical damage, ensure that cooling passages are free, listen for any unusual noises, and ensure that electrical connections are performed in a proper manner.
With the exception of standardised, commercial or equivalent parts the only spare parts which may be used are genuine spare parts!

NOTE: Inasmuch as motors are provided with enclosed condensation ports, they must be opened from time to time so that any accumulated condensation can drain off. Condensation ports are always positioned at the lowest point of the motor. When installing the motor ensure that the condensation holes are at the bottom.

Bearing changes, grease filling
The period for changing bearings in operating hours [h] on IEC motors with coupling drive is as follows, under normal operating conditions and with the motor installed horizontally, depending on coolant temperature and motor speed:

	25°C	40°C
up to 1800 min^{-1}	approx. 40000 h	approx. 20000 h
up to 3600 min^{-1}	approx. 20000 h	approx. 10000 h

In the case of direct gearbox attachment or under special operating conditions, e.g. vertical motor, substantial vibrations or shock loads, frequent reversing, etc. the above-mentioned operating hours will be reduced considerably.

The motor must be subjected to a general overhaul every 5 years!

General overhaul

For this purpose the motor must be dismantled. Perform the following work:

- Clean all parts of the motor
- Inspect all parts of the motor for damage
- Replace all damaged parts
- Replace all antifriction bearings
- Replace all gaskets and shaft seals

The general overhaul must be performed in a specialised workshop with appropriate equipment and by qualified staff. We urgently recommend having the general overhaul performed by NORD Service.

5. Motors with protection type Increased Safety Exe

These motors are subject to the following supplementary or specific information.

The motors are suitable for use in Zone 1 and conform to equipment group II, category 2G, and can be used for an ambient temperature between -20°C and +40°C.

Type addition: 2G e.g.: 80 L/4 **2G** TF

The marking is CE 0102 Ex II 2G Ex e II along with the temperature class

If the motor is connected to a gearbox, the Ex marking of the gearbox must also be observed.
Explosive gas mixtures or concentrations of dust in conjunction with hot, live and moving parts on electrical machinery can cause serious or lethal injuries.
The increased hazard in explosive areas calls for particularly careful compliance with the general safety and commissioning instructions. The staff responsible must be trained regarding correct use of motors in explosive areas.
Explosion-proof electrical machines comply with the standards in series EN 60034 (VDE 0530) as well as EN 60079-0 and 60079-7. It is the degree of explosion risk which determines zone classification. DIN EN 60079, Part 10, provides information on this. It is the user who is responsible for zone classification.
If motors are not certified for explosive areas, it is prohibited to use them in explosive areas.

Cable entries must be approved for explosive atmospheres. Ports which are not used must be closed off with approved blind plugs.

When connecting up the installation lines to the motor terminals and the protective earth lead must be laid with U-shaped lines under the respective terminals so that the wire clamps and the terminal studs are subjected to uniform loading and are not deformed under any circumstances. Alternatively, the connections can be made with a cable lug. The use of aluminium connecting cables is not permissible.
The motor is supplied with a certified cable gland. The clamping nuts of the cable gland must be tightened to the torque specified in the following table.

Cable gland	Clamping nut tightening torque [Nm]
M20x1.5	6
M25x1.5	8
M32x1.5	12
M40x1.5	16

When connecting up always ensure that the permissible clearance distances of 10 mm and the permissible creepage distances of 12 mm between live components and housing potential and between individual live components are observed.

Before the terminal box is closed, make sure that all the nuts on the terminals and the screw on the protective earth terminal are tight. The terminal box gaskets and the seals on the cable gland must be fitted properly and must not be damaged in any way.

If the shaft end is at the top, e.g. designs IMV3 or IMV6, and the motor has Exe protection, the user/installer must fit a cover which prevents foreign bodies from falling into the motor fan hood (see DIN EN 60079-0). It must not impair cooling of the motor by its fan. A handwheel at the second shaft end is not permitted. If the shaft end is at the bottom, e.g. designs IMV1 or IMV5, the motors are generally provided with a protective roof on the fan hood. The motors are designed for continuous duty and normal, non-recurring start-ups in which no substantial start-up heat develops.

Area A in EN 60034-1 (VDE 0530 Part 1) - voltage ± 5%, frequency ± 2%, characteristic, mains symmetry - must be observed so that the development of heat remains within the limits permitted. Any major deviations from the ratings can caused an impermissible increase in the development of heat in the electric machine.
The motor temperature class stated on the name plate must at least conform to the temperature class of any combustible gas that may be emitted.

5. Motors with protection type Increased Safety Exe

Each machine must be protected against impermissible development of heat by a current-dependent delayed protective switch tested for operation by an appointed body, with phase-failure protection in compliance with VDE 0660 or an equivalent system in all phases. The protective system must be set to the rated current. If windings are connected in a delta circuit the trips must be connected in series with the winding phases and set to 0.58 times the rated current. If such a configuration is not possible, additional precautions will be necessary (e.g. thermal machine protection).
If the rotor jams, the protective system must shut down within the t_E-time specified for the respective temperature class.

Electric machines for heavy starting (ramp time > 1.7 x t_E-time) must be protected by a start-up monitoring system in accordance with the provisions of the EC type test certificate.
Thermal machine protection by means of direct thermal monitoring of the winding with PTC thermistor temperature sensor is permissible if it is certified and stated on the name plate.

Do not connect any voltage higher than 30V to the PTC thermistor temperature sensor!
If the only protection is a PTC thermistor temperature sensor, a performance-tested, certified PTC tripping unit from an appointed body must be used. The PTC tripping unit must be provided with the following marks concerning the degree of protection:

Ex II (2) G

In Germany reference is made to DIN 57165/VDE 0165 and ElexV for setting up electrical installations in explosive areas! In other countries the appropriate national regulations must be observed!

Operation in conjunction with an inverter must be explicitly certified. It is absolutely essential that the separate manufacturer's instructions be observed. For Exe protection the motor, inverter and protective systems must be identified as belonging together and the permissible operating data must be defined on the joint EC type test certificate. The levels of voltage peaks generated by the inverter may be subjected to unfavourable influences by the connecting cable installed between the inverter and the electric machine. In the system comprising inverter-cable-electric machine the maximum figure for voltage peaks at the connecting terminals on the machine must not be less than the figure specified in the separate manufacturer's instructions. In addition, the EMC Directive must also be observed.

Any repairs must be performed by NORD or accepted by an officially recognised independent expert. The work must be identified by means of an additional repair plate. With the exception of standardised, commercial and equivalent parts, the only spare parts which may be used are genuine spare parts (see spare parts list): this particularly applies to seals and connecting parts.
In the case of motors with closed condensation holes the threads of the plugs must be recoated with Loctite 242 or Loxeal 82-21 after condensation has been drained off. As soon as that has been done the plugs must be reinserted. Checking of electrical connections must be performed at regular intervals.
The connection terminals, protective earth terminal and equipotential bonding terminal must be inspected to make sure they are firm. When doing so, check to make sure that the cable entry, cable gland and terminal box gaskets are in good condition.

All work on electric machines must be performed with the machine vertical and with all terminals disconnected from the mains.

If installation resistance is being measured the motor must be removed. Measurement must not be performed in the explosive area. As soon as measurement has been completed discharge the connecting terminals again by shorting them in order to prevent any spark discharges occurring in the explosive area.

6.1 General information

The following information applies additionally or especially to motors in categones 2D and 3D!

The motors are suitable for use in Zone 21 (category 2D) or Zone 22 – non-conductive dusts (category 3D) according to their designation.

*Type addition: Zone 21: 2D e.g.: 80 L/4 **2D** TF*
*Zone 22: 3D e.g.: 80 L/4 **3D** TF*

The designation is as follows: CE 0102 Ex *II 2 D T 125°C for category 2 (Zone 21)**
Certification number: BVS 04 ATEX E 037

CE Ex *II 3 D T 125°C for category 3 (Zone 22 non-conductive dust)**

* the details of the surface temperature may deviate from 125°C and may be obtained from the name plate

If the motor is connected to a gear, the Ex designation of the gear must also be taken into account!

6.2 Safety information

The increased danger in areas with combustible dust requires that the general safety and commissioning instructions are strictly complied with. Explosive dust concentrations can cause explosions if ignited by hot or sparking objects and this can cause severe or even lethal injuries to persons and significant damage to property.
It is absolutely essential that the persons authorised to use these motors in hazardous areas are trained in their correct use.

6.3 Commissioning instructions / application area

The motors are suitable for use in Zone 21 (category 2D) or Zone 22 – non-conductive dusts (category 3D) according to their designation. If the motors are intended for inverter operation, this must be specified when ordering. The motors must be protected against overheating with suitable monitoring equipment! The dust levels must not exceed 5 mm! The motors are designed for the voltage and frequency range A as in EN 60034 Part 1.

Motors for use in Zone 21 and Zone 22, with labelling TF may be thermally monitored via the built-in PTC in combination with a suitable triggering device as the sole protection. Electrical equipment for use in areas with combustible dust complies with the standards EN 50281-1-1, EN 60034 and EN 50014. The level of explosion hazard is determined by the zone separation. The operator/employer is responsible for zone separation (guideline 1999/92/EC).

If the designation is supplemented by an X, special documentation in the EC type examination certificate must be complied with. It is forbidden to use standard motors in hazardous areas that are not authorised for use in hazardous areas. In Zone 21, the cable entries must be authorised for Ex areas (protection class minimum IP 66) and must be secured against accidental loosening. Unused apertures must be sealed with authorised plugs (minimum protection class IP 66).

For Zone 22, the cable glands must as a minimum correspond to the protection type specified on the name plate. Unused openings must be closed with plugs, which as a minimum correspond to the protection class of the motor.
The motor must not be opened under hazardous atmospheres to connect the electrical cables or for any other work. The voltage must always be switched off and secured against being switched on again before opening the motor!

If the motor is supplied with a certified cable gland, the clamping nuts of the cable gland must be tightened to the torque specified in the following table.

Cable gland	Clamping nut tightening torque [Nm]
M20x1.5	6
M25x1.5	8
M32x1.5	12
M40x1.5	16

The permissible ambient temperature range for all motors is -20°C...+40°C. A greater ambient temperature range of -20°C...+60°C is permissible with motors for operation in Zones 21 and 22. This does not however apply with the option brake and external fans! The rated power must then be reduced to 72% of the catalogue value. If the maximum value of the ambient temperature is between +40°C and +60°C, the value of the power consumption can be inversely interpolated linearly between 100% and 72%. Thermal motor protection with a PTC temperature sensor is essential here. The motor connection cables and the cable glands must be suitable for temperatures ≥ 90°C.

IEC-B14 motors

The B14 flanged bearing plate must be covered with a protective foil which must be removed before the motor is fastened in place. All four fixing screws, even if not required, must be screwed into the flanged bearing plate! The fixing screw threads must be inserted with a sealant, e.g. Loctite 242. The maximum screw-in depth in the bearing plate is 2 x d.

If the shaft end faces upwards, e.g. models IMV3, IMV6, a cover must be positioned on the motor by the operator/installer to prevent foreign bodies from falling into the motor ventilation cover (see DIN EN 50 280-1-1). It must not hinder the motor from being cooled by the fans. Where shaft ends face down, e.g. models IMV1, IMV5, the motors for Zone 21 are generally equipped with a protective roof on the ventilation cover. A handwheel on the second shaft end is not permitted.
Unless otherwise specified for operating modes and tolerances in the test certificate or name plate, electrical machinery is designed for continuous operation and normal infrequent start-ups where insignificant start-up heating occurs. The motors may only be used for the operating mode specified on the name plate.
The installation regulations must be complied with!

6.4 Structure and operating mode

The motors are self-cooling. Rotary shaft seals are fitted both on the drive side (DS) and on the ventilation side (VS).
Motors for Zone 21 and Zone 22 have metal fans. The motors are designed for protection class IP 55 (Zone 22 - non-conductive dust) or IP 66 (Zone 21). Under normal operating conditions the surface temperature does not exceed that stated on the name plate.

6.5 Minimum cross-sections of ground leads

Cross-section of phase conductor in installation S in mm²	Minimum cross-section of the associated ground lead S_P in mm²
$S \leq 16$	S
$16 < S \leq 35$	16
$S > 35$	$0.5\,S$

When connecting a lead to the external ground, the minimum cross-section must be 4 mm²

6.6 Maintenance

The voltage must always be switched off and secured against being switched on again!
Attention! Higher temperatures than the maximum permitted surface temperature of the housing may be present inside the motor. The motor must therefore never be opened in hazardous dust atmospheres!
The motors must be checked and tested regularly for functional safety! The applicable national standards and regulations must be complied with!

Unpermitted high dust deposits > 5 mm may not be allowed to build up! If functional safety cannot be ensured, the motor may not be operated!
When the ball bearings are replaced, the rotary shaft seals must also be replaced. FKM rotary shaft seals as specified by Getriebebau NORD must be used. Ensure that they are fitted correctly!
The rotary shaft seals must be lubricated on the external rings and on the seal lips. If an explosion protected gear is flanged dust-tight to the motor, an NBR rotary shaft seal can be used on the drive side of the motor if the gear oil temperature does not exceed 85°C.
Only original parts may be used as spare parts with the exception of standardised, commercially available and equivalent parts. This also applies in particular to seals and connection components. Parts for terminal boxes or spare parts for external grounding must be ordered as per the spare parts list in the operating instructions.
The functionality of seals, rotary shaft seals and cable glands must be regularly checked!
Maintaining dust protection for the motors is of paramount importance for explosion protection.
Maintenance must be implemented by qualified personnel in a specialist workshop with suitable equipment. We urgently recommend that general overhauls are implemented by NORD Service.

ATTENTION!
Section 7 of these operating instructions applies as a supplement for IE2-ATEX motors for Zone 21 and Zone 22 as per EN 60079-0 and DIN EN 60079-31. Please disregard Section 6 for these motors.

7.1 General information

The following information applies additionally or especially to motors in categories 2D and 3D!

The motors are suitable for use in Zone 21 (category 2D) or Zone 22 – non-conductive dusts (category 3D) according to their designation.

Type addition: Zone 21: 2D e.g.: 80 L/4 **2D** TF
Zone 22: 3D e.g.: 80 L/4 **3D** TF

The designation is as follows:

*II 2 D Ex tb IIIC T125°C Db for Category 2 (Zone 21)**

*II 3 D Ex tc IIIB T125°C Dc for Category 3 (Zone 22, non-conducting dust)**

* the details of the surface temperature may deviate from 125°C and may be obtained from the name plate
If the motor is attached to a gear unit, the EX labelling of the gear unit must also be observed!

7.1.2 Impact test

*As per **26.4.2** of EN 60079-0 (2009 version), motors for Category 3D are subjected to an impact test with **4J**.*

7.2 Safety information

The increased danger in areas with inflammable dust demands the strict observation of the general safety and commissioning information. Explosive concentrations of dust may cause explosions if ignited by hot or sparking objects. Such explosions may cause serious or fatal injuries to persons or severe material damage. It is absolutely essential that the persons responsible for the use these motors and frequency inverters in explosion hazard areas are trained in their correct use.

7.3 Commissioning information / Field of application

If the motors are required for use with frequency inverters, this must be stated in the order. The motors must be protected against overheating with suitable monitoring equipment! The thickness of dust deposits must not exceed 5 mm! The motors are designed for the voltage and frequency range B of EN 60034 Part 1.
Motors for use in Zone 21 and Zone 22, with labelling TF may be thermally monitored via the built-in PTC in combination with a suitable triggering device as the sole protection.
Electrical equipment for use in areas with combustible dust comply with the standards DIN EN 60079-0, EN 60079-31 and DIN EN 60034. The valid version of the standard can be seen from the EEC Declaration of Conformity. The degree of explosion hazard determines the zone categorisation. The operator / employer is responsible for the assignment of zones (RL 1999/92/EEC)
If the certification is supplemented with an "X" the special conditions in the EEC prototype certification and/or the relevant documentation must be observed. The use of standard motors which are not certified for explosion hazard areas in explosion hazard areas is prohibited.

The terminal box cover is covered on one side with a very thin film of grease. This grease film prevents the seal from adhering to the frame of the terminal box and must not be removed. This grease film must also be applied using a suitable grease, if the seal is replaced.

7.3.1 Electrical Connection

The electrical connections of the terminal board are protected against twisting. The voltage supply to the terminal board must be made by means of suitable ring terminals. The ring terminals are installed between the two brass washers below the lock washer. The nuts must be tightened with a torque according to the table below. The contact pressure is permanently maintained by means of the specified torque and the lock washer. In addition, twisting of the ring terminals of the voltage supply is prevented. The connection elements are corrosion-proof.

Torques for Electrical Terminal Board Connections	
Rated thread diameter	Tightening torque [Nm]
M1.6	0.09-0.12
M3	0.35-0.5
M4	0.8-1.2
M5	1.8-2.5
M6	2.7-4.0
M8	5.5-8.0
M10	9.0-13.0
M12	16.0-20.0
M16	36.0-40.0

Electrical connection:

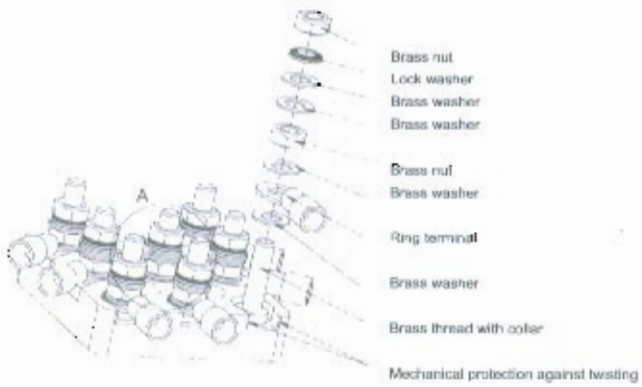

7.3.2 Cable and wiring glands

In Zone 21, the cable entries must be authorised for Ex areas (protection class minimum IP 66) and must be secured against accidental loosening. Unused apertures must be sealed with authorised plugs (minimum protection class IP 66). As delivered, the motors are equipped with a blank screw cap and a plastic cap. The plastic cap must be replaced with a certified cable gland.
For Zone 22, the cable glands must as a minimum correspond to the protection type specified on the name plate. Unused openings must be closed with plugs, which as a minimum correspond to the protection class of the motor and the requirements of EN 60079-0. The cable glands and blank plugs must be suitable for a temperature of at least 100°C.

The motor must not be opened under hazardous atmospheres to connect the electrical cables or for any other work. The voltage must always be switched off and secured against being switched on again before opening the motor!
The motors are equipped with cable glands according to the following overview.

Assignment of Cable Glands to Motor Size													
Cable glands for standard motors							Cable glands for brake motors						
Type	Number	Thread	Number	Thread	Number	Thread	Type	Number	Thread	Number	Thread	Number	Thread
63	2	M20x1.5					63	4	M20x1.5	2	M12x1.5		
71	2	M20x1.5					71	4	M20x1.5	2	M12x1.5		
80	2	M25x1.5					80	4	M25x1.5	2	M12x1.5		
90	2	M25x1.5					90	4	M25x1.5	2	M12x1.5		
100	2	M32x1.5					100	4	M32x1.5	2	M12x1.5		
112	2	M32x1.5					112	4	M32x1.5	2	M12x1.5		
132	2	M32x1.5					132	4	M32x1.5	2	M12x1.5	2	M16x1.5
160/ 180/ .X	2	M40x1.5	2	M12x1.5	2	M16x1.5	160/ 180/ .X	2	M40x1.5	2	M12x1.5	2	M16x1.5
180/ 200/ .X	2	M40x1.5	2	M12x1.5	2	M16x1.5	180/ 200/..X	2	M40x1.5	2	M12x1.5	2	M16x1.5
200	2	M40x1.5	2	M12x1.5	2	M16x1.5	200	2	M40x1.5	2	M12x1.5	2	M16x1.5

If the motor is supplied with a certified cable gland, the clamping nuts of the cable gland must be tightened to the torque specified in the following table.

Cable gland	Clamping nut tightening torque [Nm]
M20x1.5	6
M25x1.5	8
M32x1.5	12
M40x1.5	16

7.3.3 Permissible Ambient Temperature Range

*The permissible ambient temperature range for all motors is -20°C ..+40°C. A greater ambient temperature range of -20°C...+**60**°C is permissible with motors for operation in Zones 21 and 22. This does not however apply with the option brake and external fans! In this case, the rated power must be reduced to **72%** of the value stated in the catalogue. If the maximum ambient temperature is between +40°C and +**60**°C, the power output should be inversely linearly interpolated between **100%** and **72%**. In this case thermal protection of the motor by means of a thermistor sensor is essential. The motor connection cables and the cable glands must be suitable for temperatures of at least 100°C.*

7.3.4 Painting

Motors for Zone 21 and Zone 22 are provided with suitable painting ex-works.
Subsequent painting may only be carried out after consultation with Getriebebau NORD or a workshop which is approved for the repair of explosion protected motors. Compliance with the valid standards and regulations is mandatory.

7.3.5 IEC-B14 Motors

The B14 flanged bearing plate must be covered with a protective foil which must be removed before the motor is fastened in place. All four fixing screws, even if not required, must be screwed into the flanged bearing plate! The fixing screw threads must be inserted with a sealant, e.g. Loctite 242. The maximum screw-in depth in the bearing plate is 2 x d.

If the end of the shaft faces upwards, e.g. version IMV3, IMV6, a cover must be provided by the operator / installer, which prevents foreign bodies from falling into the fan cover of the motor (see DIN EN 60079-017, item 17). This must not obstruct the fan from cooling the motor. If the end of the shaft faces downwards, e.g. versions IMV1, IMV5, motors for Zone 21 and Zone 22 are provided with a protective cover on the fan cover. A hand wheel on the second end of the shaft is not permitted for versions with the "shaft end downwards".
Unless otherwise specified for operating modes and tolerances in the test certificate or name plate, electrical machinery is designed for continuous operation and normal infrequent start-ups where insignificant start-up heating occurs. The motors may only be used for the type of operation stated on the name plate.
The installation instructions must be strictly observed.

7.4 Structure and method of use

The motors are self-cooling. Rotary shaft seals are fitted both on the drive side (DS) and on the ventilation side (VS). Motors for Zone 21 and Zone 22 have metal fans. Motors with brakes for Zone 22 (Category 3D, non-conducting dust) have a special plastic fan. The motors are produced as protection class IP55, optionally protection class IP 66, (Zone 22 – non-conducting dust) or IP66 (Zone 21). Under normal operating conditions, the surface temperature does not exceed the surface temperature stated on the name plate.

7.5 Minimum cross section of bonding conductors

Cross-section of phase conductor in installation S in mm^2	Minimum cross-section of the associated ground lead S_P in mm^2
$S \leq 16$	S
$16 < S \leq 35$	16
$S > 35$	$0.5\,S$

When connecting a lead to the external ground, the minimum cross-section must be 4 mm^2.

7.6 Maintenance

The voltage must always be switched off and secured against being switched on again before opening the motor!
Attention! Higher temperatures than the maximum permitted surface temperature of the housing may be present inside the motor. The motor must therefore never be opened in hazardous dust atmospheres! The motors must be checked and tested regularly for functional safety! The applicable national standards and regulations must be complied with!
Unpermitted high dust deposits > 5 mm may not be allowed to build up! If functional safety cannot be ensured, the motor may not be operated! When the ball bearings are replaced, the rotary shaft seals must also be replaced. FKM rotary shaft seals as specified by Getriebebau NORD must be used. Ensure that they are fitted correctly! The rotary shaft seals must be lubricated on the external rings and on the seal lips. If an explosion protected gear is flanged dust-tight to the motor, an NBR rotary shaft seal can be used on the drive side of the motor if the gear oil temperature does not exceed 85°C. Only original parts may be used as spare parts with the exception of standardised, commercially available and equivalent parts. This also applies in particular to seals and connection components. Parts for terminal boxes or spare parts for external grounding must be ordered as per the spare parts list in the operating instructions.
The functionality of seals, rotary shaft seals and cable glands must be regularly checked!
Maintaining dust protection for the motors is of paramount importance for explosion protection.
Maintenance must be implemented by qualified personnel in a specialist workshop with suitable equipment. We urgently recommend that the general overhaul is carried out by NORD Service.

8.1 Option inverter operation

ATEX NORD motors for Zone 22 are suitable for inverter operation due to their insulation system design. Because of the variable rpm range, temperature monitoring with PTC resistors or temperature monitors is necessary. For safe engineering and application, comply with the engineering guideline "Operation of ATEX motors with frequency inverters", No. 605 2101. The engineering guideline provides information about the necessary requirements for inverter operation and about the permitted rpm ranges.

8.2 Option external fan

*Motors with the additional designation F (e.g. 80S/4 3D **F**) are equipped with an external fan and must be monitored via the integrated temperature sensor.*

⚠ *Attention!*
The motor may only be operated together with the external fan! A failure of the external fan can lead to the motor overheating and therefore endanger property/persons.
Comply with the operating instructions for the external fan!

The power supply for the external fan is provided independently via the external fan terminal box. The external fan power supply must be identical to the voltage rating given on the name plate. The external fans must be protected against overheating with suitable monitoring equipment! The IP protection classes of the external fan and motor may be different. The lower IP protection class applies to the drive unit. The cable glands must as a minimum correspond to the protection type specified on the name plate. Unused openings must be closed with plugs, which as a minimum correspond to the protection class of the motor.

External fans and motors for use in hazardous areas have an Ex designation as per guideline 94/9 EC. This designation must be present on the external fan and on the motor. If the designations of the external fan and the motor differ, the lowest designated explosion protection applies to the entire drive. The maximum specified temperature given in the surface temperature data for the individual components applies for the entire drive unit. In this case, it may be necessary to take into account any gears that may be present. Contact Getriebebau NORD if there are any doubts.

If any component in the entire drive does not have an Ex designation, then the entire drive may not be operated in an Ex area.

8.3 Option return stop

*Motors with the additional designation RLS (e.g. 80S/4 3D **RLS**) are equipped with a return stop.*

Motors with return stops have an arrow marking the direction of rotation on the ventilation cover. The arrow points in the rotation direction of the motor. It must be ensured, when connecting the motor and during motor control, that the motor can only operate in the rotation direction, e.g. by means of a rotary field test.
Switching the motor to the blocked rotation direction, i.e. incorrect rotation direction, can lead to damage.

Return stops operate without wear from a speed of ca. 800 1/min.. Return stops must not be operated at speeds under 800 1/min to prevent unpermitted heating and rapid wear of the return stop. This must be taken into account for motors with a frequency of 50 Hz and poles ≥ 8, and for motors with frequency inverters.

8.4 Option brake

Motors with the additional designation BRE (e.g. 80S/4 3D BRE 10) are equipped with a brake and must be monitored via the integrated temperature sensor. If the temperature sensor of one of the components (motor or brake) is triggered, the entire drive must be securely shutdown. The motor and brake PTC's must be switched in series.

⚠ *Attention!*
The brake DC voltage supply must be implemented via a rectifier located in the motor terminal box or via a directly supplied voltage. The brake voltage shown on the name plate must be complied with.
The power supply lines must not be laid in a cable together with the temperature sensor circuit. The brake functionality must be checked before start-up. There should be no grinding noises, as this could lead to unpermitted excessive heating.

9. Spare parts drawing and spare parts list

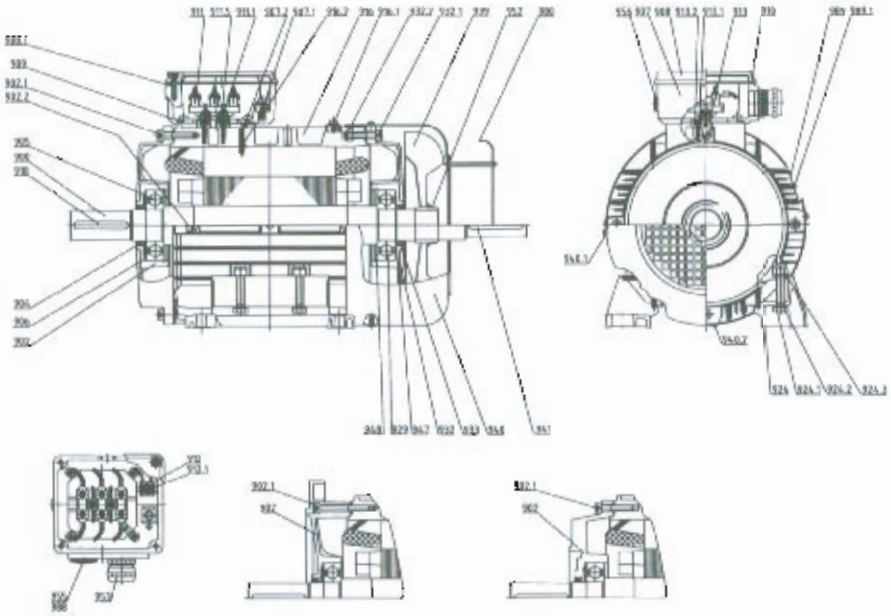

Item No.	Description
900	Rotor with shaft
902	End shield at drive end
902.1	Cheese-head screw
902.2	Hexagon nut
904	Shaft seal
905	Bearing at drive end
906	Ball bearing shim
907	Terminal box frame
907.1	Chassis connection terminal wire clamp
907.2	Oval-head screw
908	Terminal box lid
908.1	Cheese-head screw
909	Terminal box frame gasket
910	Terminal box lid gasket
911	Terminal board
911.1	Cheese-head screw
911.5	Spring lock washer
912	Mini-terminal
912.1	Oval-head screw
913	Spacer
913.1	Cheese-head screw
913.2	Spring lock washer
916	Stator with winding
916.1	Equipotential bonding terminal
916.2	Spring pin

Item No.	Description
918	Key
924	Screw-on foot (BG 100-132)
924.1	Hexagon bolt
924.2	Spring lock washer
924.3	Hexagon nut
929	Bearing at ventilation end
932	End shield at ventilation end
932.1	Cheese-head screw
932.2	Hexagon nut
933	Shaft seal
939	Fan
940	Fan hood
940.1	Oval-head screw
940.2	Countersink screw B3
941	Key
942 947	Circlip
948	Circlip
952	Clamping bush
953	Cable gland
955	Blind plug
956	Blind plug
980	Protective roof
988	Ring seal
989	Name plate
989.1	Oval-head screw

10. Conformity declaration

Conformity declaration
(as per guideline 94/9/EC appendix VIII)

Getriebebau NORD
GmbH&Co.KG
Rudolf-Diesel Str. 1
D-22941 Bargteheide
Tel.: +49 (0) 4532 / 401 - 0
Fax: +49 (0) 4532 / 401 - 253
http:\\www.nord.com
info@nord-de.com

Getriebebau NORD has sole responsibility for issuing this EC conformity declaration. *The declaration is not an assurance in terms of product liability.*

Product Three-phase asynchronous motor with cage rotor in device group II, category 2D
SK 63S/4 2D to SK 132M/40 2D

Getriebebau NORD declares the conformity of the above named product with the following guidelines.
94/9/EC

Applied standards: EN 60034, EN 50281-1-1, EN 50014

Notified body: Physikalisch-Technische Bundesanstalt (PTB)
Bundesallee 100
38116 Braunschweig, Germany
ID number: 0102

Getriebebau NORD
GmbH&Co.KG

Bargteheide, 27.08.2004
Place and date of issue

U. Küchenmeister, Managing director

i.V. Dr. B. Bouché, Engineering manager

Conformity declaration

(as per guideline 94/9/EC appendix VIII)

Getriebebau NORD
GmbH&Co KG
Rudolf-Diesel Str. 1
D-22941 Bargteheide
Tel. +49 (0) 4532 / 401 - 0
Fax. +49 (0) 4532 / 401 – 253
http://www.nord.com
info@nord-de.com

Getriebebau NORD has sole responsibility for issuing this EC conformity declaration. *The declaration is not an assurance in terms of product liability.*

Product Three-phase asynchronous motor with cage rotor in device group II, category 3D
SK 63S/4 3D to SK 132M/40 3D

Getriebebau NORD declares the conformity of the above named product with the following guidelines:
94/9/EC

Applied standards: EN 60034, EN 50281-1-1, EN 50014

Getriebebau NORD
GmbH&Co.KG

Bargteheide, 27.08.2004
Place and date of issue

U Küchenmeister, Managing director i.V. Dr. B. Bouché, Engineering manager

Conformity declaration

(as per guideline 94/9/EC appendix VIII)

Getriebebau NORD
GmbH&Co.KG
Rudolf-Diesel Str. 1
D-22941 Bargteheide
Tel. +49 (0) 4532 / 401 - 0
Fax. +49 (0) 4532 / 401 – 253
http://www.nord.com
info@nord-de.com

Getriebebau NORD has sole responsibility for issuing this EC conformity declaration. *The declaration is not an assurance in terms of product liability*

Product Three-phase asynchronous motor with cage rotor in device group II, category 2G
SK 80S/4 2G and SK 80L/4 2G

Getriebebau NORD declares the conformity of the above named product with the following guidelines:
94/9/EC

Applied standards: EN 60034, EN 60079-0, EN 60079-7

Notified body: Physikalisch-Technische Bundesanstalt (PTB)
Bundesallee 100
38116 Braunschweig, Germany
ID number 0102

Getriebebau NORD
GmbH&Co.KG

Bargteheide, 07.07.2008
Place and date of issue

U Küchenmeister, Managing director i.V. Wiedemann, Manager of electric motors

10. Conformity declaration

Getriebebau NORD GmbH & Co. KG
Rudolf-Diesel-Str. 1, D-22941 Bargteheide, Germany
Telephone: +49 (0) 4532-401-0 Fax: +49 (0) 4532-401-555 http://www.nord.com

DRIVESYSTEMS

EC Declaration of Conformity

According to Directive 94/9/ EEC Annex VII

We, Getriebebau Nord GmbH & Co. KG hereby declare
that the surface-cooled three-phase asynchronous motors with squirrel cage rotor

Type SK 80*H/4 3D, SK 90*H/4 3D, SK 100*H/4 3D,
SK 112*H/4 3D, SK 132*H/4 3D

* Power code (e.g. S, M, L, A)

comply with the following regulations:

94/9/EG
Directive for the harmonisation of statutory regulations of member states for devices and protective systems for proper use in explosion hazard areas

Applied harmonised standards:

EN 60079-0: 2009
EN 60079-31: 2009

Initial labelling was carried out in 2011.

Bargteheide, 19.08.2011

U. Küchenmeister:
Manager

i.V. F. Wiedemann
Head of Motors Division

NORD Drivesystems | Global vor Ort

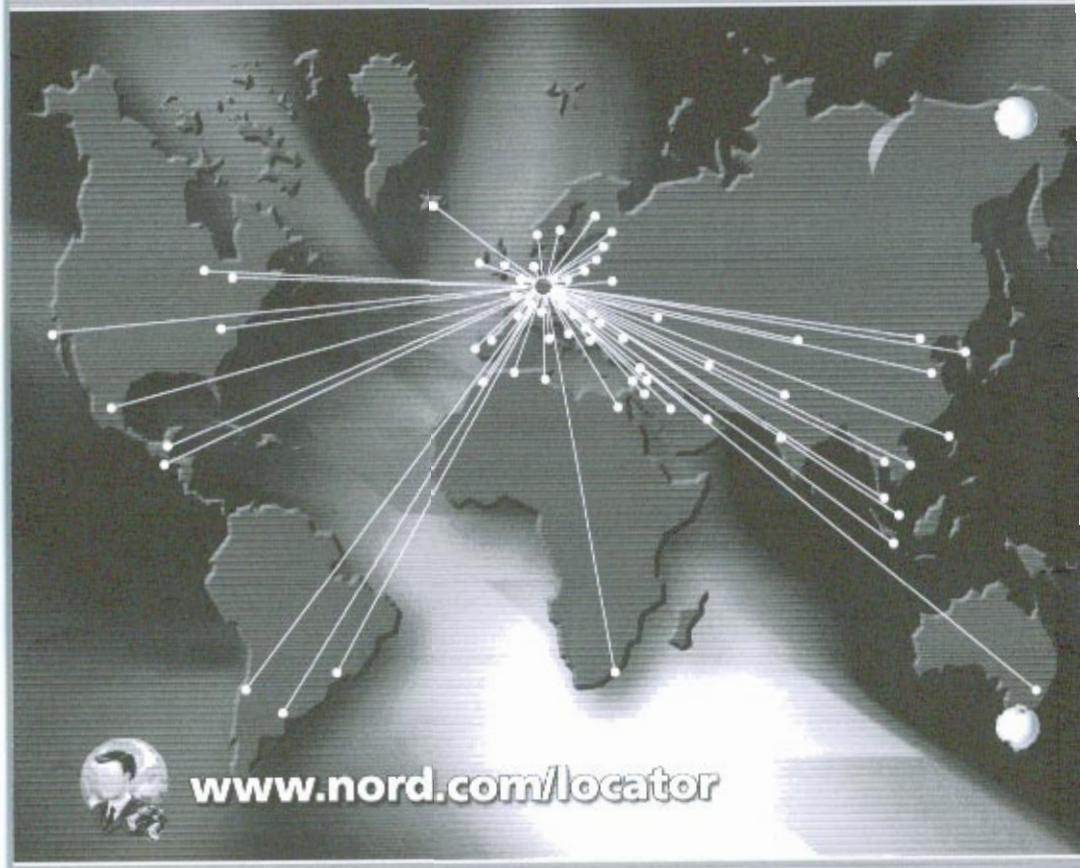

Headquarters:

Getriebebau NORD GmbH & Co. KG
Rudolf-Diesel-Straße 1
D - 22941 Bargteheide
Fon +49 (0) 4532 / 401 -0
Fax +49 (0) 4532 / 401 -253
info@nord.com
www.nord.com

NORD
DRIVESYSTEMS

Contents

1. Notes **4**
1.1 General information 4
1.2 Safety and information symbols 4
1.3 Correct use 4
1.4 Safety information 5
1.5 Other documents 6
1.6 Disposal 6

2. Description of gear units **7**
2.1 Type designations and gear unit types 7
2.2 Name plate 8

3. Assembly instructions, storage, preparation, installation **9**
3.1 Storing the gear unit 9
3.2 Long-term storage 9
3.3 Transporting the gear unit 10
3.4 Preparing for installation 10
3.5 Installing the gear unit 11
3.6 Fitting hubs on the gear shafts 12
3.7 Fitting push-on gear units 13
3.8 Fitting shrink discs 15
3.9 Fitting the covers 16
3.10 Fitting a standard motor 17
3.11 Retrospective paintwork 18
3.12 Fitting the cooling coil to the cooling system 19

4. Commissioning **20**
4.1 Checking the oil level 20
4.2 Activating the automatic lubricant dispenser 20
4.3 Operation with lubricant cooling 21
4.4 Running-in time for the worm gear unit 21
4.5 Checklist 21

5. Service and maintenance **22**
5.1 Service and maintenance intervals 22
5.2 Service and maintenance work 22

6. Appendix **26**
6.1 Versions and maintenance 26
6.2 Torque values 37
6.3 Troubleshooting 37
6.4 Lubricants 38
6.5 Lubricant quantities 40

1. Notes

1.1 General information

Read the Operating Manual carefully prior to performing any work on or putting the gear unit into operation. Strict compliance with the instructions in this Operating Manual is essential. Getriebebau NORD accepts no liability for damage to persons, materials or assets as a result of the non-observance of this Operating Manual, operating errors or incorrect use. General wearing parts, e.g. radial seals are excluded from the warranty.

If additional components are attached to or installed in the gear unit (e.g. motor, cooling system, pressure sensor etc.) or components (e.g. cooling system) are supplied with the order, the operating instructions for these components must be observed.

If geared motors are used, compliance with the Motor Operating Manual is also necessary.

If you do not understand the contents of this Operating Manual or additional operating instructions, please consult Getriebebau NORD!

1.2 Safety and information symbols

Please always observe the following safety and information symbols!

⚠	**Danger!** **Risk of fatalities and injury**
STOP	**Attention!** **Machine may be damaged**
i	**Note!** **Useful information**

1.3 Correct use

These gear units generate a rotational movement and are intended for use in commercial systems. The gear unit must only be used according to the information in the technical documentation from Getriebebau NORD.

⚠	**Danger!** **Use in explosion hazard areas is prohibited.**

Strict compliance with the technical data on the rating plate is essential.

The documentation must be observed.

Appropriate safety measures must be taken for applications where failure of a gear unit or geared motor may result in injury.

1.4 Safety information

All work including transportation, storage, installation, electrical connection, commissioning, servicing, maintenance and repair must be performed **only by qualified specialist personnel.** It is recommended that repairs to NORD Products are carried out by the NORD Service department.

⚠	**Danger!** Installation and maintenance work must only be performed when gear units are at a standstill and have cooled down. The drive must be isolated and secured to prevent accidental start-up Tighten the drive elements or secure the parallel key before switching on.

⚠	**Danger!** Only transport use the eyebolts attached to the gear unit. No additional loads may be attached. Transportation aids and lifting gear must have an adequate load-bearing capacity.

If geared motors have an additional eyebolt attached to the motor, this must also be used. Avoid pulling the eyebolts at an angle. The thread of the eyebolt must be fully screwed in.

Observe all safety information, including that provided in the individual sections of this Operating Manual. All national and other regulations on safety and accident prevention must also be observed.

⚠	**Danger!** **Serious physical and property damage** may result from inappropriate installation, non-designated use, incorrect operation, non-compliance with safety information, unauthorised removal of housing components or safety covers and structural modifications to the gear unit.

1.5 Other documents

Further information may be obtained from the following documents:

- Gear unit catalogues (G1000, G2000, G1011, G1012, G1034, G1035)
- Operating and maintenance instructions for the electric motor
- if applicable, operating instructions for attached or supplied options

1.6 Disposal

Observe the current local regulations. In particular, lubricants must be collected and disposed of correctly.

Gear unit components:	Material:
Toothed wheels, shafts, rolling bearings, parallel keys, locking rings, ...	Steel
Gear unit housing, housing components, ...	Grey cast iron
Light alloy gear unit housing, light alloy gear unit housing components, ...	Aluminium
Worm gears, bushes, ...	Bronze
Radial seals, sealing caps, rubber components, ...	Elastomers with steel
Coupling components	Plastic with steel
Flat seals	Asbestos-free sealing material
Gear oil	Additive mineral oil
Synthetic gear oil (rating plate code: CLP PG)	Polyglycol-based lubricants
Cooling spiral, embedding material of the cooling spiral, screw fittings	Copper, epoxy, yellow brass

2. Description of gear units

2.1 Type designations and gear unit types

	Versions / Options
Helical gear units SK 11E, SK 21E, SK 31E,SK 41E, SK 51E (single-stage) SK 02, SK 12, SK 22, SK 32, SK 42, SK 52, SK 62N (2-stage) SK 03, SK 13, SK 23, SK 33N, SK 43, SK 53 (3-stage) SK 62, SK 72, SK 82, SK 92, SK 102 (2-stage) SK 63, SK 73, SK 83, SK 93, SK 103 (3-stage)	- Foot mounting with solid shaft A Hollow shaft version V Solid shaft version L Solid shaft both sides Z Drive flange B14 F Output flange B5
NORDBLOC helical gear units SK 320, SK 172, SK 272, SK 372, SK 472, SK 572, SK 672, SK 772, SK 872, SK 972 (2-stage) SK 273, SK 373, SK 473, SK 573, SK 673, SK 773, SK 873, SK 973 (3-stage) SK 072.1, SK 172.1, SK 372.1, SK 572.1, SK 672.1, SK 772.1 SK 872.1, SK 972.1 (2-stage) SK 373.1, SK 573.1, SK 673.1, SK 773.1, SK 873.1, SK 973.1 (3-stage)	X Foot mounting XZ Base and output flange B14 XF Base and output flange B5 AL Reinforced axial drive bearings 5 Reinforced output shaft (Standard helical gear unit) V Reinforced drive shaft (Standard helical gear unit)
Standard helical gear units SK 0, SK 01, SK 20, SK 25, SK 30, SK 33 (2-stage) SK 010, SK 200, SK 250, SK 300, SK 330 (3-stage)	D Torque support K Torque console S Shrink disc
Parallel shaft gear units SK 0182NB, SK 0282NB, SK 1282, SK 2282, SK 3282, SK 4282, SK 5282, SK 6282, SK 7282, SK 8282, SK 9282, SK 10282, SK 11282 (2-stage) SK 1382NB, SK 2382, SK 3382, SK 4382, SK 5382, SK 6382, SK 7382, SK 8382, SK 9382, SK 10382, SK 11382, SK 12382 (3-stage)	VS Reinforced shrink disc EA Hollow shaft with internal spline G Rubber buffer VG Reinforced rubber buffer R Back stop
Bevel gear units SK 92072, SK 92172, SK 92372, SK 92672, SK 92772 (2-stage) SK 9012.1, SK 9016.1, SK 9022.1, SK 9032.1, SK 9042.1, SK 9052.1, SK 9062.1, SK 9072.1, SK 9082.1, SK 9086.1, SK 9092.1, SK 9096.1 (3-stage) SK 9013.1, SK 9017.1, SK 9023.1, SK 9033.1, SK 9043.1, SK 9053.1 (4-stage)	B Fixing element H Covering cap as contact guard H66 Covering cap IP66 VL Reinforced bearings VL2 Agitator design VL3 Drywell agitator design
Contrate worm gear unit SK 02040, SK 02050, SK 12063, SK 12080, SK 32100,SK 42125 (2-stage) SK 13050, SK 13063, SK 13080, SK 33100, SK 43125 (3-stage)	IEC Standard motor mounting NEMA Standard motor mounting W With free drive shaft VI Viton radial seals OA Oil expansion vessel OT Oil level tank
MINIBLOC worm gear units SK1 S32, SK1 S40, SK 1S50, SK 1S63, SK 1SU SK 1SM31, SK 1SM40, SK 1SM50, SK 1SM63 (single-stage) SK 2S32NB, SK 2S40NB, SK 2S50NB, SK 2S63NB, SK 2SU..., SK 2SM40, SK 2SM50, SK 2SM63 (2-stage)	SO1 Synthetic oil ISO VG 220 CC Casing cover with cooling spiral DR Spring Loaded Breather H10 Modular contrate pre-stage /31 Worm pre-stage /40 Worm pre-stage
UNIVERSAL worm gear units SK 1SI31, SK 1SI40, SK 1SI50, SK 1SI63, SK 1SI75, SK 1SIS31, ..., SK 1SIS75, SK 1SD31, SK 1SD40,SK 1SD50, SK 1SD63, SK 1SIS-D31,.... SK 1SIS-D63 (single-stage) SK 2SD40, SK 2SD50, SK 2SD63, SK 1SI.../31, SK 1SI.../H10, SK 2SIS-D40,..., SK 2SIS-D63 (2-stage)	

Double gear units consist of two single gear units. They are to be treated as per the instructions in this Manual, i.e. as two individual gear units. Type designation of double gear units: e.g. SK 73/22 (consisting of single gears SK 73 and SK 22)

2.2 Name plate

Explanation of the Name Plate

1	Matrix – Barcode
2	NORD gear unit type
3	Operating mode
4	Year of manufacture
5	Serial number
6	Rated torque of gear unit output shaft
7	Drive power
8	Weight according to ordered version
9	Overall gear unit ratio
10	Installation orientation
11	Rated speed of gear unit output shaft
12	Lubricant type, viscosity and quantity
13	Customer's part number
14	Operating factor

3. Assembly instructions, storage, preparation, installation

Please observe all of the general safety information in Section 1.4, 1.3 and in the individual sections.

3.1 Storing the gear unit

For short-term storage before commissioning, please observe the following:

- Store in the fitting position (see Section 6.1) and secure gear units against falling
- Lightly grease bare metal housing surfaces and shafts
- Store in dry rooms
- Temperature must not fluctuate beyond the range of –5 °C to +40 °C
- Relative humidity less than 60%
- No direct exposure to sunlight or UV light
- No aggressive, corrosive substances (contaminated air, ozone, gases, solvents, acids, alkalis, salts, radioactivity etc.) in the immediate vicinity
- No vibration or oscillation

3.2 Long-term storage

Note!

For storage or standstill periods in excess of 9 months, Getriebebau NORD recommends the long-term storage option. With the long-term storage option and the use of the measures listed below, storage for up to 2 years is possible. As the actual influences on the unit greatly depend on the local conditions, these times should only be regarded as guide values.

Conditions of the gear unit and storage area for long-term storage prior to commissioning:

- Store in the fitting position (see Section 6.1) and secure gear units against falling
- Transportation damage to the external paint must be repaired. Check that a suitable rust inhibitor is applied to the flange bearing surfaces. If necessary apply a suitable rust inhibitor to the surfaces.
- Gear units with the long-term storage option are completely filled with lubricant or have VCI corrosion protection agents added to the gear oil. (See label on gear unit)
- The sealing band in the vent plug must not be removed during storage. The gear unit must remain sealed tight.
- Store in a dry place.
- In tropical regions, the drive unit must be protected against damage by insects
- Temperature must not fluctuate beyond the range of –5 °C to +40 °C
- Relative humidity less than 60%
- No direct exposure to sunlight or UV light
- No aggressive, corrosive substances (contaminated air, ozone, gases, solvents, acids, alkalis, salts, radioactivity etc.) in the immediate vicinity
- No vibration or oscillation

Measures during storage or standstill periods

- If the relative humidity is <50% the gear unit can be stored for up to 3 years.

Measures before commissioning

- If the storage or standstill period exceeds 2 years or the temperature during short-term storage greatly deviates from the standard range, the lubricant in the gear unit must be replaced before commissioning.
- If the gear unit is completely filled, the oil level must be reduced before commissioning

3.3 Transporting the gear unit

Danger!

To prevent injury, **the danger area must be generously cordoned off.** Standing under the gear unit during transport is **extremely dangerous.**

Attention!

Avoid damage to the gear unit. Impacts to the free ends of the shafts may cause internal damage to the gear unit.

Use adequately dimensioned and **suitable means of transportation**. Lifting tackle must be designed for the weight of the gear unit. The weight of the gear unit can be obtained from the dispatch documents.

3.4 Preparing for installation

The drive unit must be inspected and may only be installed if no transportation damage or leaks are visible. In particular the radial seals and the sealing caps must be inspected for damage.

All bare metal surfaces and shafts of the gear unit are protected against corrosion with oil, grease or corrosion protection agents before shipping

Thoroughly remove all oil, grease or corrosion protection agents and any dirt from the shafts and flange surfaces before assembly.

In applications where an incorrect rotational direction may result in damage or potential risk, the correct rotational direction of the drive shaft is to be established by test running the drive when uncoupled and guaranteeing such for subsequent operation.

Gears with integrated return stops are marked with arrows on the driven/driving sides. The arrows point in the rotation direction of the gear unit. It must be ensured, when connecting the motor and during motor control, that the gear unit can only operate in the rotation direction, e.g. by means of a rotary field test. (For further details, please refer to Catalogue G1000 and WN 0-000 40)

Attention!

With gear units with an integrated back stop, switching the drive motor to the blocked rotation direction, i.e. incorrect rotation direction, can lead to gear damage.

Ensure that no aggressive or corrosive substances are present in the area surrounding the installation site or are subsequently expected during operation, which attack metal, lubricants or elastomers. In case of doubt, please contact Getriebebau NORD and take the recommended action.

Oil expansion tanks (Option OA) must be fitted in accordance with the attached works standard WN 0-530 04. For gear units with an M10x1 vent plug, works standard WN 0-52135 must be observed.

Oil storage tanks (Option OT) must be fitted in accordance with the attached works standard WN 0-521 30.

If venting of the gear unit is provided, the vent or the pressure vent must be activated before commissioning. To activate, remove the transport securing devices (sealing cord). Position of the vent plug: see Section 6.1.

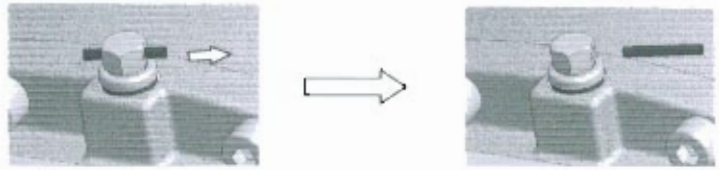

Figure 3-1: Activating the vent plug

Special pressure vents are supplied as loose parts. Before commissioning, the vent plug must be replace with the pressure vent which is supplied as a loose part. This is achieved by screwing out the vent fitting and replacing it with the pressure vent and seal (refer to Section 6.2 for torque values). Double gear units consist of two single units and are equipped with 2 oil chambers and 2 pressure vents.

Figure 3-2: Removing vent plug and fitting the pressure vent

3.5 Installing the gear unit

The eyebolts screwed into the gear units must be used during installation. The safety notes in Section 1.4 must be observed.

The base and/or flange to which the gear unit is fitted should be vibration-free, torsionally strong and flat. The smoothness of the mating surface on the base or flange must be according to tolerance clad K of DIN ISO 2768-2. All contamination to the bolting surfaces of gear unit and base and/or flange must be thoroughly removed.

The gear unit must be precisely aligned with the drive shaft of the machine in order to prevent additional forces from being imposed on the gear unit due to tension.

Welding of the gear unit is prohibited. The gear unit must not be used as the earth connection for welding work, as this may cause damage to the bearings and gear wheels.

The gear unit must be installed in the correct configuration (see Section 6.1) (UNIVERSAL gear unit types SI and SIS are independent of the configuration). Changes to the installation position after delivery require adjustment of the quantity of oil, and often other measures such as e.g. the installation of encapsulated roller bearings. **Damage may result if the stated installation position is not observed.**

All gear unit feet and/or all flange bolts on each side must be used. Bolts must have a minimum quality of 8.8. The bolts must be tightened to the correct torques (refer to Section 6.2 for torque values). Tension-free bolting must be ensured, particularly for gear units with a foot and flange.

Danger!

To ensure that the gearbox does not get too warm and to avoid injury to persons, observe the following during installation:

- The surfaces of gear units or geared motors may become hot during or shortly after operation. **Attention: danger of burns!!** Protection against accidental contact may need to be installed.
- With geared motors, the **cooling air of the motor fan** must be able to flow **unobstructed** onto the gear unit.

3.6 Fitting hubs on the gear shafts

Attention!

Do not subject the gear unit to harmful axial forces when fitting the hubs.

Drive and driven elements, e.g. coupling and chain-wheel hubs must be mounted onto the drive and driven shaft of the gear unit using suitable pullers that will not apply damaging axial forces onto the gear unit. In particular, do not hit the hubs with a hammer.

Use the end thread of the shafts for pulling. Fitting can be aided by coating the hub with lubricant or heating it up to approx. 100°C beforehand.

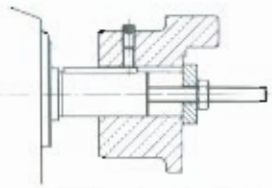

Figure 3-3: Example of a simple pulling device

Danger!

Drive and driven elements, such as belt drives, chain drives and couplings **must be fitted with contact protection.**

Driven elements may only subject the drive units to the maximum radial force F_R and axial force F_A as specified in the catalogue. Observe the correct tension, particularly on belts and chains. Additional loads due to unbalanced hubs are not permitted. The radial force must be applied to the gear unit as closely as possible.

3.7 Fitting push-on gear units

Attention!

The bearings, gear wheels, shafts and housing may be damaged by incorrect fitting.

The push-on gear unit must be fitted onto the shaft using a suitable puller, which will not exert damaging axial forces on the gear unit. In particular, do not hit the gear unit with a hammer.

Assembly and subsequent dismantling is aided by applying an anti-corrosive lubricant to the shaft before fitting.

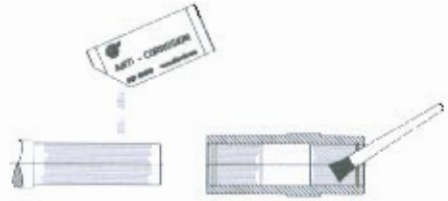

Figure 3-4: Applying lubricant to the shaft and the hub

Note!

The gear unit can be fitted to shafts with and without a shoulder using the fastening element (Option B). Tighten the bolt of the fastening element to the correct torque. (See Chapter 6.2 for torque values) For gear units with option H66, the factory-fitted closing cap must be removed before assembly.

For shaft mounted gear units with option H66 and fastening element (Option B) the pressed-in closing cap must be pushed out before fitting the gear unit. The pressed-in closing cap may be destroyed during dismantling. As standard a second closing cap is supplied as a loose spare part. After fitting the gear unit, fit the new / new condition closing cap as described in Section 3.11.

Figure 3-5: Removing the factory-fitted closing cap

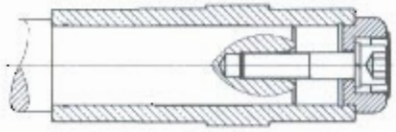

Figure 3-6: Gear unit mounted to shaft with a shoulder using the fastening element

Figure 3-7: Gear unit mounted to shaft without a shoulder using the fastening element

A gear unit can be dismantled from a shaft with shoulder using the following device, for example

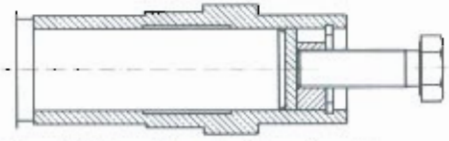

Figure 3-8: Dismantling using dismantling device

When mounting push-on gears with torque supports, the support must not be distorted. Tension-free mounting is aided by the rubber buffer (Option G and/or VG).

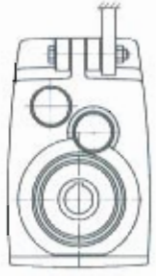

Figure 3-9: Mounting the rubber buffer (Option G and/or VG) on parallel shaft gear units

To fit the rubber buffer, tighten the screw fastening until there is no play between the contact surfaces when there is no load. Then turn the fastening nut (only applies for screw fastenings with adjusting threads) half a turn in order to pre-tension the rubber buffer. Greater pre-tension is not permissible. Secure the screw fastening from coming loose, e.g. with Loctite 242 or a second nut.

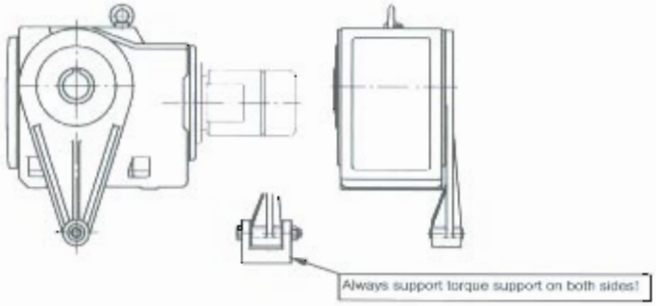

Figure 3-10: Attaching the torque support on bevel gear and worm gear units

Tighten the bolts on the torque support to the correct torque (see Section 6.2 for torque values) and secure to prevent loosening (e.g. Loctite 242, Loxeal 54-03).

3.8 Fitting shrink discs

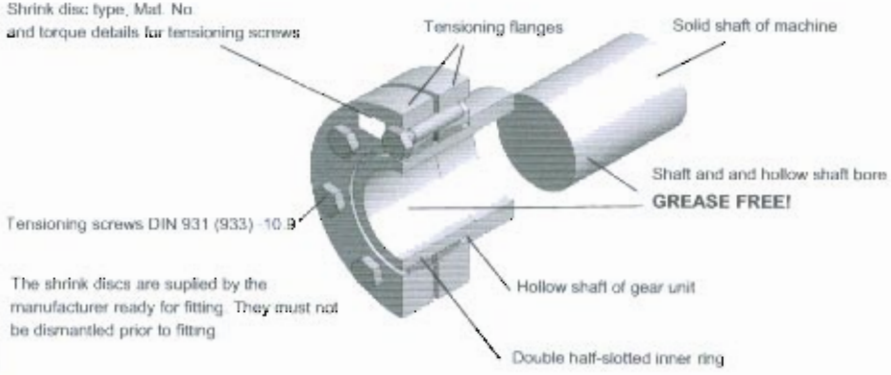

Figure 3-11: Hollow shaft with shrink disc

STOP	**Attention!**
	Do not tighten bolts if the solid shaft is not inserted!

Assembly sequence:

1. Remove any transport securing devices.
2. Loosen but do not remove tightening bolt and tighten gently by hand until there is no play between the flanges and the inner ring.

3. Slide the shrink disc onto the hollow shaft until the outer clamping flange is flush with the hollow shaft. The shrink disc is easier to slide on if the bore of the inner ring is lightly greased.
4. Prior to mounting, grease the solid shaft only in the area which will later come into contact with the bronze bush in the hollow shaft of the gear unit. Do not grease the bronze bush, in order to prevent grease penetrating the area around the shrink connection.
5. The hollow shaft of the gear unit must be completely de-greased and **completely free of grease.**
6. In the area of the shrink connection the solid shaft of the machine must be degreased and **completely free of grease**.
7. Insert the solid shaft of the machine into the hollow shaft so as to completely fill the area around the shrink connection.
8. Position the clamping flange by gently tightening the bolts.
9. Tighten the bolts successively in a clockwise direction by several turns – not crosswise – with approx. ¼ rotation per turn. Tighten the bolts with a torque wrench to the torque indicated on the shrink disc.
10. When the tensioning bolts have been tightened, there must be an even gap between the clamping flanges. If this is not the case, the gear unit must be dismantled and the shrink disc connection checked for correct fit.

Danger!

Risk of injury from incorrect mounting and dismantling of the shrink disc.

Dismantling sequence:

1. Loosen the bolts successively in a clockwise direction by several turns with approx. ¼ rotation per turn. Do not remove the bolts from their thread.
2. Loosen the clamping flanges from the cone of the inner ring.
3. Remove the gear unit from the solid shaft of the machine.

3.9 Fitting the covers

Danger!

Shrink discs and exposed rotating shaft ends require contact guards in order to prevent injuries. A cover (Option H and Option H66) can be used as a guard. If this does not achieve sufficient protection against contact according to the required protection type, the machinery and plant constructor must ensure this be means of special attached components.

All fixing screws must be used and tightened to the correct torque (See Section 6.2 for torque values) For covers with option H66, press in the new / new condition closing cap by tapping it lightly with a hammer.

Figure 3-12: Fitting the covers, Option SH, Option H, and Option H66

3.10 Fitting a standard motor

The maximum permitted motor weights indicated in the table below must not be exceeded when attaching the motor to an IEC- / NEMA adapter

Maximum permitted motor weights														
IEC motor size	63	71	80	90	100	112	132	160	180	200	225	250	280	315
NEMA Motor size		56C	143T	145T	182T	184T	210T	250T	280T	324T	326T	365T		
Max. motor weight [kg]	25	30	40	50	60	80	100	200	250	350	500	700	1000	1500

Assembly procedure to attach a standard motor to the IEC adapter (Option IEC)/NEMA adapter

1. Clean motor shaft and flange surfaces of motor and IEC /NEMA adapter and check for damage. Mounting dimensions and tolerances of the motor must conform to DIN EN 50347/NEMA MG1 Part 4.
2. Push the coupling sleeve onto the motor shaft so that the motor parallel key engages into the groove in the sleeve on tightening.
3. Tighten the coupling sleeve on the motor shaft in accordance with the motor manufacturer's instructions until it touches the collar. With motor sizes 160, 180 and 225, any spacer bushes must be positioned between the coupling sleeve and the collar. With standard helical gear units, dimension B between the coupling sleeve and the collar must be observed (see Figure 3-13). Certain **NEMA adapters** require the adjustment of the coupling in accordance with the specifications indicated on the adhesive plate.
4. Secure the coupling half with the threaded pin. The threaded pin must be coated prior to use with a securing lubricant e.g. Loctite 242, Loxeal 54-03 and tightened to the correct torque. (See Chapter 6.2 for torque values)
5. Sealing of the flange surfaces of the motor and the IEC /NEMA adapter is recommended if the motor is installed outdoors or in a humid environment. **The flange surfaces** of motor and adapter must be completely coated with **surface sealant** Loctite 574 or Loxeal 58-14 prior to mounting so that the flange seals after mounting.
6. Mount the motor to the IEC /NEMA adapter, do not forget to fit the gear rim or the sleeve. (See Figure 3-13)
7. Tighten the IEC /NEMA adapter bolts to the correct torque. (See Chapter 6.2 for torque values)

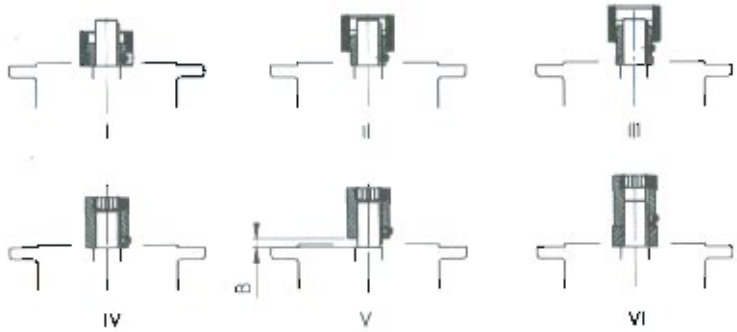

Figure 3-13: Fitting the coupling onto the motor shaft - various types of coupling

I Gear coupling, one-part

II Gear coupling, two-part

III Gear coupling, two-part with spacer bush

IV Claw coupling, two-part

V Claw coupling, two-part, observe dimension B:

Standard helical gear unit:	SK0, SK01, SK20, SK25, SK30, SK33 (2-stage) SK010, SK200, SK250, SK300, SK330 (3-stage)	
	IEC size 63	IEC size 71
Dimension B (Fig. 3-13V)	B = 4.5mm	B = 11.5 mm

VI Claw coupling, two-part with spacer bush

3.11 Retrospective paintwork

Attention!

For retrospective painting of the gear unit, the radial seals, rubber elements, pressure venting valves, hoses, type plates, adhesive labels and motor coupling components must not come into contact with paints, lacquers or solvents, as otherwise components may be damaged or made illegible.

3.12 Fitting the cooling coil to the cooling system

Cutting ring screw threads (see Item 1, Figs. 3-14) are located at the casing cover for the connection of a pipe with an external diameter of 10 mm according to DIN 2353. **Remove the drain plug from the screw neck prior to assembly to avoid any contamination of the cooling system.** The screw necks should be connected with the coolant circuit, which must be provided by the operator. The flow direction of the coolant is irrelevant.

Make sure not to twist the screw necks during or after assembly as the cooling coil may be damaged (see Item 3, Fig. 3-14). You must ensure that no external forces act on the cooling coil.

Figure 3-14: Cooling cover

Danger!

The pressure released from the cooling circuit before carrying out any work on the gear unit.

4. Commissioning

4.1 Checking the oil level

The oil level must be checked prior to commissioning. See Section 5.2.

4.2 Activating the automatic lubricant dispenser

Some gear unit types with standard motor (Option IEC/NEMA) have an automatic lubricant dispenser for the rolling bearings. This dispenser must be activated prior to commissioning. The cartridge case cover has a red information sign for the activation of the lubricant dispenser.

Activating the Automatic Lubricant Dispenser:

1. Loosen and remove cylinder bolts M8x16 **(1)**
2. Lift off cartridge case cover **(2)**
3. Insert activation screw **(3)** into the lubricant dispenser **(5)** until the lug **(4)** breaks off at the defined fracture point
4. Refit cartridge case cover **(2)** and fasten using cylinder bolt **(1)**. (See Chapter 6.2 for torque values)
5. Mark activation date on the adhesive plate **(6)** indicating month/year

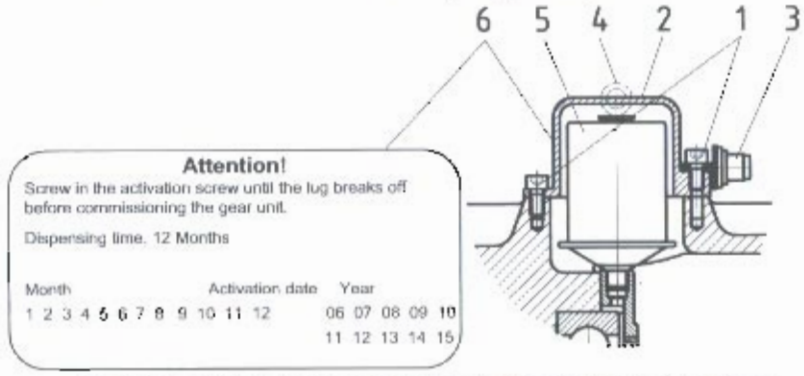

Figure 4-1: Activating the automatic lubricant dispenser with standard motor mounting

4.3 Operation with lubricant cooling

Water cooling

STOP	**Caution!** The drive may only be commissioned after the cooling spiral has been connected to the cooling circuit, and the cooling circuit has been put into operation.

The coolant must have a similar thermal capacity as water (specific thermal capacity at 20°C c=4.18 kJ/kgK) Industrial water without any air bubbles or sediments is recommended as a coolant. The water hardness must be between 1° dH and 15° dH, and the pH value must be between pH 7.4 and pH 9.5. No aggressive liquids should be added to the coolant!

The **coolant pressure** must not exceed **8 bar**. The required **quantity of coolant** is **10 litres/minute**, and the **coolant inlet temperature** should not exceed 40°C; we recommend **10°C**.

We also recommend fitting a pressure reducer at the coolant inlet to avoid any damage due to excessive pressure.

If there is a danger of frost the operator should add a suitable anti-freeze solution to the cooling water.

The **temperature of the cooling water** and the **cooling water flow rate** must be **supervised** and **ensured** by the operator.

Air/Oil cooler

This version and all important data concerning the air/oil cooler can be obtained from Catalogue G1000, or contact the manufacturer of the cooling unit.

4.4 Running-in time for the worm gear unit

i	**Note!** In order to achieve maximum efficiency of the worm gear unit, the gear unit must be subjected to a running-in period of approx. 25 h – 48 h under maximum load. There may be a reduction in efficiency before the running-in period is complete.

4.5 Checklist

Checklist

Object of the check	Checked on:	Information – see Section
Is the vent plug activated or the pressure vent screwed in?		Sec. 3.4
Does the required configuration conform with the actual installation?		Sec. 6.1
Are the external gear shaft forces within permitted limits (chain tension)?		Sec. 3.6
Is the torque support correctly fitted?		Sec. 3.7
Are contact guards fitted to rotating components?		Sec. 3.9
Is the automatic lubricant dispenser activated?		Sec. 4.2
Is the cooling cover connected to the cooling circuit?		Sec. 3.12/4.3

5. Service and maintenance

5.1 Service and maintenance intervals

Service and Maintenance Intervals	Service and Maintenance Work	Information – see Section
At least every six months	- Visual inspection - Check for running noises - Check oil level - Re-grease (applicable only to free drive shaft / Option W and on agitator bearings / Option VL2 / VL3) - Replace automatic lubricator (for operating times < 8 h/day: a replacement interval for the lubricant dispenser of 1 year is permissible) (only with IEC/NEMA standard motors)	5.2 5.2 5.2 5.2 5.2
For operating temperatures up to 80°C Every 10000 operating hours at least every 2 years (The interval is double this if the unit is filled with synthetic products) For higher temperatures or extreme operating conditions (high humidity, aggressive environments and large temperature fluctuations) the oil change intervals must be halved	- Change the oil - Clean or replace the vent plug	5.2 5.2
At least every 10 years	- General overhaul	5.2

5.2 Service and maintenance work

Servicing and maintenance work must only be performed by qualified specialist personnel.

Installation and maintenance work must only be performed when gear units are at a standstill. The drive must be isolated and secured to prevent accidental start-up.

Visual inspection

The gear unit must be checked for leaks. In addition, the gear unit must be inspected for external damage and cracks in the hoses, hose connections and rubber buffers. Have the gear unit repaired in case of leaks, e.g. dripping gear oil or cooling water, damage or cracks. Please contact the NORD service department.

Note:

SI type universal worm gear drives, IEC/NEMA adapters for NORDBLOC.1 up to size 673.1 and SEP/SEK servo motor adapters are sealed on the drive side by means of a shaft sealing ring which is located directly in the oil space. **This ensures that the shaft sealing ring is especially well supplied with lubricating oil, and has low friction and a long service life.**

The drive shaft bearing has two cover discs, which form a non-contact seal (See Fig. 5-1). These form a long sealing gap between the shoulder of the inner ring. Because of this, the bearing is almost frictionless, friction losses are minimal and there is no temperature increase in the drive shaft bearing.

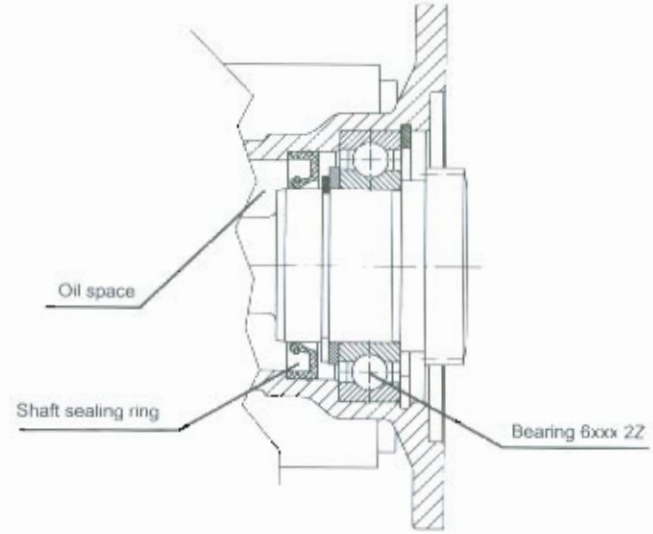

Fig. 5-1: Drive shaft bearing and seal on the coupling side of universal worm gear units

Due to the internal construction of the bearing, there may initially be a very slight apparent leakage on the drive shaft, which is caused by transport or storage. I.e. there may be a slight escape of oil from the bearing grease before commissioning and in the initial phase of operation.

We hereby explicitly point out that any slight escape of oil does not constitute technical faults and does not impair the reliability of the gear unit and the bearing.

Check for running noises

If the gear unit produces unusual running noises and/or vibrations, this could indicate damage to the gear unit. In this case the gear should be shut down and a general overhaul carried out.

Check the oil level

Section 6.1 describes the versions and the corresponding oil level screws. With double gear units, the oil level must be checked on both units. The pressure vent must be at the position marked in Section 6.1.

The oil level does not need to be checked on gear units without oil level screw (see Section 6.1).

Gear unit types that are not supplied full of oil must be filled before the oil level is checked. (see "Changing the oil")

Checking the oil level:

1. The oil level may only be checked when the gear unit is **at a standstill and has cooled down**. The gear unit must be secured to prevent accidental switch-on.
2. The oil level screw corresponding to the version must be screwed out. (See Section 6.1)

Note!

At the first oil level check a small amount of oil may escape, as the oil level may be below the lower edge of the oil level hole.

3. Gear units with oil level screw: The maximum oil level is the lower edge of the oil level hole. The minimum oil level is 4 mm below the oil level hole. If the oil level is too low, this must be corrected using the correct type of oil. An oil level glass is available instead of the oil level screw
4. Gear units with an oil level vessel: The oil level must be checked **in the oil level vessel** with the aid of the dipstick plug (thread G1 1/4). The oil level must be between the upper and lower mark when the dipstick is completely screwed in (see Fig. 5-2). The oil level must be corrected with the correct type of oil if necessary. These gearboxes may only be operated in the configuration stated in Section 6.1.
5. The oil level screw or the cap screw with dipstick and all other loosened screws must be correctly re-tightened.

Figure 5-2: Check the oil level with a dipstick

Regreasing

Some gear unit designs (free drive shaft, Option W, agitator designs VL2 and VL3) are equipped with a regreasing device.

For agitator versions VL2 and VL3, the vent screw located opposite to the grease nipple must be unscrewed before regreasing. Grease should be injected until a quantity of 20-25g escapes from the vent hole. After this, the vent plug must be reinserted and tightened.

For Option W and some IEC adapters, the outer roller bearing must be regreased with approx. 20-25g of grease via the grease nipple provided

Recommended grease: Petamo GHY 133N (see Section 6.4 Klüber Lubrication).

Replacing the automatic lubricant dispenser

Screw-off the cartridge case cover (2), (see Fig. 4-1). The lubrication dispenser (5) is screwed out and replaced with a new component (Part No. 283 0100). Then activate (see Chapter 4.2)!

Changing the oil

The figures in Section 6.1 show the oil drain screw, the oil level screw and the pressure vent screw for various designs.

Sequence:

1. Place the drip tray below the oil drain screw or the oil drain cock
2. Completely remove oil level screw, screwed sealing plug with dipstick if an oil level tank is being used and oil drain screw.

Danger!

Warning: Hot oil!

3. Drain all the oil from the gear unit.
4. If the screw lock coating of the oil drain screw or oil level screw is damaged in the thread, a new oil level screw must be used or the thread cleaned and coated with securing lubricant, e.g. Loctite 242, Loxeal 54-03 prior to inserting. The seal ring must be replaced if damaged
5. Support the seal ring, insert the oil drain screw into the hole and tighten to the correct torque! (See Section 6.2 for torque values)
6. Using a suitable filling device, refill with oil of the same type through the oil level hole until oil emerges from the oil level hole. (The oil can also be filled through the pressure vent screw or a sealing plug located higher than the oil level). If an oil level vessel is used, fill the oil through the upper inlet (thread G1¼) until the oil level is set as described in Section 5.2.
7. Wait at least 15 minutes, or at least 30 minutes if an oil level tank is used, and then check the oil level. Proceed as described in Section 5.2.

Note!

The oil does not need to be changed on gear units without oil level screw (see Section 6.1). These gear units are lubricated for life.

Standard helical gear units have no oil level screw. Here, the oil is topped up through the pressure vent bolt using the quantities listed in the table in Section 6.5.

Cleaning or replacing the vent plug

In case of severe dirt, unscrew the vent plug and clean it thoroughly. If necessary screw in a new vent plug with a new sealing ring.

General overhaul

The gear units must be completely dismantled The following work must be carried out:

- Clean all gear unit components
- Examine all gear unit components for damage
- All damaged components must be replaced
- All roller bearings must be replaced
- Replace back stops if fitted
- Replace all seals, radial seals and Nilos rings
- Replace plastic and elastomer components of the motor coupling

The general overhaul must be carried out by qualified personnel in a specialist workshop with appropriate equipment in observance of national regulations and laws. We recommend that the general overhaul is carried out by the NORD service department.

6. Appendix

6.1 Versions and maintenance

Explanation of symbols for the following version illustrations:

- ▽ Vent
- ▼ Oil level
- ■ Oil drain

> **Note!**
> SK 320, SK 172, SK 272, SK 372K, SK 273 and SK373 as well as SK 01282 NB, SK 0282 NB, SK 1382 NB and UNIVERSAL / Minibloc gear units are lubricated for life. These gear units do not have an oil filler screw.

Parallel shaft gear units with oil level vessel

The following applies for SK 9282, SK 9382, SK 10282, SK 10382, SK 11282, SK 11382 parallel gear units and SK 12382 in the M4 configuration with oil level vessels:

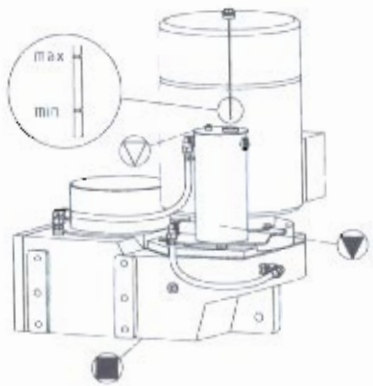

Figure 6-1: Oil level check with oil level tank

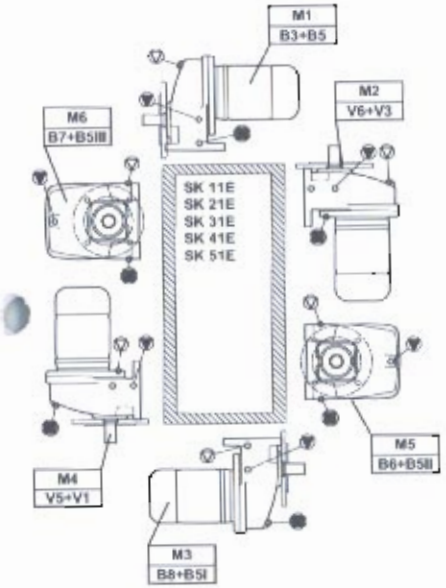

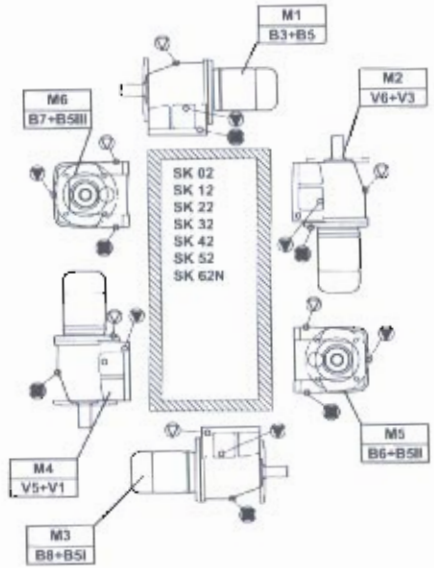

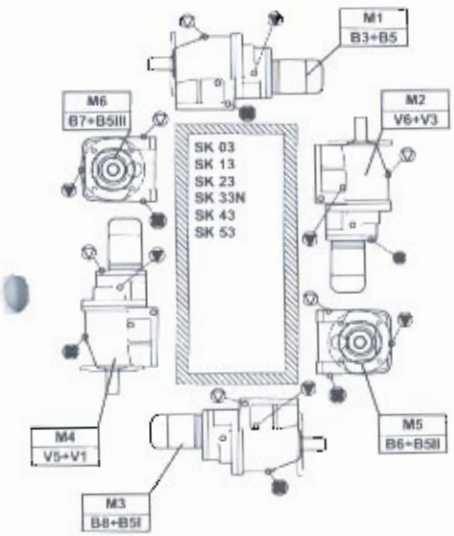

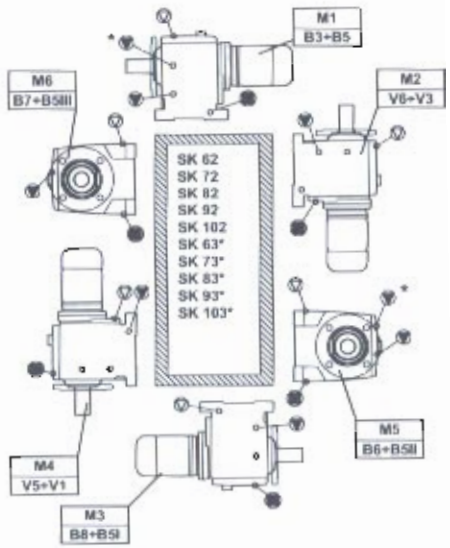

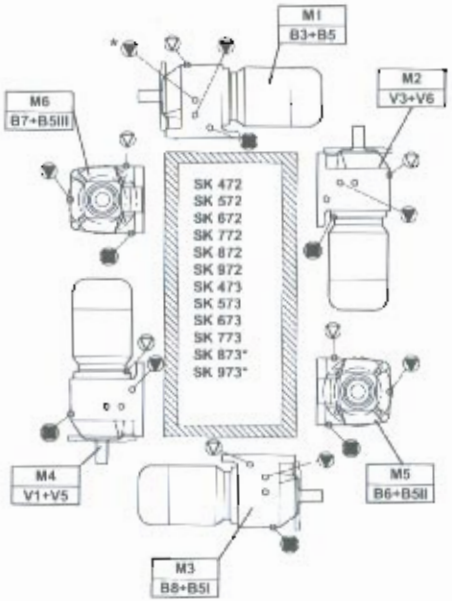
M1
B3+B5
M2
V3+V6
M6
B7+B5III
SK 472
SK 572
SK 672
SK 772
SK 872
SK 972
SK 473
SK 573
SK 673
SK 773
SK 873*
SK 973*
M4
V1+V5
M5
B6+B5II
M3
B8+B5I

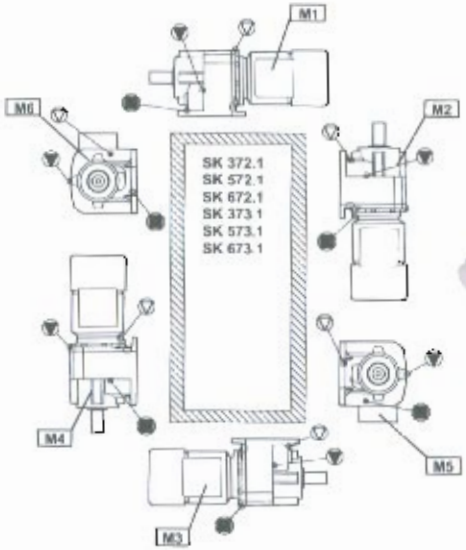
M1
M6
M2
SK 372.1
SK 572.1
SK 672.1
SK 373.1
SK 573.1
SK 673.1
M4
M5
M3

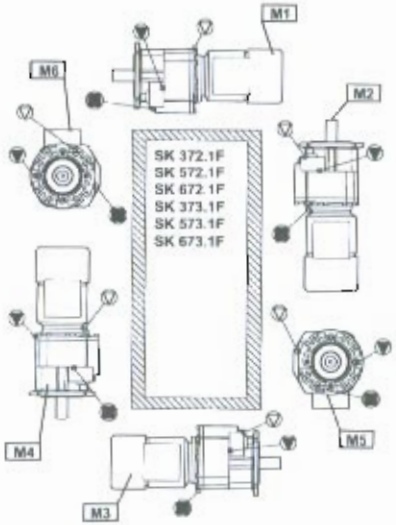
M1
M6
M2
SK 372.1F
SK 572.1F
SK 672.1F
SK 373.1F
SK 573.1F
SK 673.1F
M4
M5
M3

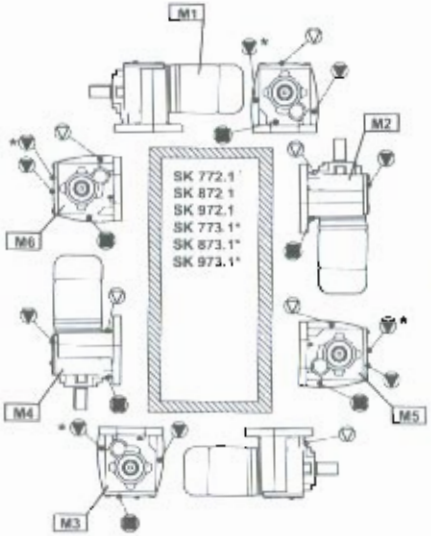
M1
M2
M6
SK 772.1
SK 872.1
SK 972.1
SK 773.1*
SK 873.1*
SK 973.1*
M4
M5
M3

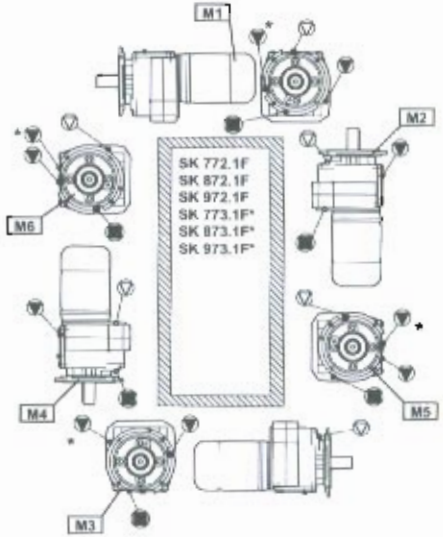
M1
M2
M6
SK 772.1F
SK 872.1F
SK 972.1F
SK 773.1F*
SK 873.1F*
SK 973.1F*
M4
M5
M3

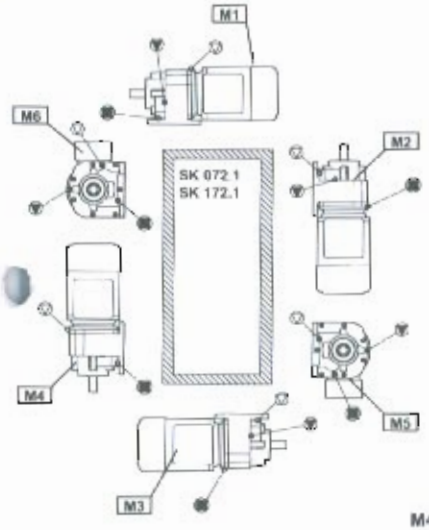
M1
M6
M2
SK 072.1
SK 172.1
M4
M5
M3

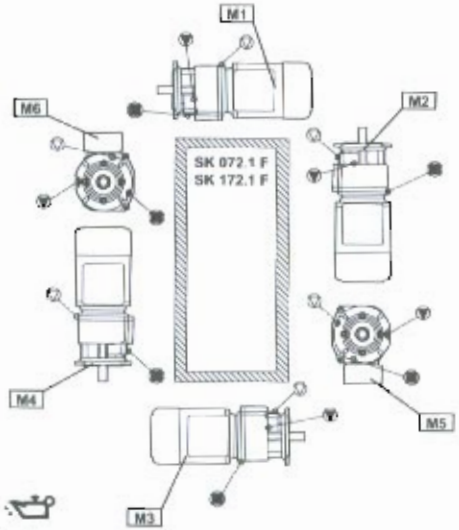
M1
M6
M2
SK 072.1 F
SK 172.1 F
M4
M5
M3

M4

⇨ 42

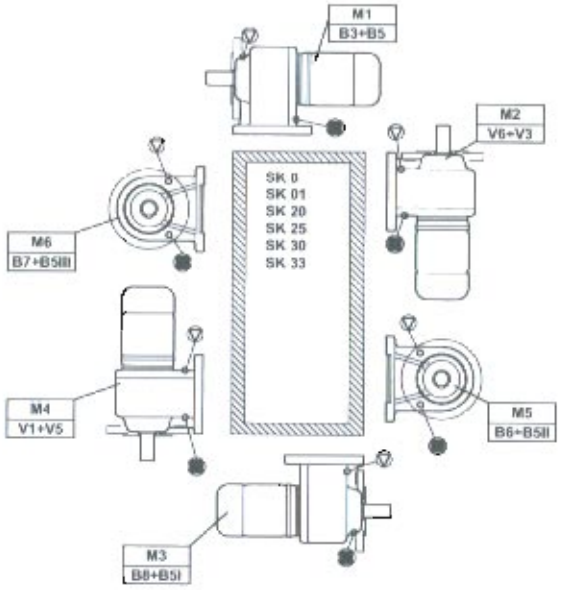
M1
B3+B5
M2
V6+V3
SK 0
SK 01
SK 20
SK 25
SK 30
SK 33
M6
B7+B5III
M4
V1+V5
M5
B6+B5II
M3
B8+B5I

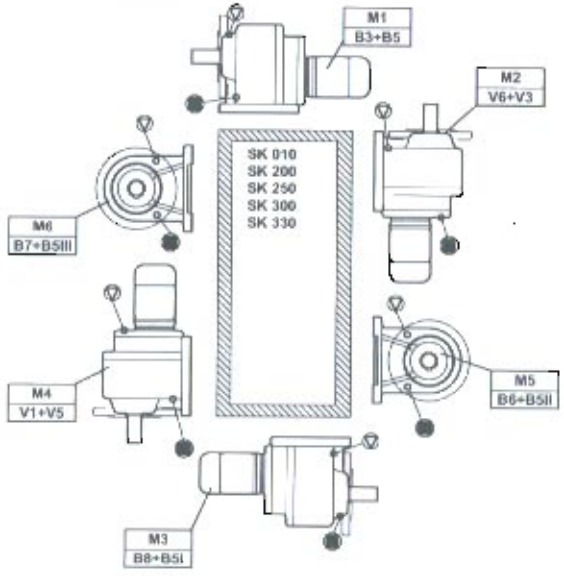
M1
B3+B5
M2
V6+V3
SK 010
SK 200
SK 250
SK 300
SK 330
M6
B7+B5III
M4
V1+V5
M5
B6+B5II
M3
B8+B5I

⇨ 📖 43

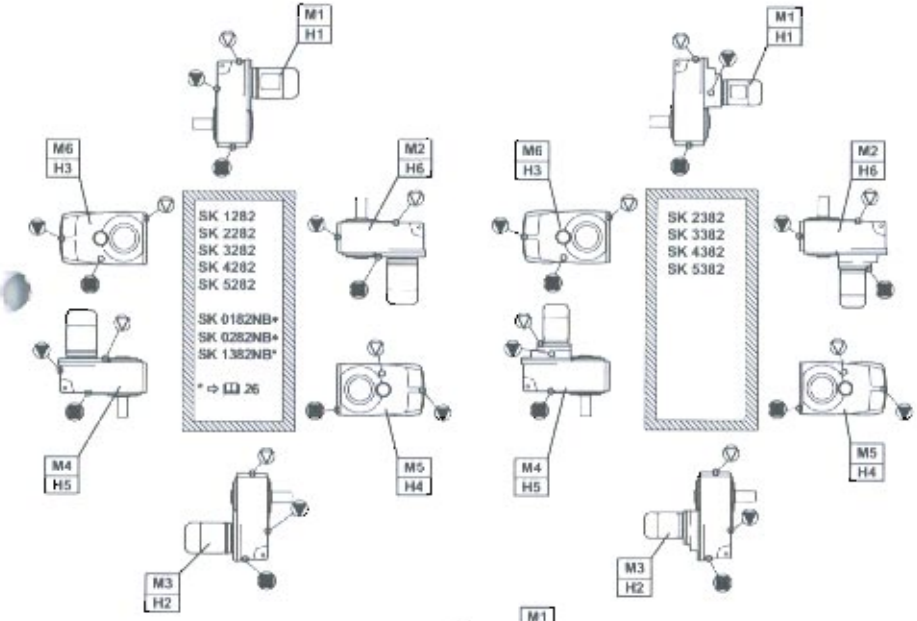
M1
H1
M6
H3
M2
H6
SK 1282
SK 2282
SK 3282
SK 4282
SK 5282
SK 0182NB*
SK 0282NB*
SK 1382NB*
* ⇨ 📖 26
M4
H5
M5
H4
M3
H2
M1
H1
M6
H3
M2
H6
SK 2382
SK 3382
SK 4382
SK 5382
M4
H5
M5
H4
M3
H2

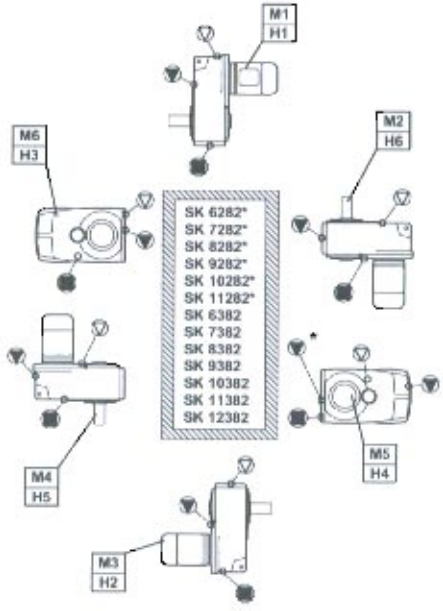
M1
H1
M6
H3
M2
H6
SK 6282*
SK 7282*
SK 8282*
SK 9282*
SK 10282*
SK 11282*
SK 6382
SK 7382
SK 8382
SK 9382
SK 10382
SK 11382
SK 12382
M4
H5
M5
H4
M3
H2

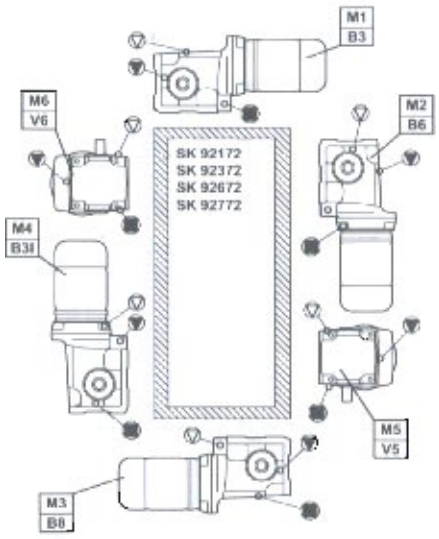
M1
B3
M6
V6
M2
B6
SK 92172
SK 92372
SK 92672
SK 92772
M4
B3I
M5
V5
M3
B8

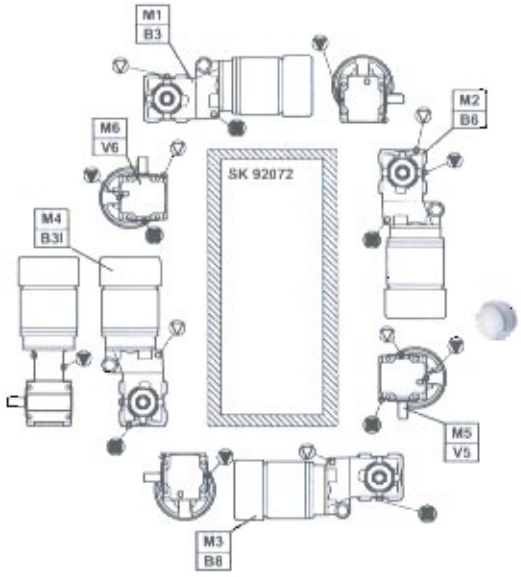
M1
B3
M2
B6
M6
V6
SK 92072
M4
B3I
M5
V5
M3
B8

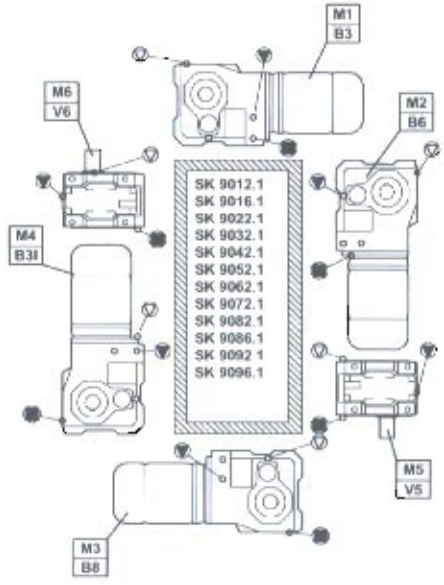
M1
B3
M6
V6
M2
B6
SK 9012.1
SK 9016.1
SK 9022.1
SK 9032.1
SK 9042.1
SK 9052.1
SK 9062.1
SK 9072.1
SK 9082.1
SK 9086.1
SK 9092.1
SK 9096.1
M4
B3I
M5
V5
M3
B8

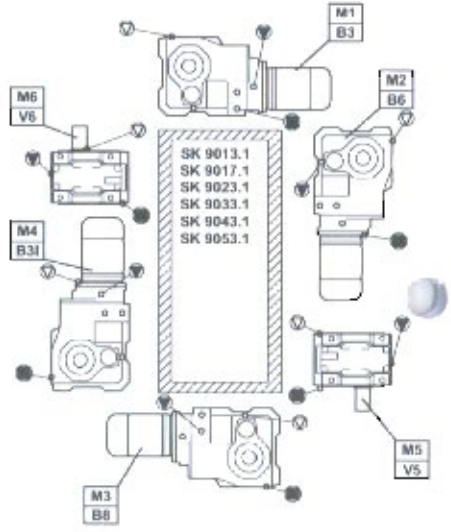
M1
B3
M2
B6
M6
V6
SK 9013.1
SK 9017.1
SK 9023.1
SK 9033.1
SK 9043.1
SK 9053.1
M4
B3I
M5
V5
M3
B8

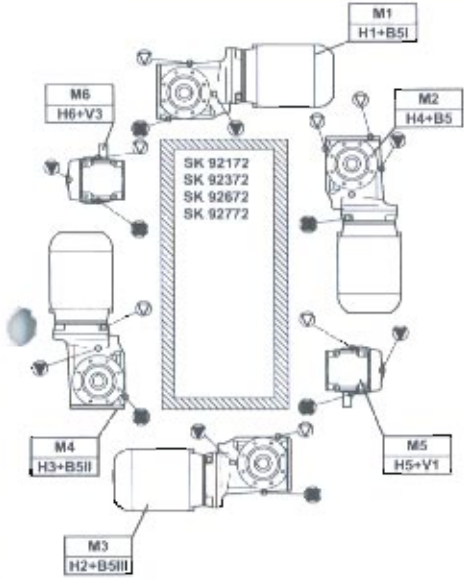
M1
H1+B5I
M6
H6+V3
M2
H4+B5
SK 92172
SK 92372
SK 92672
SK 92772
M4
H3+B5II
M5
H5+V1
M3
H2+B5III

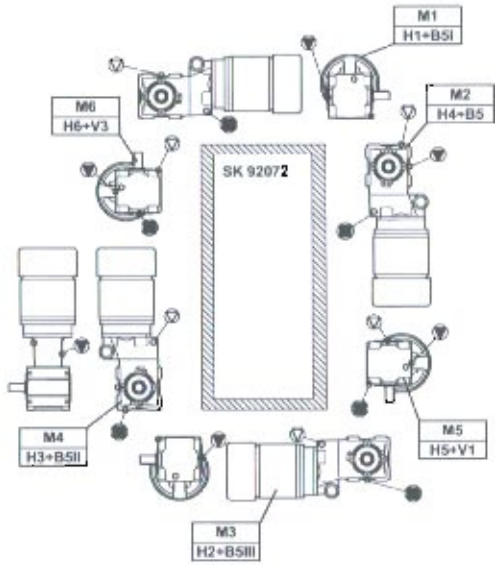
M1
H1+B5I
M6
H6+V3
M2
H4+B5
SK 92072
M4
H3+B5II
M5
H5+V1
M3
H2+B5III

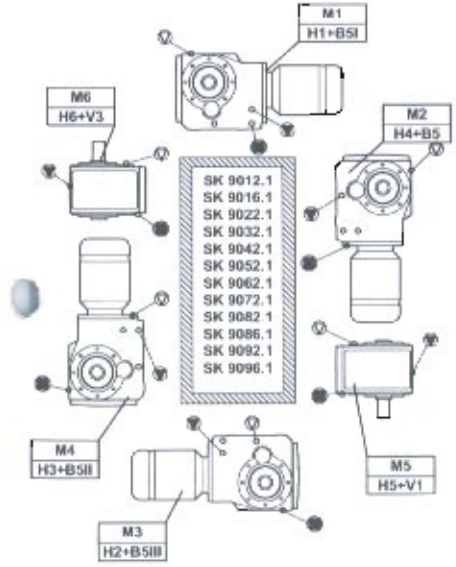
M1
H1+B5I
M6
H6+V3
M2
H4+B5
SK 9012.1
SK 9016.1
SK 9022.1
SK 9032.1
SK 9042.1
SK 9052.1
SK 9062.1
SK 9072.1
SK 9082.1
SK 9086.1
SK 9092.1
SK 9096.1
M4
H3+B5II
M5
H5+V1
M3
H2+B5III

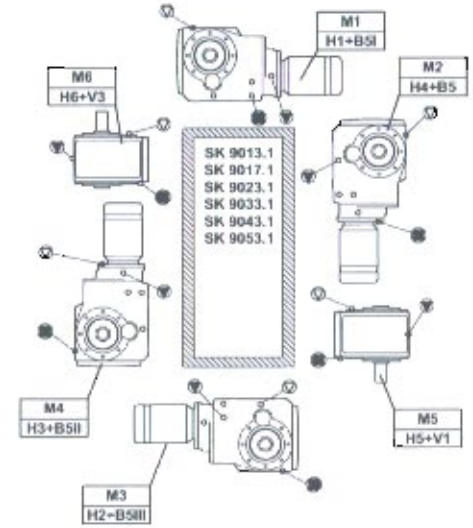
M1
H1+B5I
M6
H6+V3
M2
H4+B5
SK 9013.1
SK 9017.1
SK 9023.1
SK 9033.1
SK 9043.1
SK 9053.1
M4
H3+B5II
M5
H5+V1
M3
H2+B5III

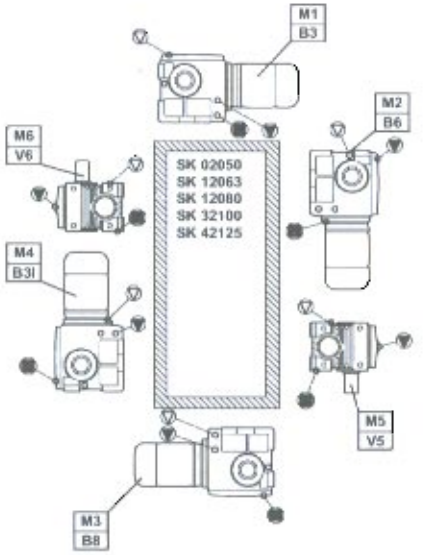
M1
B3
M2
B6
M6
V6
SK 02050
SK 12063
SK 12080
SK 32100
SK 42125
M4
B3I
M5
V5
M3
B8

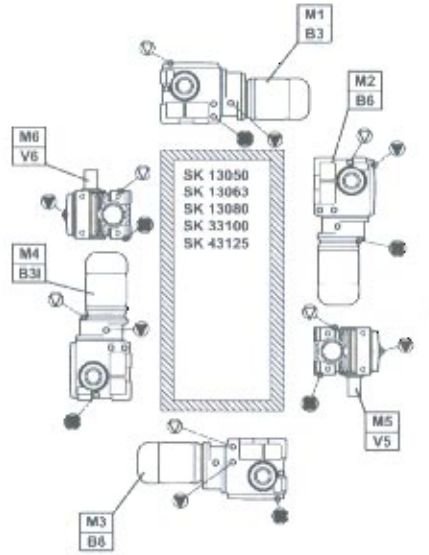
M1
B3
M2
B6
M6
V6
SK 13050
SK 13063
SK 13080
SK 33100
SK 43125
M4
B3I
M5
V5
M3
B8

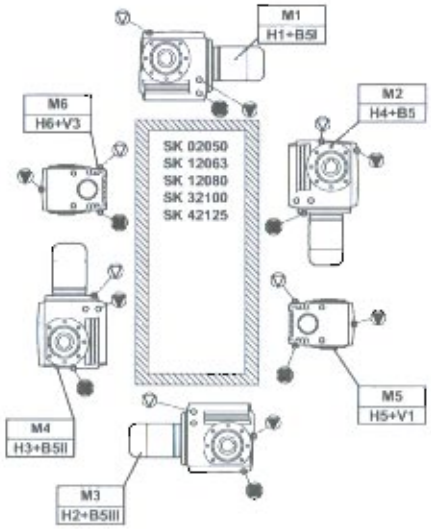
M1
H1+B5I
M6
H6+V3
M2
H4+B5
SK 02050
SK 12063
SK 12080
SK 32100
SK 42125
M5
H5+V1
M4
H3+B5II
M3
H2+B5III

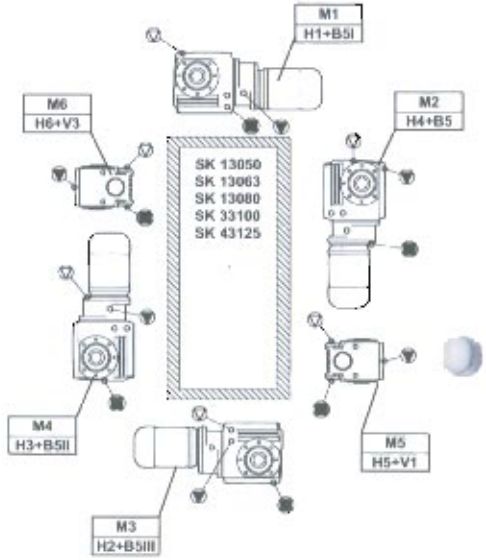
M1
H1+B5I
M6
H6+V3
M2
H4+B5
SK 13050
SK 13063
SK 13080
SK 33100
SK 43125
M4
H3+B5II
M5
H5+V1
M3
H2+B5III

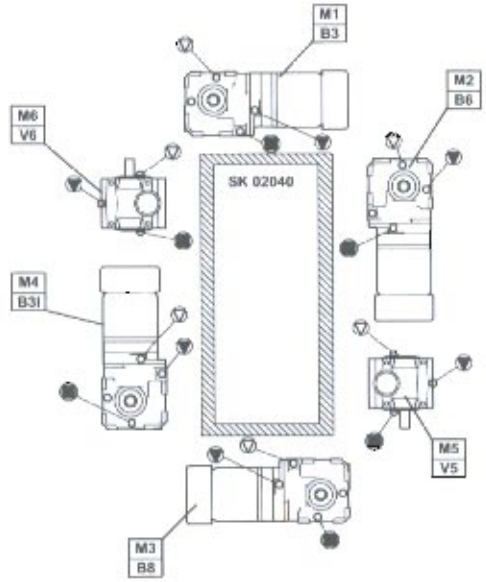
M1
B3
M2
B6
M6
V6
SK 02040
M4
B3I
M5
V5
M3
B8

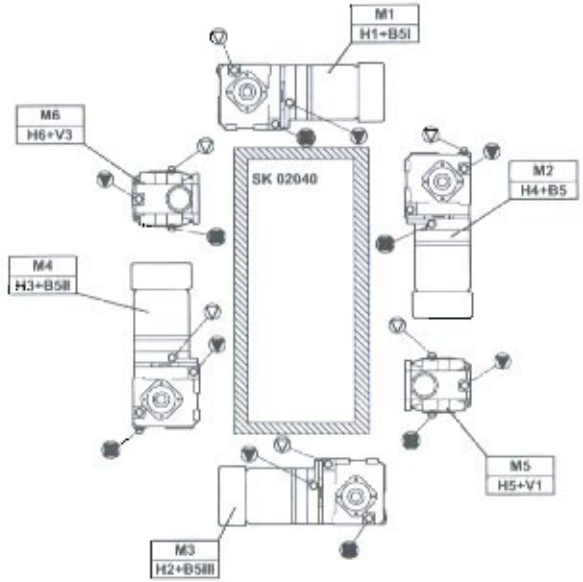
M1
H1+B5I
M6
H6+V3
M2
H4+B5
SK 02040
M4
H3+B5II
M5
H5+V1
M3
H2+B5III

SK 1SI31 – SK 1SI75
SK 1SIS31 – SK 1SIS75
SK 1SIS-D31 – SK 1SIS-D63
SK 2SIS-D40 – SK 2SIS-D63
SK 1S32 - SK 1S63
SK 2S32NB – SK 2S63NB
SK 1SU32 - SK 1SU63
SK 2SU32NB- SK 2SU63NB
SK 1SM31 – SK 1SM63
SK 2SM40 – SK 2SM63

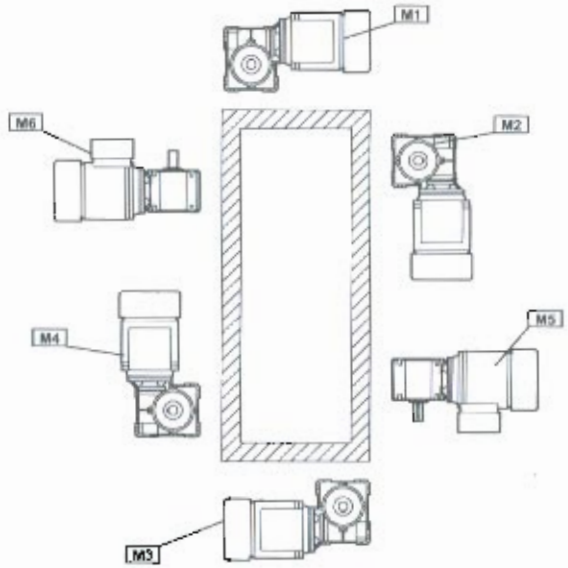

⇨ 26

6.2 Torque values

Bolt Torques [Nm]						
Size	Screw connections in the strength classes 8.8	10.9	12.9	Sealing screws	Threaded pin on coupling	Screw connections on protective covers
M4	3.2	5	6	-	-	
M5	6.4	9	11	-	2	
M6	11	16	19	-	-	6.4
M8	27	39	46	5	10	11
M10	53	78	91	8	17	27
M12	92	135	155	27	40	53
M16	230	335	390	-	-	92
M20	460	660	770	-	-	230
M24	790	1150	1300	80	-	460
M30	1600	2250	2650	170	-	
M36	2780	3910	4710	-	-	
M42	4470	6290	7540	-	-	
G1¼	-	-	-	20	-	

6.3 Troubleshooting

Gear unit malfunctions		
Fault	Possible cause	Remedy
Unusual running noises, vibrations	Oil too low or bearing damage or toothed wheel damage	Consult NORD Service
Oil escaping from gear unit or motor	Defective seal	Consult NORD Service
Oil escaping from pressure vent	Incorrect oil level or incorrect, contaminated oil or unfavourable operating conditions	Oil change Use oil expansion tank (Option OA)
Gear unit becomes too hot	Unfavourable installation conditions or gear unit damage	Consult NORD Service
Shock when switched on, vibrations	Defective motor coupling or loose gear unit mounting or defective rubber element	Replace elastomer gear rim, tighten motor and gear unit fastening bolts, replace rubber element
Drive shaft does not rotate although motor is running	Fracture in gear unit or defective motor coupling or shrink disc slippage	Consult NORD Service

Attention!

Warning: shut down the gear unit immediately should any of the above faults occur!

6.4 Lubricants

With the exception of type SK 11282, SK 11382 and SK 12382 gear units, all gear units are filled with lubricant ready for operation in the required installation position when delivered. This initial filling corresponds to a lubricant from the column for the ambient temperatures (normal version) in the lubricant table.

Roller bearing greases

This table shows comparable roller bearing greases from various manufacturers. The manufacturer can be changed for a given grease type. Getriebebau NORD must be contacted in case of change of grease type or ambient temperature range, as otherwise no warranty for the functionality of our gear units can be accepted.

Lubricant type	Ambient temperature		Castrol	FUCHS	KLÜBER	Mobil	
Mineral oil-based grease	-30 .. 60°C	Energrease LS 2 Energrease LS-EP 2	Longtime PD 2	RENOLIT GP 2 RENOLIT LZR 2 H	-	Mobilux EP 2	Gadus S2 V100 2
	50 .. 40°C		Optitemp LG 2	RENOLIT JP 1619	-		
Synthetic grease	-25 .. 80°C	Energrease SY 2202	Tribol 4747	RENOLIT HLT 2 RENOLIT LST 2	PETAMO GHY 133 N Klüberplex BEM 41-132	Mobiltemp SHC 32	Cassida EP22
Biodegradable grease	-25 .. 40°C	Biogrease FP 2	-	PLANTOGEL 2 S	Klüberbio M 72-82	Mobil SHC Grease 102 EAL	Naturelle Grease EP2
Foodstuff-compatible grease	-25 .. 80°C		Obiain UF 2	RENOLIT G 7 FG 1	Klübersynth UH1 14-151	Mobilgrease FM 222	Cassida RLS2

Lubricant table

This table shows comparable lubricants from various manufacturers. The manufacturer can be changed within a particular viscosity or lubricant type. Getriebebau NORD must be contacted in case of change of viscosity or lubricant type, as otherwise no warranty for the functionality of our gearboxes can be accepted.

Lubricant type	Details on type plate	DIN (ISO) / Ambient temperature		Castrol	FUCHS	KLÜBER	Mobil	
Mineral oil	CLP 680	ISO VG 680 0 .. 40°C	Energol GR-XP 680	Alpha EP 680 Alpha SP 680 Optigear BM 680 Tribol 1100/680	RENOLIN CLP 680 RENOLIN CLP 680 Plus	Klüberoil GEM 1-680 N	Mobilgear 600 XP 680	Omala S2 G 680
	CLP 220	ISO VG 220 -10 .. 40°C	Energol GR-XP 220	Alpha EP 220 Alpha SP 220 Optigear BM 220 Tribol 1100/220	RENOLIN CLP 220 RENOLIN CLP 220 Plus	Klüberoil GEM 1-220 N	Mobilgear 600 XP 220	Omala S2 G 220
	CLP 100	ISO VG 100 -15 .. 25°C	Energol GR-XP 100	Alpha EP 100 Alpha SP 100 Optigear BM 100 Tribol 1100/100	RENOLIN CLP 100 RENOLIN CLP 100 Plus	Klüberoil GEM 1-100 N	Mobilgear 600 XP 100	Omala S2 G 100
Synthetic oil (Polyglycol)	CLP PG 680	ISO VG 680 -20 .. 40°C	-	Alphasyn GS 680 Tribol 800/680	RENOLIN PG 680	Klübersynth GH 6-680	Mobil Glygoyle 680	Omala S4 WE 680
	CLP PG 220	ISO VG 220 -25 ..80°C	Enersyn SG-XP 220	Alphasyn GS 220 Alphasyn PG 220 Tribol 800/220	RENOLIN PG 220	Klübersynth GH 6-220	Mobil Glygoyle 220	Omala S4 WE 220
Synthetic oil (hydrocarbon)	CLP HC 460	ISO VG 460 -30 ..50°C	-	Alphasyn EP 460 Tribol 1510/460 Optigear Synthetic X 460	RENOLIN Unisyn CLP 460	Klübersynth GEM 4-460 N	Mobil SHC 634	Omala S4 GX 460
	CLP HC 220	ISO VG 220 -40 .. 80°C	-	Alphasyn EP 220 Tribol 1510/220 Optigear Synthetic X 220	RENOLIN Unisyn CLP 220	Klübersynth GEM 4-220 N	Mobil SHC 630	Omala S4 GX 220
Bio-degradable oil	CLP E 680	ISO VG 680 -5 .. 40°C		-	PLANTOGEAR 680 S	-		
	CLP E 220	ISO VG 220 -5 .. 40°C		Tribol BioTop 1418/220	PLANTOGEAR 220 S	Klübersynth GEM 2-220	-	Naturelle Gear Fluid EP 220
Food grade oil	CLP PG H1 680	ISO VG 680 -5 .. 40°C	-	Tribol FoodProof 1800/680	-	Klübersynth UH1 6-680	Mobil Glygoyle 680	Cassida Fluid WG 680
	CLP PG H1 220	ISO VG 220 -25 .. 40°C	-	Tribol FoodProof 1800/220		Klübersynth UH1 6-220	Mobil Glygoyle 220	Cassida Fluid WG 220
	CLP HC H1 680	ISO VG 680 -5 .. 40°C		Optileb GT 680	GERALYN SF 680	Klüberoil 4 UH1-680 N	-	Cassida Fluid GL 680
	CLP HC H1 220	ISO VG 220 -25 .. 40°C	-	Optileb GT 220	GERALYN SF 220	Klüberoil 4 UH1-220 N	Mobil SHC Cibus 220	Cassida Fluid GL 220
Gear unit liquid grease		-25 .. 60°C	Energrease LS-EP 00	Longtime PD 00 Tribol 3020/1000-00	RENOLIT DURAPLEX EP 00 RENOLIT LST 00	MICROLUBE GB 00 Klübersynth GE 46-1200	Mobil Chassis Grease LBZ Mobil Glygoyle Grease 00	Aralia EP(LF)2 Thela GL00

6.5 Lubricant quantities

Note!

After changing the lubricant, and in particular after the initial filling, the oil level may change during the first few hours of operation, as the oil galleries and hollow spaces only fill gradually during operation. The oil level is still within the permissible tolerance.

If at the express request of the customer, an oil inspection glass is installed at an additional charge, we recommend that the customer corrects the oil level after an operating period of approx. 2 hours, so that when the gear unit is at a standstill and has cooled down, the oil level is visible in the inspection glass. Only then, is it possible to check the oil level by means of the inspection glass.

The filling quantities stated in the following tables are for guidance only. The precise quantities vary depending on the exact gear ratio. When filling, always observe the oil level screw hole as an indicator of the precise quantity of oil.

*Type SK11282, SK11382 and SK12382 gear units are normally supplied without oil.

[L]												
6.1	M1	M2	M3	M4	M5	M6	M1	M2	M3	M4	M5	M6
6.1	B3	V6	B8	V5	B6	B7	B5	V3	B5I	V1	B5II	B5III
SK11E	0,25	0,50	0,55	0,40	0,35	0,35	0,30	0,35	0,50	0,30	0,40	0,40
SK21E	0,60	1,20	1,20	1,00	1,00	1,00	0,50	1,40	1,10	0,70	0,90	0,90
SK31E	1,10	2,70	2,20	2,30	1,70	1,70	0,80	1,30	1,65	1,10	2,00	2,00
SK41E	1,70	2,60	3,30	2,50	2,60	2,60	1,00	2,60	2,80	1,60	3,30	3,30
SK51E	2,20	4,40	4,70	4,00	3,40	3,40	1,80	3,50	4,10	3,00	3,80	3,80
[L]												
SK02	0,15	0,60	0,70	0,60	0,40	0,40	0,25	0,60	0,60	0,60	0,50	0,50
SK12	0,25	0,75	0,85	0,75	0,50	0,50	0,35	0,85	0,90	0,90	0,60	0,60
SK22	0,50	1,80	1,80	1,80	1,35	1,35	0,70	2,00	2,00	1,80	1,55	1,55
SK32	0,90	2,50	2,50	2,90	2,00	2,00	1,30	2,90	3,30	3,10	2,40	2,40
SK42	1,30	4,50	4,50	4,30	3,20	3,20	1,80	4,40	4,50	4,00	3,70	3,70
SK52	2,50	7,00	6,80	6,80	5,10	5,10	3,00	6,80	6,20	7,40	5,60	5,60
[L]												
SK62	6,50	15,00	13,00	16,00	15,00	15,00	7,00	15,00	14,00	18,50	16,00	16,00
SK72	10,00	23,00	18,00	26,00	23,00	23,00	10,00	23,00	18,50	28,00	23,00	23,00
SK82	14,00	35,00	27,00	44,00	32,00	32,00	15,00	37,00	29,00	45,00	34,50	34,50
SK92	25,00	73,00	47,00	76,00	52,00	52,00	26,00	73,00	47,00	78,00	52,00	52,00
SK102	36,00	79,00	66,00	102,00	71,00	71,00	40,00	81,00	66,00	104,00	72,00	72,00
[L]												
SK03	0,30	1,00	0,80	0,90	0,60	0,60	0,50	0,80	0,90	1,10	0,80	0,80
SK13	0,60	1,25	1,10	1,20	0,70	0,70	0,85	1,20	1,20	1,20	0,95	0,95
SK23	1,30	2,40	2,30	2,35	1,60	1,60	1,50	2,60	2,50	2,80	2,80	2,80
SK33N	1,60	2,90	3,20	3,70	2,30	2,30	2,50	3,40	3,50	4,40	2,60	2,60
SK43	3,00	5,60	5,20	6,60	3,60	3,60	3,50	5,70	5,00	6,10	4,10	4,10
SK53	4,50	8,70	7,70	8,70	6,00	6,00	5,20	8,40	7,00	8,90	6,70	6,70
[L]												
SK63	13,00	14,50	14,50	16,00	13,00	13,00	13,50	14,00	15,50	18,00	14,00	14,00
SK73	20,50	20,00	22,50	27,00	20,00	20,00	22,00	22,50	23,00	27,50	20,00	20,00
SK83	30,00	31,00	34,00	37,00	33,00	33,00	31,00	34,00	35,00	40,00	34,00	34,00
SK93	53,00	70,00	59,00	72,00	49,00	49,00	53,00	70,00	59,00	74,00	49,00	49,00
SK103	74,00	71,00	74,00	97,00	67,00	67,00	69,00	78,00	78,00	99,00	67,00	67,00

[L]							[L]						
⇨ 6.1	M1	M2	M3	M4	M5	M6	⇨ 6.1	M1	M2	M3	M4	M5	M6
SK072.1	0,16	0,32	0,21	0,23	0,18	0,20	SK072.1 F	0,16	0,32	0,21	0,23	0,18	0,20
SK172.1	0,27	0,59	0,42	0,45	0,32	0,39	SK172.1 F	0,27	0,59	0,42	0,45	0,32	0,39
SK372.1	0,45	1,05	0,75	1,00	0,60	0,65	SK372.1 F	0,45	1,05	0,75	1,00	0,60	0,65
SK572.1	0,75	1,90	1,50	2,00	1,10	1,15	SK572.1 F	0,75	1,90	1,50	2,00	1,10	1,15
SK672.1	1,10	2,60	2,15	2,70	1,55	1,65	SK672.1 F	1,10	2,60	2,15	2,70	1,55	1,65
SK772.1	1,15	3,65	2,25	3,15	1,35	2,15	SK772.1 F	1,15	3,65	2,25	3,15	1,35	2,15
SK872.1	3,20	8,00	5,30	7,00	2,80	4,60	SK872.1 F	2,60	8,00	5,30	7,00	2,80	4,60
SK972.1	4,50	12,90	8,10	12,70	4,60	7,80	SK972.1 F	4,50	12,90	8,10	12,70	4,60	7,80
[L]							[L]						
⇨ 6.1	M1	M2	M3	M4	M5	M6	⇨ 6.1	M1	M2	M3	M4	M5	M6
SK373.1	0,45	1,05	0,75	1,00	0,60	0,65	SK373.1 F	0,45	1,05	0,75	1,00	0,60	0,65
SK573.1	0,75	1,90	1,50	2,00	1,10	1,15	SK573.1 F	0,75	1,90	1,50	2,00	1,10	1,15
SK673.1	1,10	2,60	2,15	2,70	1,55	1,65	SK673.1 F	1,10	2,60	2,15	2,70	1,55	1,65
SK773.1	1,95	3,50	3,20	2,90	2,25	2,95	SK773.1 F	1,95	3,50	3,20	2,90	2,25	2,95
SK873.1	4,05	7,60	6,85	6,55	5,00	6,55	SK873.1 F	4,05	7,60	6,85	6,55	5,00	6,55
SK973.1	7,40	12,20	11,10	11,60	8,00	10,90	SK973.1 F	7,40	12,20	11,10	11,60	8,00	10,90

[L]												
⇨ 6.1	M1	M2	M3	M4	M5	M6	M1	M2	M3	M4	M5	M6
⇨ 6.1	B3	V6	B8	V5	B6	B7	B5	V3	B5I	V1	B5II	B5III
SK172	0,35	0,50	0,50	0,50	0,50	0,50	0,35	0,50	0,50	0,50	0,50	0,50
SK272	0,60	1,00	1,00	1,00	1,00	1,00	0,60	1,00	1,00	1,00	1,00	1,00
SK372	0,60	1,00	1,00	1,00	1,00	1,00	0,60	1,00	1,00	1,00	1,00	1,00
SK472	1,00	1,90	1,90	2,00	1,80	1,80	1,00	1,90	1,90	1,90	1,90	1,50
SK572	1,00	1,90	1,90	2,00	1,80	1,80	1,00	1,90	1,90	1,90	1,90	1,50
SK672	1,40	3,40	3,10	3,15	1,45	3,15	1,15	3,40	2,70	2,80	1,25	2,70
SK772	2,00	3,30	3,50	4,20	2,70	3,30	1,60	3,30	3,50	3,30	3,10	3,10
SK872	3,70	9,60	9,10	7,30	4,70	8,00	3,50	9,00	7,90	7,70	3,90	7,20
SK972	6,50	16,00	15,70	14,70	8,50	14,00	6,50	15,00	13,00	13,50	6,50	12,00
[L]												
SK273	0,62	1,10	1,10	1,10	1,10	1,10	0,62	1,10	1,10	1,10	1,10	1,10
SK373	0,55	1,10	1,10	1,10	1,10	1,10	0,55	1,10	1,10	1,10	1,10	1,10
SK473	1,30	2,50	2,10	2,40	2,10	2,10	1,25	2,40	2,10	2,50	2,10	2,10
SK573	1,30	2,50	2,10	2,40	2,10	2,10	1,25	2,40	2,10	2,50	2,10	2,10
SK673	1,80	3,80	3,20	3,40	2,90	3,00	1,70	3,80	3,00	3,20	3,00	3,00
SK773	2,50	4,50	3,70	4,60	3,30	3,30	2,30	5,00	3,60	4,50	3,90	3,90
SK873	6,20	8,40	7,50	9,10	7,50	7,50	5,00	8,80	7,60	8,00	8,00	8,00
SK973	11,00	15,80	13,00	16,00	13,30	13,00	10,30	16,50	13,00	16,00	14,00	14,00

[L]							[L]						
⇨ 6.1	M1	M2	M3	M4	M5	M6	⇨ 6.1	M1	M2	M3	M4	M5	M6
SK0	0,13	0,22	0,13	0,22	0,13	0,13	SK0 F	0,13	0,22	0,13	0,22	0,13	0,13
SK01	0,22	0,38	0,22	0,38	0,22	0,22	SK01 F	0,22	0,38	0,22	0,38	0,22	0,22
SK20	0,55	1,00	0,55	1,00	0,55	0,55	SK20 F	0,35	0,60	0,35	0,60	0,35	0,35
SK25	0,50	0,90	0,50	0,90	0,50	0,50	SK25 F	0,50	0,90	0,50	0,90	0,50	0,50
SK30	0,80	1,40	0,70	1,40	0,70	0,70	SK30 F	0,80	1,40	0,70	1,10	0,70	0,70
SK33	0,80	1,60	1,00	1,60	0,80	1,00	SK33 F	1,00	1,60	1,00	1,60	0,80	1,00
SK000	0,24	0,41	0,24	0,41	0,24	0,24	SK000 F	0,24	0,41	0,24	0,41	0,24	0,24
SK010	0,38	0,60	0,38	0,60	0,38	0,38	SK010 F	0,38	0,60	0,38	0,60	0,38	0,38
SK200	0,80	1,30	0,80	1,30	0,80	0,80	SK200 F	0,60	1,04	0,60	1,04	0,60	0,60
SK250	1,40	1,50	1,40	1,50	1,40	1,40	SK250 F	1,40	1,50	1,40	1,50	1,40	1,40
SK300	1,40	1,50	1,40	1,50	1,40	1,40	SK300 F	1,40	1,50	1,40	1,50	1,40	1,40
SK330	1,50	1,58	1,50	1,58	1,50	1,50	SK330 F	2,00	1,58	1,50	2,80	1,50	1,50

[L]							[L]						
⇨ 6.1	M1	M2	M3	M4	M5	M6	⇨ 6.1	M1	M2	M3	M4	M5	M6
⇨ 6.1	H1	H6	H2	H5	H4	H3	⇨ 6.1	H1	H6	H2	H5	H4	H3
SK0182NB A	0,40	0,55	0,60	0,55	0,35	0,35							
SK0282NB A	0,70	1,00	0,80	1,10	0,90	0,90							
							SK1382NB A	1,30	2,30	1,40	2,10	2,00	1,90
[L]							[L]						
SK1282 A	0,90	1,30	0,90	1,20	0,95	0,95							
SK2282 A	1,65	2,40	1,90	2,00	1,80	1,80	SK2382 A	1,70	2,60	1,90	3,10	1,50	1,50
SK3282 A	3,15	4,10	3,25	4,10	3,15	3,15	SK3382 A	4,10	4,90	3,30	5,60	3,30	3,30
SK4282 A	4,70	6,10	4,75	5,40	4,70	4,70	SK4382 A	5,90	6,80	4,90	8,30	4,90	4,90
SK5282 A	7,50	8,80	7,50	8,80	7,20	7,20	SK5382 A	12,50	12,00	6,70	14,00	8,30	8,30
[L]							[L]						
SK6282 A	17,00	14,00	12,00	17,50	10,00	14,00	SK6382 A	16,50	13,00	9,60	18,00	14,00	12,50
SK7282 A	25,00	21,00	20,00	27,00	16,00	21,00	SK7382 A	22,00	20,00	16,00	25,00	23,00	19,00
SK8282 A	37,00	33,00	30,00	41,00	31,00	31,00	SK8382 A	34,00	32,00	25,00	38,00	35,00	30,00
SK9282 A	74,00	70,00	55,00	72,00	60,00	59,00	SK9382 A	73,00	70,00	45,00	74,00	65,00	60,00
[L]							[L]						
SK10282 A	90	90	40	90	60	82	SK10382 A	85	100	73	100	80	80
SK11282 A	165	160	145	195	100	140	SK11382 A	160	155	140	210	155	135
							SK12382 A	160	155	140	210	155	135

* ⇨ 38

[L]												
⇨ 6.1	M1	M2	M3	M4	M5	M6	M1	M2	M3	M4	M5	M6
⇨ 6.1	B3	B6	B8	B3I	V5	V6	B5I	B5	B5III	B5II	V1	V3
							H1	H4	H2	H3	H5	H6
SK92072	0,40	0,60	0,50	0,50	0,40	0,40	0,40	0,60	0,50	0,50	0,40	0,40
SK92172	0,55	0,90	0,95	1,10	0,75	0,62	0,50	0,92	0,87	1,05	0,75	0,65
SK92372	0,90	1,30	1,45	1,60	1,20	1,20	1,15	1,50	1,20	1,70	1,15	1,15
SK92672	1,80	3,50	3,20	3,40	2,60	2,60	1,55	2,80	2,50	3,30	2,40	2,40
SK92772	2,30	4,50	4,60	5,30	4,10	4,10	2,75	4,40	4,50	5,50	3,50	3,50
[L]												
SK9012.1	0,70	1,60	1,90	2,40	1,20	1,70	0,70	1,90	1,90	2,10	1,20	1,70
SK9016.1	0,70	1,60	1,90	2,40	1,20	1,70	0,70	1,90	1,90	2,10	1,20	1,70
SK9022.1	1,30	2,60	3,50	4,20	2,00	2,80	1,30	2,60	3,50	4,20	2,00	2,80
SK9032.1	1,70	4,80	6,40	6,70	4,10	5,10	1,90	5,20	6,40	7,30	3,30	5,10
SK9042.1	4,40	8,70	10,00	9,80	6,80	7,50	3,60	9,70	11,40	11,50	6,50	8,20
SK9052.1	6,50	16,00	19,00	21,50	11,00	15,50	7,50	16,50	20,00	22,50	11,50	18,00
SK9062.1	10,00	27,50	32,00	36,00	18,00	24,00	12,00	27,50	33,00	38,50	19,00	26,00
SK9072.1	10,00	27,50	32,00	36,00	18,00	24,00	12,00	27,50	33,00	38,50	19,00	26,00
SK9082.1	17,00	51,50	62,50	71,50	33,00	46,50	21,00	54,00	66,00	80,00	38,00	52,00
SK9086.1	29,00	73,00	85,00	102,00	48,00	62,00	36,00	78,00	91,00	107,00	53,00	76,00
SK9092.1	41,00	157,00	170,00	172,00	80,00	90,00	40,00	130,00	154,00	175,00	82,00	91,00
SK9096.1	70,00	187,00	194,00	254,00	109,00	152,00	80,00	187,00	193,00	257,00	113,00	156,00
[L]												
SK9013.1	1,20	2,00	2,20	3,00	1,40	1,90	1,20	2,30	2,20	3,00	1,40	1,90
SK9017.1	1,20	2,00	2,20	3,00	1,40	1,90	1,20	2,30	2,20	3,00	1,40	1,90
SK9023.1	2,40	3,00	3,80	5,30	2,20	3,10	2,40	3,00	3,80	5,30	2,20	3,10
SK9033.1	3,30	6,60	7,00	7,80	4,30	5,10	3,80	5,70	6,90	8,50	3,60	5,60
SK9043.1	4,60	10,20	10,70	12,80	5,20	6,70	5,70	10,20	14,70	14,70	6,60	9,60
SK9053.1	10,00	17,00	20,00	24,20	11,50	16,50	12,50	18,00	21,50	26,50	13,00	17,00

[L]							[L]						
⇨ 6.1	M1	M2	M3	M4	M5	M6		M1	M2	M3	M4	M5	M6
⇨ 6.1	B3	B6	B8	B3I	V5	V6		B5I	B5	B5III	B5II	V1	V3
⇨ 6.1								H1	H4	H2	H3	H5	H6
SK02040	0,45	0,60	0,60	0,60	0,50	0,50	SK02040 A	0,40	0,80	0,65	0,60	0,50	0,50
SK02050	0,40	1,20	0,70	1,15	0,70	0,70	SK02050 A	0,45	1,10	0,90	1,10	0,80	0,80
SK12063	0,60	1,70	1,20	1,55	1,00	1,00	SK12063 A	0,50	1,45	1,20	1,40	1,10	1,10
SK12080	0,80	2,60	1,70	2,70	1,70	1,70	SK12080 A	0,90	3,10	3,00	3,00	2,20	2,20
SK32100	1,60	5,50	3,40	5,40	3,20	3,20	SK32100 A	1,50	5,20	3,80	5,30	3,80	3,80
SK42125	2,80	11,00	6,20	10,30	5,80	5,80	SK42125 A	3,20	12,90	6,10	10,50	6,30	6,30
[L]							[L]						
SK13050	0,95	1,55	1,10	1,45	0,95	0,95	SK13050 A	0,85	1,75	1,25	1,35	1,15	1,15
SK13063	0,85	2,30	1,60	2,00	1,25	1,25	SK13063 A	0,90	2,10	1,55	2,10	1,45	1,45
SK13080	1,70	3,20	2,10	3,40	1,95	1,95	SK13080 A	1,70	3,75	3,60	3,60	2,55	2,55
SK33100	2,10	7,60	4,00	6,80	3,70	3,70	SK33100 A	2,10	6,10	4,80	6,60	4,20	4,20
SK43125	7,80	14,00	7,20	13,50	6,70	6,70	SK43125 A	4,80	13,50	7,40	14,50	8,00	8,00
[L]							[L]						
SK02040 F	0,50	0,80	0,75	0,60	0,50	0,50							
SK02050 F	0,45	1,40	0,90	1,25	1,00	1,00	SK13050 F	0,90	1,80	1,15	1,75	1,25	1,25
SK12063 F	0,50	1,60	1,40	1,80	1,50	1,50	SK13063 F	0,95	2,10	1,65	2,15	1,75	1,75
SK12080 F	0,95	3,20	3,10	3,70	2,50	2,50	SK13080 F	1,40	4,20	3,35	4,20	2,75	2,75
SK32100 F	1,50	7,10	4,90	7,10	4,40	4,40	SK33100 F	2,30	7,60	5,50	7,80	4,85	4,85
SK42125 F	3,30	11,20	6,10	10,40	6,80	6,80	SK43125 F	4,30	14,50	7,10	12,10	7,70	7,70

Intelligent Drivesystems, Worldwide Services

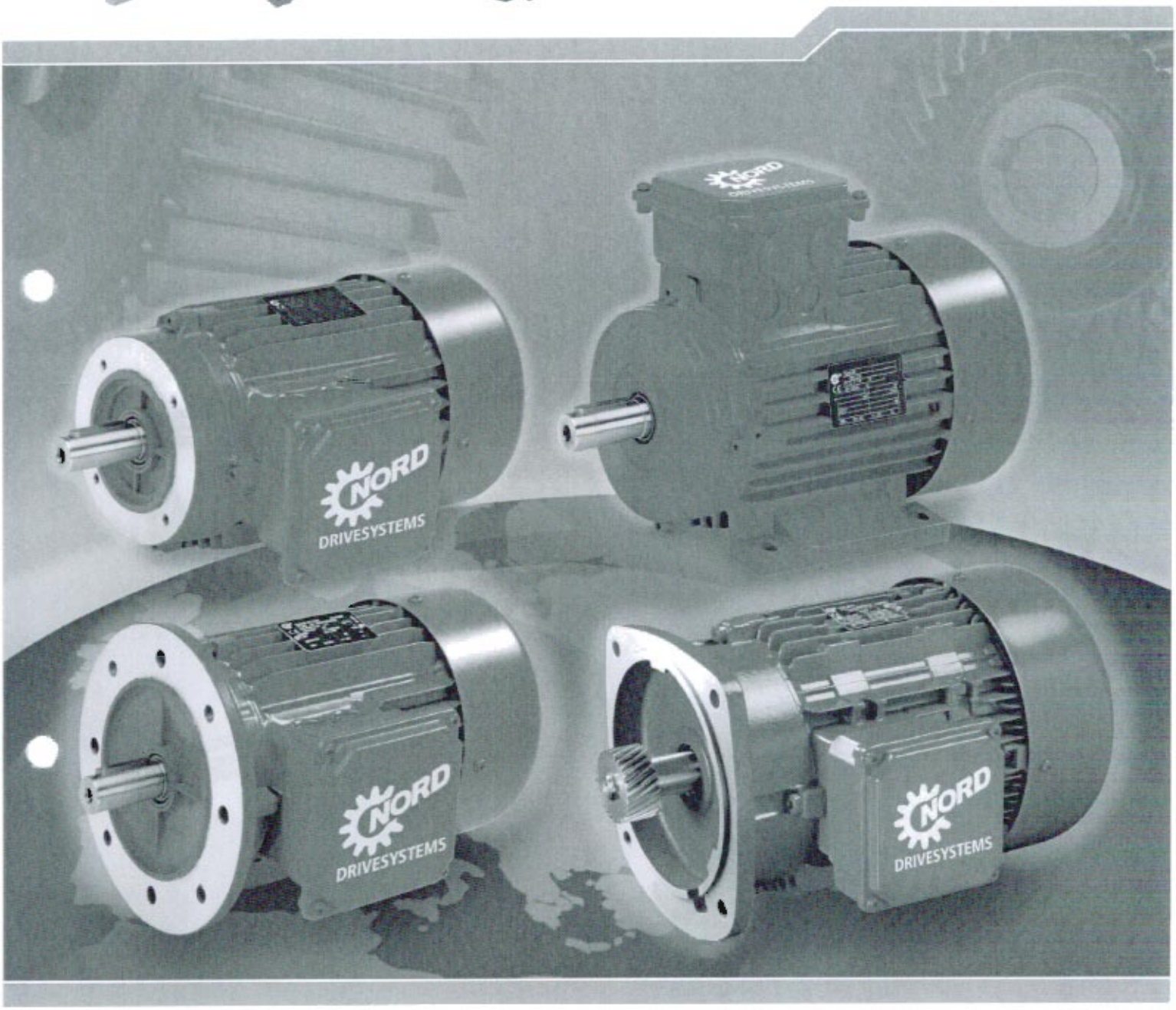

DE GB FR

PL1090

Ersatzteilkatalog Motoren
Spare parts catalogue Motors
Catalogue de pièces de rechange Moteurs

NORD
DRIVESYSTEMS

Inhaltsübersicht
Table Of Contents
Sommaire

Allgemeine Ersatzteile
General parts list
Vues éclatées et nomenclature

Motoren
Motors
Moteurs

IEC B3+B5 - Motor Größe 63-180 ..... 2 - 3
IEC B3+B5 - Motor size 63 - 180
IEC B3+B5 - Moteur à hauteur d'axe 63-180

IEC B3+B5 - Bremsmotor Größe 63-180 ..... 4 - 5
IEC B3+B5 - Brake motor size 63 - 180
IEC B3+B5 - Moteur frein à hauteur d'axe 63-180

Motor nach Werknorm B5 Größe 63-180 ..... 6 - 7
Motor according to works standard B5, size 63-180
Moteur selon la spécification B5 à hauteur d'axe 63-180

Bremsmotor nach Werknorm B5 Größe 63-180 ..... 8 - 9
Brake motor according to works standard B5, size 63-180
Moteur frein selon la spécification B5 à hauteur d'axe 63-180

Motor nach Werknorm B14 Größe 63-160 ..... 10 - 11
Motor according to works standard B14, size 63-160
Moteur selon la spécification B14 à hauteur d'axe 63-160

Bremsmotor nach Werknorm B14 Größe 63-160 ..... 12 - 13
Brake motor according to works standard B14, size 63-160
Moteur frein selon la spécification B14 à hauteur d'axe 63-160

Bestellangaben ..... 14 - 15
Order details
Informations de commande

IEC B3+B5 - Motor Größe 63-180
IEC B3+B5 - Motor size 63 - 180
IEC B3+B5 - Moteur à hauteur d'axe 63-180

DE		GB		FR	
9000	Läufer	9000	Rotor	9000	Rotor
9001	Paßfeder	9001	Parallel key	9001	Clavette
9003	Paßfeder	9003	Parallel key	9003	Clavette
9006	Sicherungsring	9006	Circlip	9006	Circlip
9020	A-Lagerschild	9020	A bearing cover	9020	Flasque A
9021	Schraube	9021	Screw	9021	Vis
9022	Schraubensicherung	9022	Screw securing	9022	Frein de vis
9040	Wellendichtring	9040	Radial packing ring	9040	Bague d'étanchéité sur l arbre
9050	Kugellager	9050	Ball bearing	9050	Roulement à billes
9060	Kugellager-Ausgleichscheibe	9060	Ball bearing spacer washer	9060	Cale de compensation des roulements à billes
9070	Klemmenkastenrahmen	9070	Terminal box frame	9070	Cadre de la boîte à bornes
9071	Schraube	9071	Screw	9071	Vis
9072	Blindverschlußstopfen	9072	Blind plug	9072	Bouchon aveugle
9080	Klemmenkastendeckel	9080	Terminal box cover	9080	Couvercle de boîte à bornes
9081	Schraube	9081	Screw	9081	Vis
9090	Dichtung	9090	Gasket	9090	Bague d'étanchéité
9100	Dichtung	9100	Gasket	9100	Bague d'étanchéité
9160	Stator gewickelt	9160	Wound stator	9160	Stator bobiné
9240	Motorfuß	9240	Motor foot	9240	Pied de moteur
9241	Schraube	9241	Screw	9241	Vis
9242	Federring	9242	Spring lock washer	9242	Rondelle élastique
9243	Sechskantmutter	9243	Hexagonal nut	9243	Écrou à six pans
9260	Dichtung	9260	Gasket	9260	Bague d'étanchéité
9290	Kugellager	9290	Ball bearing	9290	Roulement à billes
9320	B-Lagerschild	9320	B-bearing cover	9320	Flasque B
9321	Schraube	9321	Screw	9321	Vis
9323	Sicherungsring	9323	Circlip	9323	Circlip
9330	Wellendichtring	9330	Radial packing ring	9330	Bague d'étanchéité sur l'arbre
9390	Lüfter	9390	Fan	9390	Ventilateur
9400	Lüfterhaube	9400	Fan cover	9400	Capot du ventilateur
9401	Schraube	9401	Screw	9401	Vis
9420	Schutzdach	9420	Protective shield	9420	Tôle parapluie
9430	Doppelte Lüfterhaube	9430	Double fan cover	9430	Double capot de ventilateur
9520	Klemmbuchse	9520	Clamping bush	9520	Douille de serrage

IEC B3+B5 - Bremsmotor Größe 63-180
IEC B3+B5 - Brake motor size 63 - 180
IEC B3+B5 - Moteur frein à hauteur d'axe 63-180

DE		GB		FR	
9000	Laufer	9000	Rotor	9000	Rotor
9001	Paßfeder	9001	Parallel key	9001	Clavette
9003	Paßfeder	9003	Parallel key	9003	Clavette
9005	Sicherungsring	9005	Circlip	9005	Circlip
9006	Sicherungsring	9006	Circlip	9006	Circlip
9007	Paßfeder	9007	Parallel key	9007	Clavette
9008	Paßfeder	9008	Parallel key	9008	Clavette
9020	A-Lagerschild	9020	A bearing cover	9020	Flasque A
9021	Schraube	9021	Screw	9021	Vis
9022	Schraubensicherung	9022	Screw securing	9022	Frein de vis
9040	Wellendichtring	9040	Radial packing ring	9040	Bague d'étanchéité sur l arbre
9050	Kugellager	9050	Ball bearing	9050	Roulement à billes
9060	Kugellager-Ausgleichscheibe	9060	Ball bearing spacer washer	9060	Cale de compensation des roulements à billes
9070	Klemmenkastenrahmen	9070	Terminal box frame	9070	Cadre de la boîte à bornes
9071	Schraube	9071	Screw	9071	Vis
9072	Blindverschlußstopfen	9072	Blind plug	9072	Bouchon aveugle
9075	Blindstopfen	9075	Blind plug	9075	Bouchon borgne
9076	Kabelverschraubung	9076	Cable gland	9076	Passe-câbles à vis
9080	Klemmenkastendeckel	9080	Terminal box cover	9080	Couvercle de boîte à bornes
9081	Schraube	9081	Screw	9081	Vis
9090	Dichtung	9090	Gasket	9090	Bague d'étanchéité
9100	Dichtung	9100	Gasket	9100	Bague d'étanchéité
9110	2-poliges Klemmbrett	9110	2-pole terminal board	9110	Plaque à bornes à 2 pôles
9111	Schraube	9111	Screw	9111	Vis
9120	Gleichrichter	9120	Rectifier	9120	Redresseur
9121	Schraube	9121	Screw	9121	Vis
9160	Stator gewickelt	9160	Wound stator	9160	Stator bobiné
9240	Motorfuß	9240	Motor foot	9240	Pied de moteur
9241	Schraube	9241	Screw	9241	Vis
9242	Federring	9242	Spring lock washer	9242	Rondelle élastique
9243	Sechskantmutter	9243	Hexagonal nut	9243	Écrou à six pans
9260	Dichtung	9260	Gasket	9260	Bague d'étanchéité
9290	Kugellager	9290	Ball bearing	9290	Roulement à billes
9320	B-Lagerschild	9320	B-bearing cover	9320	Flasque B
9321	Schraube	9321	Screw	9321	Vis
9323	Sicherungsring	9323	Circlip	9323	Circlip
9330	Wellendichtring	9330	Radial packing ring	9330	Bague d'étanchéité sur l'arbre
9360	Dichtung	9360	Gasket	9360	Bague d'étanchéité
9370	Handlüftung	9370	Manual brake release	9370	Déblocage manuel du frein
9380	Bremsenmitnehmer	9380	Brake dog	9380	Entraîneur de frein
9383	Buchse	9383	Socket	9383	Douille
9390	Lüfter	9390	Fan	9390	Ventilateur
9400	Lüfterhaube	9400	Fan cover	9400	Capot du ventilateur
9401	Schraube	9401	Screw	9401	Vis
9420	Schutzdach	9420	Protective shield	9420	Tôle parapluie
9430	Doppelte Lüfterhaube	9430	Double fan cover	9430	Double capot de ventilateur
9520	Klemmenbuchse	9520	Clamping bush	9520	Douille de serrage
9900	Reibblech	9900	Rubbing plate	9900	Tôle de frottement

Motor nach Werknorm B5 Größe 63-180
Motor according to works standard B5, size 63-180
Moteur selon la spécification B5 à hauteur d'axe 63-180

DE		GB		FR	
9000	Läufer	9000	Rotor	9000	Rotor
9001	Paßfeder	9001	Parallel key	9001	Clavette
9003	Paßfeder	9003	Parallel key	9003	Clavette
9006	Sicherungsring	9006	Circlip	9006	Circlip
9020	A-Lagerschild	9020	A bearing cover	9020	Flasque A
9021	Schraube	9021	Screw	9021	Vis
9040	Wellendichtring	9040	Radial packing ring	9040	Bague d'étanchéite sur l'arbre
9050	Kugellager	9050	Ball bearing	9050	Roulement à billes
9060	Kugellager-Ausgleichscheibe	9060	Ball bearing spacer washer	9060	Cale de compensation des roulements a billes
9070	Klemmenkastenrahmen	9070	Terminal box frame	9070	Cadre de la boite à bornes
9071	Schraube	9071	Screw	9071	Vis
9075	Blindstopfen	9075	Blind plug	9075	Bouchon borgne
9080	Klemmenkastendeckel	9080	Terminal box cover	9080	Couvercle de boite à bornes
9081	Schraube	9081	Screw	9081	Vis
9090	Dichtung	9090	Gasket	9090	Bague d'étanchéité
9100	Dichtung	9100	Gasket	9100	Bague d'étanchéité
9160	Stator gewickelt	9160	Wound stator	9160	Stator bobiné
9260	Dichtung	9260	Gasket	9260	Bague d'étanchéité
9290	Kugellager	9290	Ball bearing	9290	Roulement à billes
9320	B-Lagerschild	9320	B-bearing cover	9320	Flasque B
9321	Schraube	9321	Screw	9321	Vis
9323	Sicherungsring	9323	Circlip	9323	Circlip
9330	Wellendichtring	9330	Radial packing ring	9330	Bague d'étanchéité sur l'arbre
9390	Lüfter	9390	Fan	9390	Ventilateur
9400	Lüfterhaube	9400	Fan cover	9400	Capot du ventilateur
9401	Schraube	9401	Screw	9401	Vis
9420	Schutzdach	9420	Protective shield	9420	Tôle parapluie
9430	Doppelte Lüfterhaube	9430	Double fan cover	9430	Double capot de ventilateur
9520	Klemmbuchse	9520	Clamping bush	9520	Douille de serrage

Bremsmotor nach Werknorm B5 Größe 63-180
Brake motor according to works standard B5, size 63-180
Moteur selon la spécification B5 à hauteur d'axe 63-180

DE		GB		FR	
9000	Läufer	9000	Rotor	9000	Rotor
9001	Paßfeder	9001	Parallel key	9001	Clavette
9003	Paßfeder	9003	Parallel key	9003	Clavette
9005	Sicherungsring	9005	Circlip	9005	Circlip
9006	Sicherungsring	9006	Circlip	9006	Circlip
9007	Paßfeder	9007	Parallel key	9007	Clavette
9008	Paßfeder	9008	Parallel key	9008	Clavette
9020	A-Lagerschild	9020	A bearing cover	9020	Flasque A
9021	Schraube	9021	Screw	9021	Vis
9040	Wellendichtring	9040	Radial packing ring	9040	Bague d'étanchéité sur l'arbre
9050	Kugellager	9050	Ball bearing	9050	Roulement à billes
9060	Kugellager-Ausgleichscheibe	9060	Ball bearing spacer washer	9060	Cale de compensation des roulements à billes
9070	Klemmenkastenrahmen	9070	Terminal box frame	9070	Cadre de la boîte à bornes
9071	Schraube	9071	Screw	9071	Vis
9075	Blindstopfen	9075	Blind plug	9075	Bouchon borgne
9076	Kabelverschraubung	9076	Cable gland	9076	Passe-câbles à vis
9080	Klemmenkastendeckel	9080	Terminal box cover	9080	Couvercle de boîte à bornes
9081	Schraube	9081	Screw	9081	Vis
9090	Dichtung	9090	Gasket	9090	Bague d'étanchéité
9100	Dichtung	9100	Gasket	9100	Bague d'étanchéité
9110	2-poliges Klemmbrett	9110	2-pole terminal board	9110	Plaque à bornes à 2 pôles
9111	Schraube	9111	Screw	9111	Vis
9120	Gleichrichter	9120	Rectifier	9120	Redresseur
9121	Schraube	9121	Screw	9121	Vis
9160	Stator gewickelt	9160	Wound stator	9160	Stator bobiné
9260	Dichtung	9260	Gasket	9260	Bague d'étanchéité
9290	Kugellager	9290	Ball bearing	9290	Roulement à billes
9320	B-Lagerschild	9320	B-bearing cover	9320	Flasque B
9321	Schraube	9321	Screw	9321	Vis
9323	Sicherungsring	9323	Circlip	9323	Circlip
9330	Wellendichtring	9330	Radial packing ring	9330	Bague d'étanchéité sur l'arbre
9360	Dichtung	9360	Gasket	9360	Bague d'étanchéité
9370	Handlüftung	9370	Manual brake release	9370	Déblocage manuel du frein
9380	Bremsenmitnehmer	9380	Brake dog	9380	Entraîneur de frein
9383	Buchse	9383	Socket	9383	Douille
9390	Lüfter	9390	Fan	9390	Ventilateur
9400	Lüfterhaube	9400	Fan cover	9400	Capot du ventilateur
9401	Schraube	9401	Screw	9401	Vis
9420	Schutzdach	9420	Protective shield	9420	Tôle parapluie
9430	Doppelte Lüfterhaube	9430	Double fan cover	9430	Double capot de ventilateur
9900	Reibblech	9900	Rubbing plate	9900	Tôle de frottement

Motor nach Werknorm B14 Größe 63-160
Motor according to works standard B14, size 63-160
Moteur selon la spécification B14 à hauteur d'axe 63-160

DE		GB		FR	
9000	Läufer	9000	Rotor	9000	Rotor
9001	Paßfeder	9001	Parallel key	9001	Clavette
9003	Paßfeder	9003	Parallel key	9003	Clavette
9006	Sicherungsring	9006	Circlip	9006	Circlip
9020	A-Lagerschild	9020	A bearing cover	9020	Flasque A
9021	Schraube	9021	Screw	9021	Vis
9040	Wellendichtring	9040	Radial packing ring	9040	Bague d'étanchéité sur l'arbre
9050	Kugellager	9050	Ball bearing	9050	Roulement à billes
9060	Kugellager-Ausgleichscheibe	9060	Ball bearing spacer washer	9060	Cale de compensation des roulements à billes
9070	Klemmenkastenrahmen	9070	Terminal box frame	9070	Cadre de la boîte à bornes
9071	Schraube	9071	Screw	9071	Vis
9072	Blindverschlußstopfen	9072	Blind plug	9072	Bouchon aveugle
9080	Klemmenkastendeckel	9080	Terminal box cover	9080	Couvercle de boîte à bornes
9081	Schraube	9081	Screw	9081	Vis
9090	Dichtung	9090	Gasket	9090	Bague d'étanchéité
9100	Dichtung	9100	Gasket	9100	Bague d'étanchéité
9160	Stator gewickelt	9160	Wound stator	9160	Stator bobiné
9243	Sechskantmutter	9243	Hexagonal nut	9243	Écrou à six pans
9260	Dichtung	9260	Gasket	9260	Bague d'étanchéité
9290	Kugellager	9290	Ball bearing	9290	Roulement à billes
9321	Schraube	9321	Screw	9321	Vis
9323	Sicherungsring	9323	Circlip	9323	Circlip
9330	Wellendichtring	9330	Radial packing ring	9330	Bague d'étanchéité sur l'arbre
9390	Lüfter	9390	Fan	9390	Ventilateur
9400	Lüfterhaube	9400	Fan cover	9400	Capot du ventilateur
9401	Schraube	9401	Screw	9401	Vis
9420	Schutzdach	9420	Protective shield	9420	Tôle parapluie
9430	Doppelte Lüfterhaube	9430	Double fan cover	9430	Double capot de ventilateur
9520	Klemmbuchse	9520	Clamping bush	9520	Douille de serrage

Bremsmotor nach Werknorm B14 Größe 63-160
Brake motor according to works standard B14, size 63-160
Moteur frein selon la spécification B14 à hauteur d'axe 63-160

DE		GB		FR	
9001	Paßfeder	9001	Parallel key	9001	Clavette
9003	Paßfeder	9003	Parallel key	9003	Clavette
9005	Sicherungsring	9005	Circlip	9005	Circlip
9006	Sicherungsring	9006	Circlip	9006	Circlip
9007	Paßfeder	9007	Parallel key	9007	Clavette
9008	Paßfeder	9008	Parallel key	9008	Clavette
9020	A-Lagerschild	9020	A bearing cover	9020	Flasque A
9021	Schraube	9021	Screw	9021	Vis
9040	Wellendichtring	9040	Radial packing ring	9040	Bague d'étanchéité sur l'arbre
9050	Kugellager	9050	Ball bearing	9050	Roulement à billes
9060	Kugellager-Ausgleichscheibe	9060	Ball bearing spacer washer	9060	Cale de compensation des roulements à billes
9070	Klemmenkastenrahmen	9070	Terminal box frame	9070	Cadre de la boîte à bornes
9071	Schraube	9071	Screw	9071	Vis
9075	Blindstopfen	9075	Blind plug	9075	Bouchon borgne
9076	Kabelverschraubung	9076	Cable gland	9076	Passe-câbles à vis
9080	Klemmenkastendeckel	9080	Terminal box cover	9080	Couvercle de boîte à bornes
9081	Schraube	9081	Screw	9081	Vis
9090	Dichtung	9090	Gasket	9090	Bague d'étanchéité
9100	Dichtung	9100	Gasket	9100	Bague d'étanchéité
9110	2-poliges Klemmbrett	9110	2-pole terminal board	9110	Plaque à bornes à 2 pôles
9111	Schraube	9111	Screw	9111	Vis
9120	Gleichrichter	9120	Rectifier	9120	Redresseur
9121	Schraube	9121	Screw	9121	Vis
9160	Stator gewickelt	9160	Wound stator	9160	Stator bobiné
9260	Dichtung	9260	Gasket	9260	Bague d'étanchéité
9290	Kugellager	9290	Ball bearing	9290	Roulement à billes
9320	B-Lagerschild	9320	B-bearing cover	9320	Flasque B
9321	Schraube	9321	Screw	9321	Vis
9323	Sicherungsring	9323	Circlip	9323	Circlip
9330	Wellendichtring	9330	Radial packing ring	9330	Bague d'étanchéité sur l'arbre
9360	Dichtung	9360	Gasket	9360	Bague d'étanchéité
9370	Handlüftung	9370	Manual brake release	9370	Déblocage manuel du frein
9380	Bremsenmitnehmer	9380	Brake dog	9380	Entraîneur de frein
9383	Buchse	9383	Socket	9383	Douille
9390	Lüfter	9390	Fan	9390	Ventilateur
9400	Lüfterhaube	9400	Fan cover	9400	Capot du ventilateur
9401	Schraube	9401	Screw	9401	Vis
9420	Schutzdach	9420	Protective shield	9420	Tôle parapluie
9430	Doppelte Lüfterhaube	9430	Double fan cover	9430	Double capot de ventilateur
9900	Reibblech	9900	Rubbing plate	9900	Tôle de frottement

Bestellangaben
Order details
Informations de commande

Kontaktdaten / Contact details / Contacts:

Getriebebau NORD

Rudolf-Diesel-Straße 1
D-22941 Bargteheide
Telefon +49(0) 4532/289-0
Telefax +49(0) 4532/401-253
E-Mail info@nord.com
www.nord.com

Firma / Company / Entreprise:

Straße / Street / Rue

Stadt / Town / Ville:

PLZ / Postcode/ Code postal:

Telefon / Telephone / Téléphone:

Fax:

E-mail

Ersatzteil-Bestellung / Replacement parts order / Commande de pièces de rechange:

Bezeichnung / Designation / Désignation:

Pos.-Nr. / Item No / N° pos :

Stückzahl / Pieces / Quantité:

Motortyp / Motor type / Type de moteur:

Fabrikationsnummer / Serial No. / Numéro de série:

DE

Diese NORD Ersatzteilliste beinhaltet eine standardisierte Darstellung der NORD Motoren. Um Ihnen das Finden und Nachbestellen von Ersatzteilen zu erleichtern, finden Sie am Ende der Ersatzteilliste ein Bestellformular mit wichtigen Hinweisen zur Bestimmung der richtigen Teile.

Für Rückfragen stehen wir Ihnen gerne zur Verfügung. Ihren lokalen Ansprechpartner finden Sie unter http://locator.nord.com.

GB

This NORD spare parts list contains a standardised depiction of NORD motors. In order to enable you to find and re-order replacement parts more easily, you can find an order form and important information regarding the identification of the correct components at the end of this spare parts list.

We will be glad to help you if you have any queries: You can find your local contact partner under http://locator.nord.com.

FR

Cette liste de pièces de rechange NORD contient une représentation standard des moteurs NORD. Pour faciliter la recherche et la commande de pièces de rechange, un formulaire de commande se trouve à la fin de la liste des pièces de rechange et vous donne toutes les informations essentielles pour déterminer les pièces dont vous avez besoin.

En cas de questions, n'hésitez pas à nous contacter. Pour connaître votre interlocuteur local, veuillez consulter le site http://locator.nord.com.

IEC B3+B5 - Motor Größe 63-180
IEC B3+B5 - Motor size 63 - 180
IEC B3+B5 - Moteur à hauteur d'axe 63-180

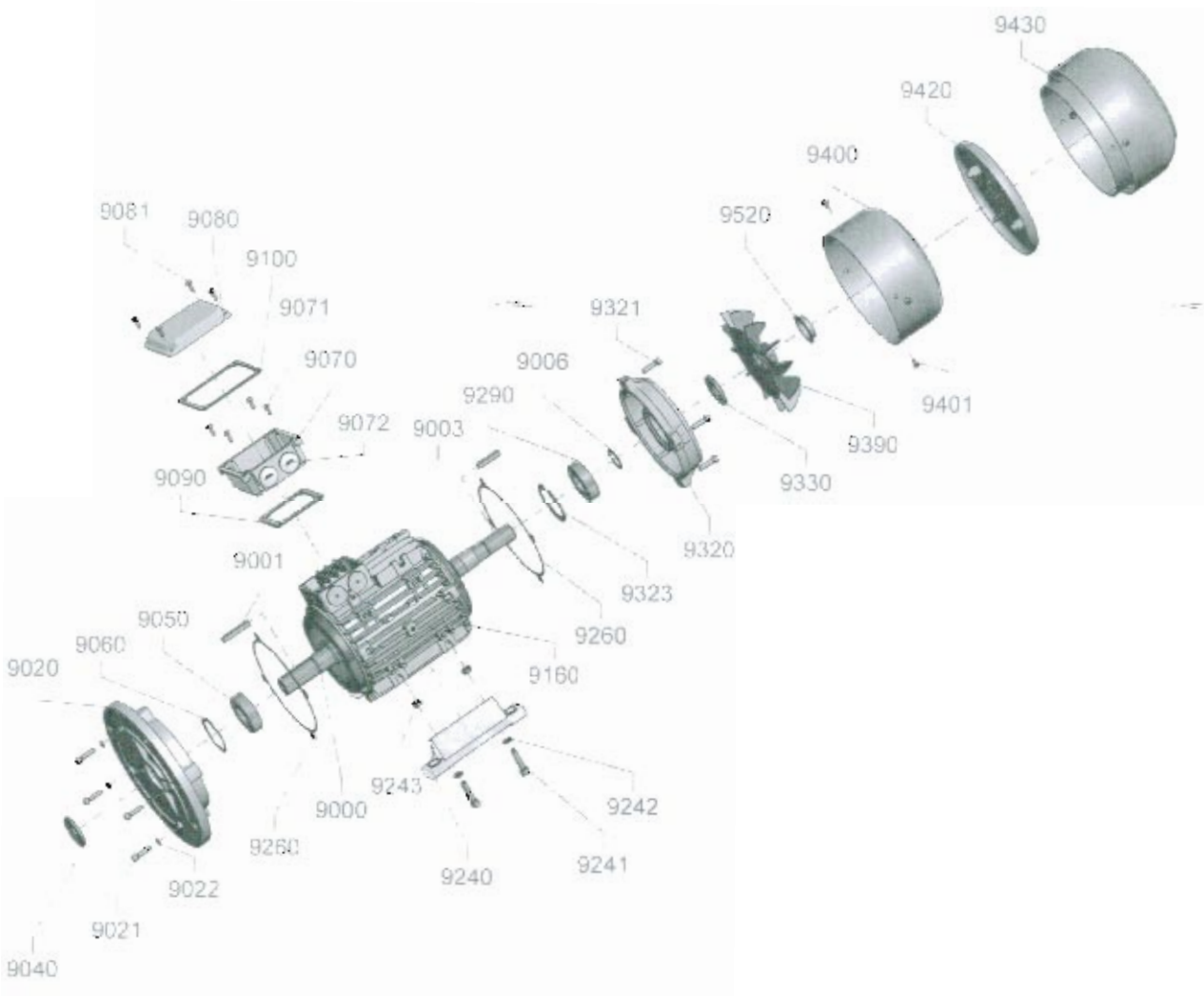

IEC B3+B5 - Bremsmotor Größe 63-180
IEC B3+B5 - Brake motor size 63 - 180
IEC B3+B5 - Moteur frein à hauteur d'axe 63-180

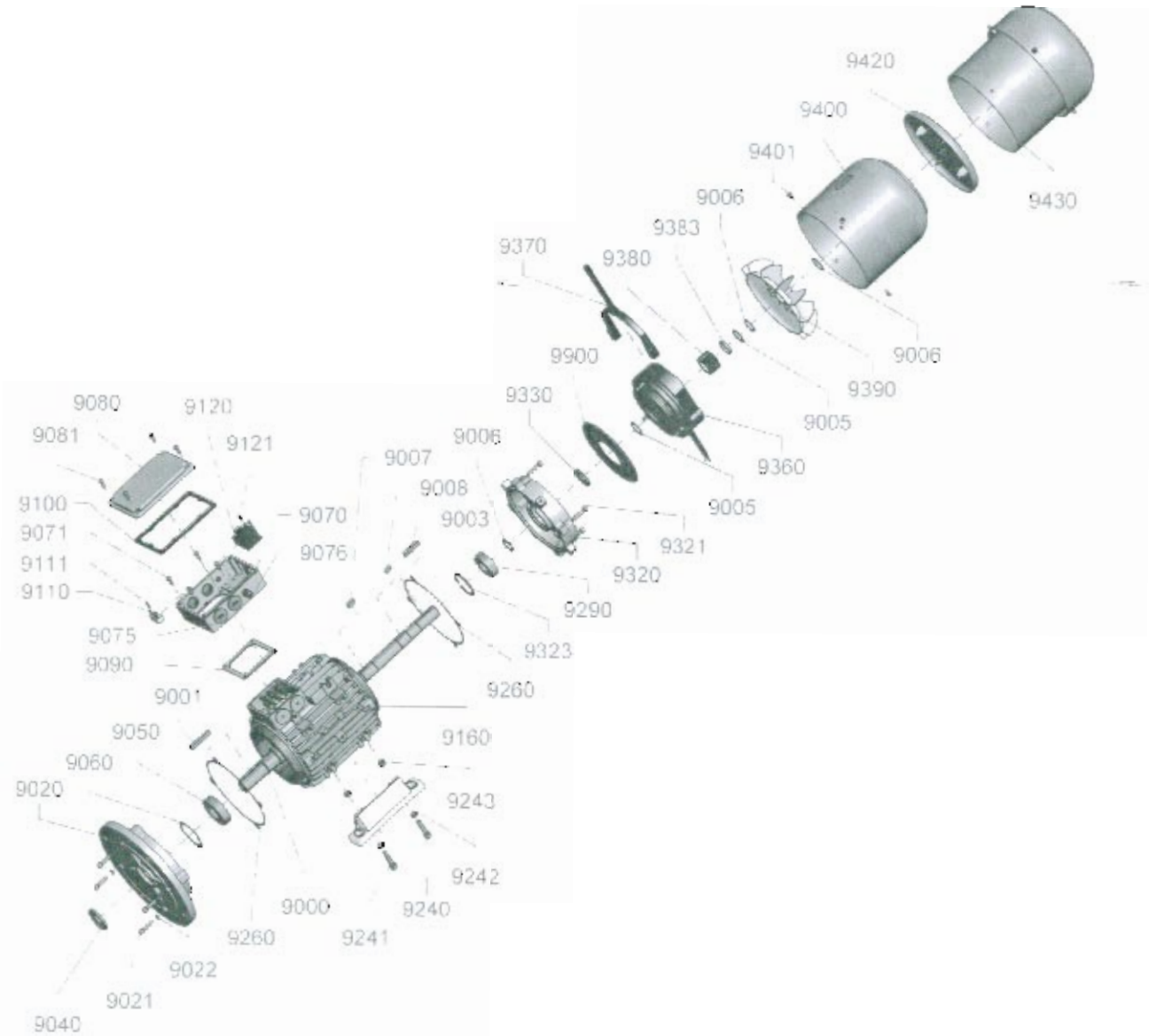

Motor nach Werknorm B5 Größe 63-180
Motor according to works standard B5, size 63-180
Moteur selon la spécification B5 à hauteur d'axe 63-180

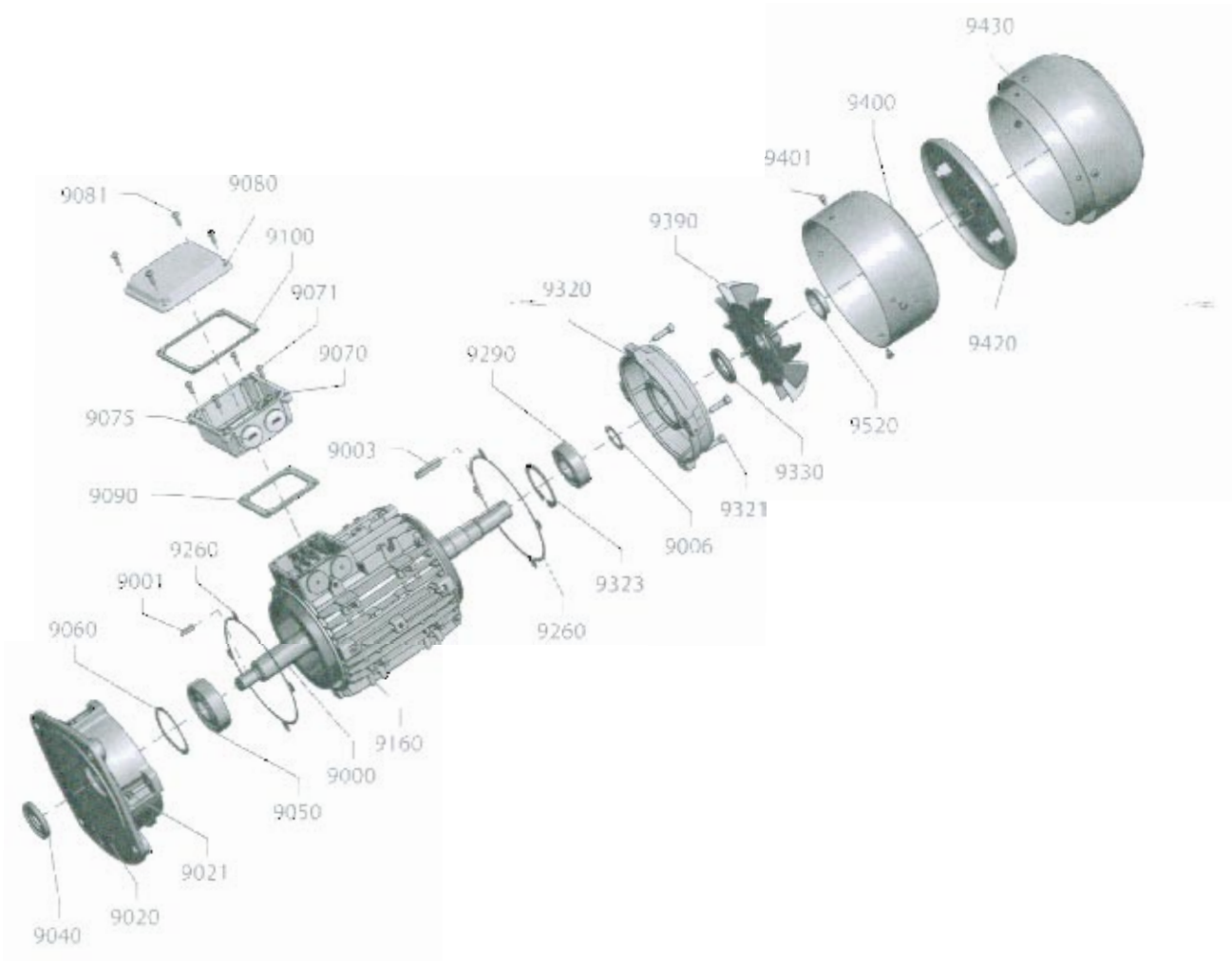

Bremsmotor nach Werknorm B5 Größe 63-180
Brake motor according to works standard B5, size 63-180
Moteur selon la spécification B5 à hauteur d'axe 63-180

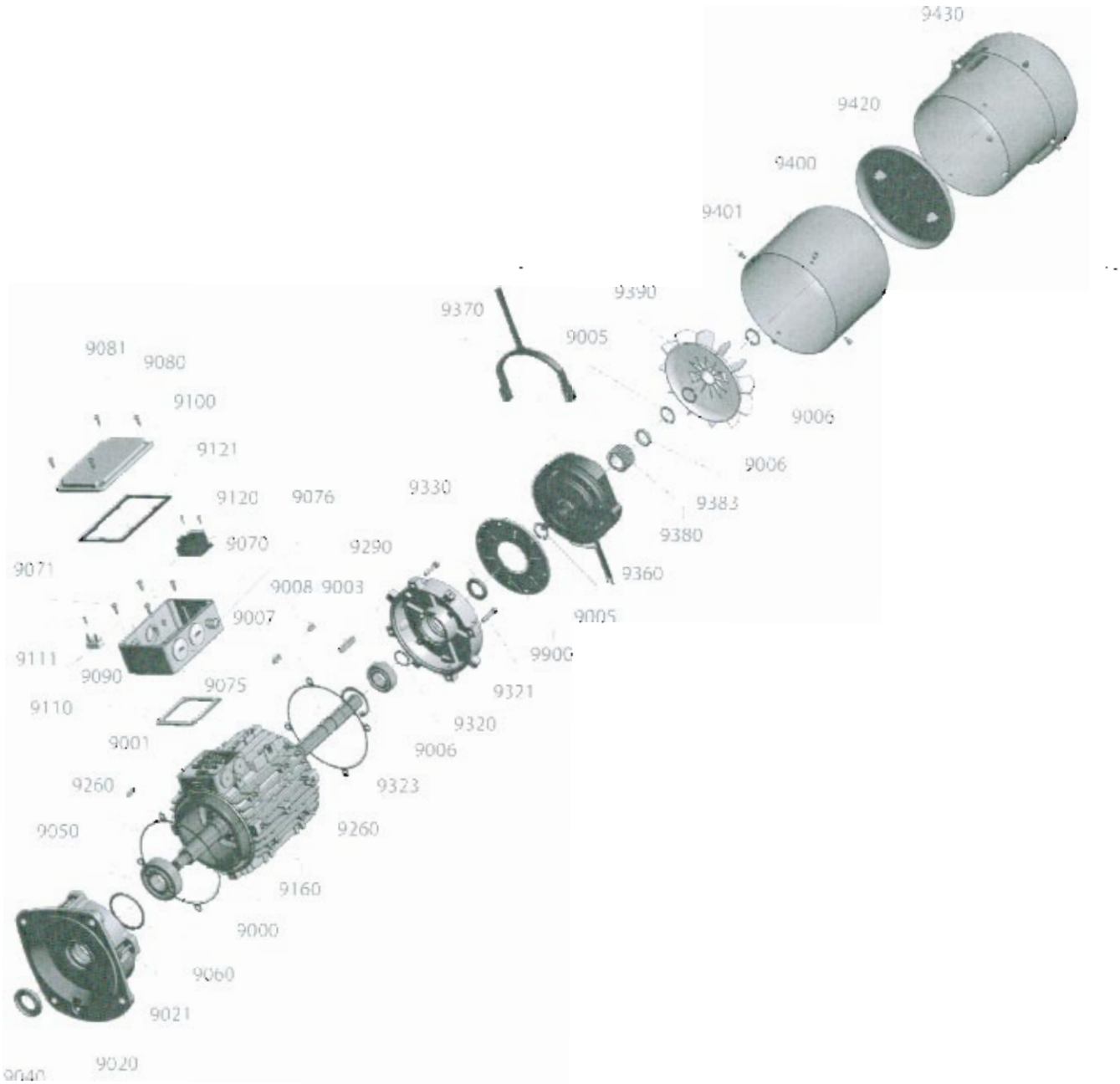

Motor nach Werknorm B14 Größe 63-160
Motor according to works standard B14, size 63-160
Moteur selon la spécification B14 à hauteur d'axe 63-160

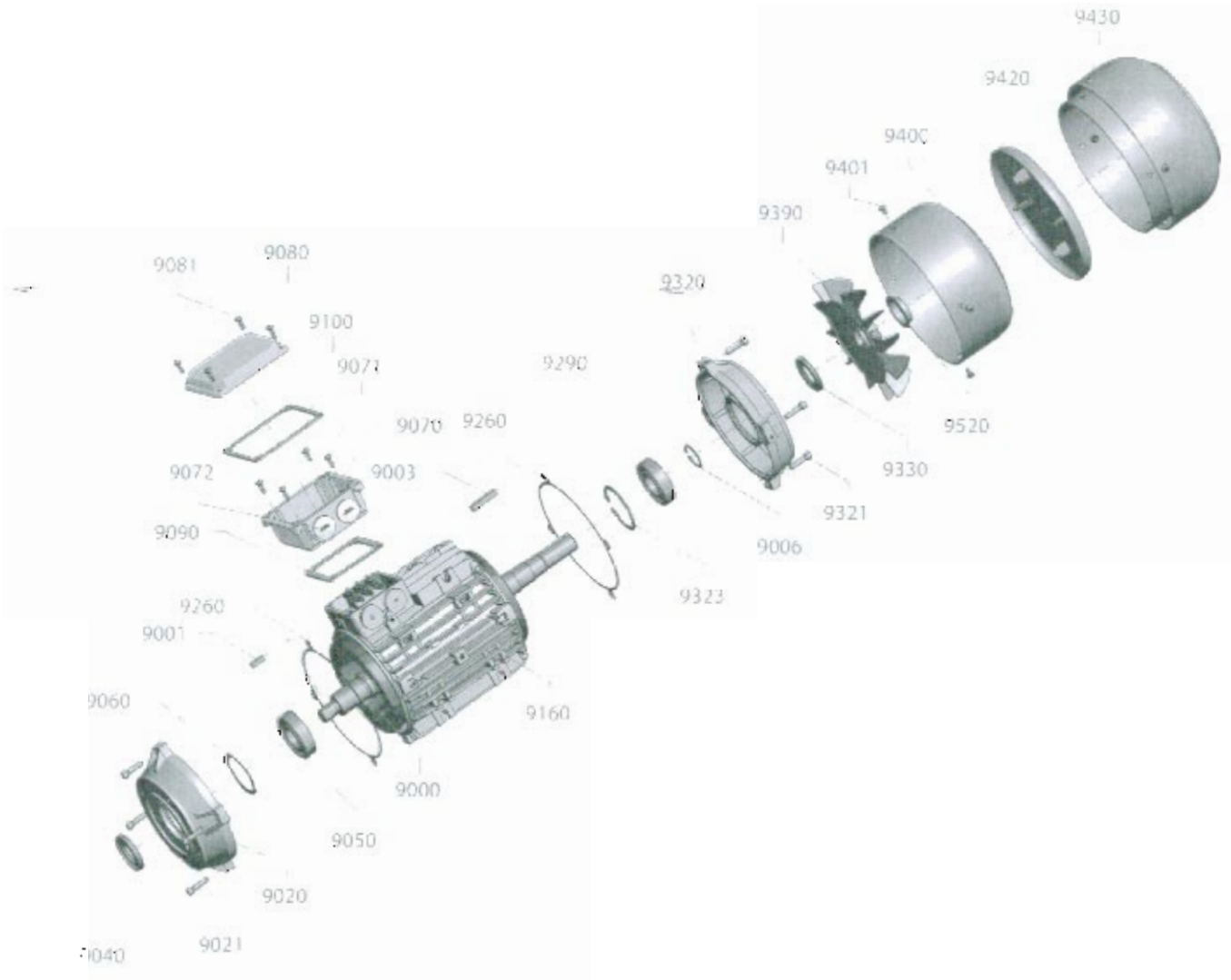

Bremsmotor nach Werknorm B14 Größe 63-160
Brake motor according to works standard B14, size 63-160
Moteur frein selon la spécification B14 à hauteur d'axe 63-160

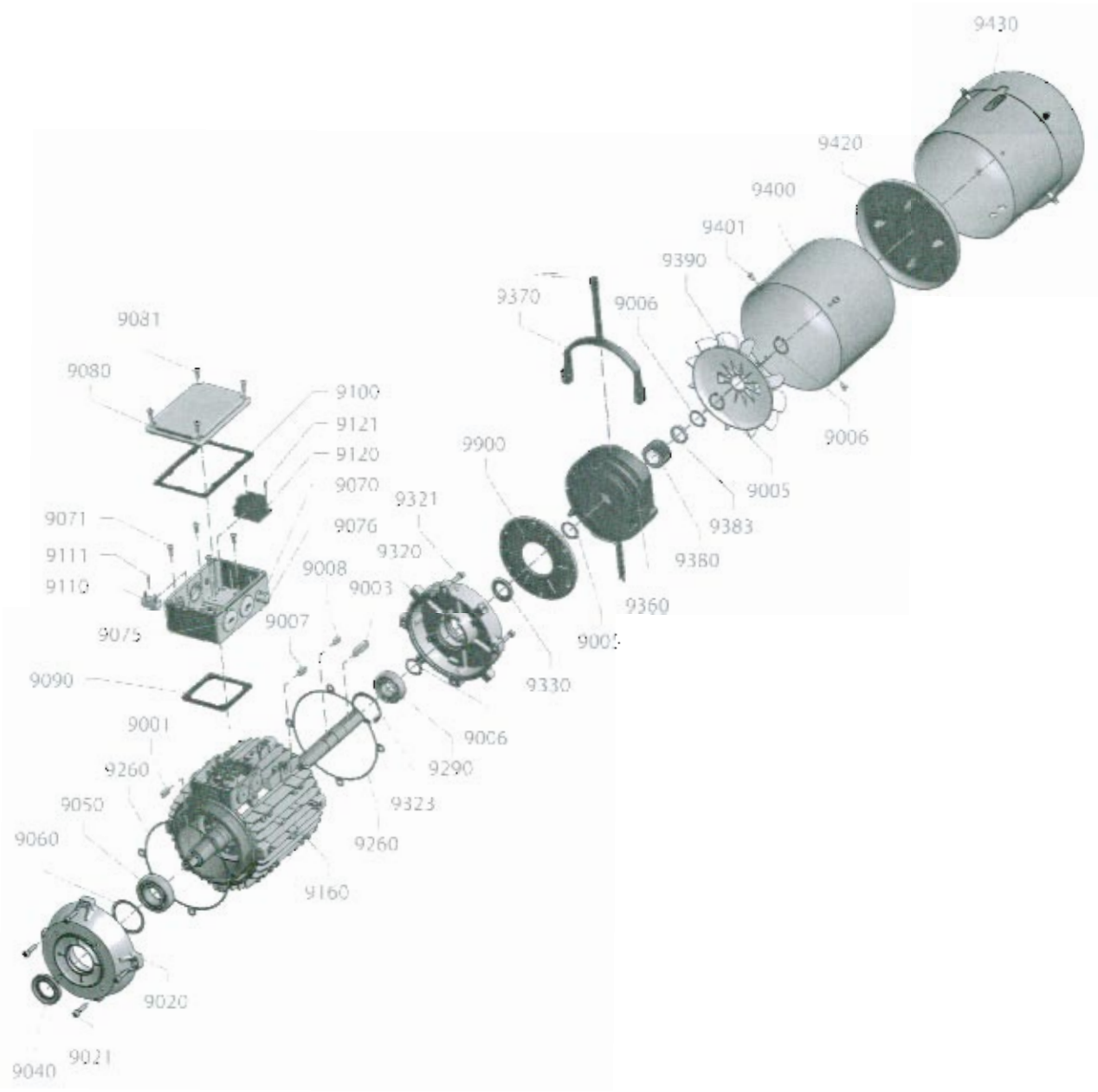

Bestellangaben
Order details
Informations de commande

Erläuterung des Typenschildes
Explanation of the rating plate
Explication de la plaque signalétique

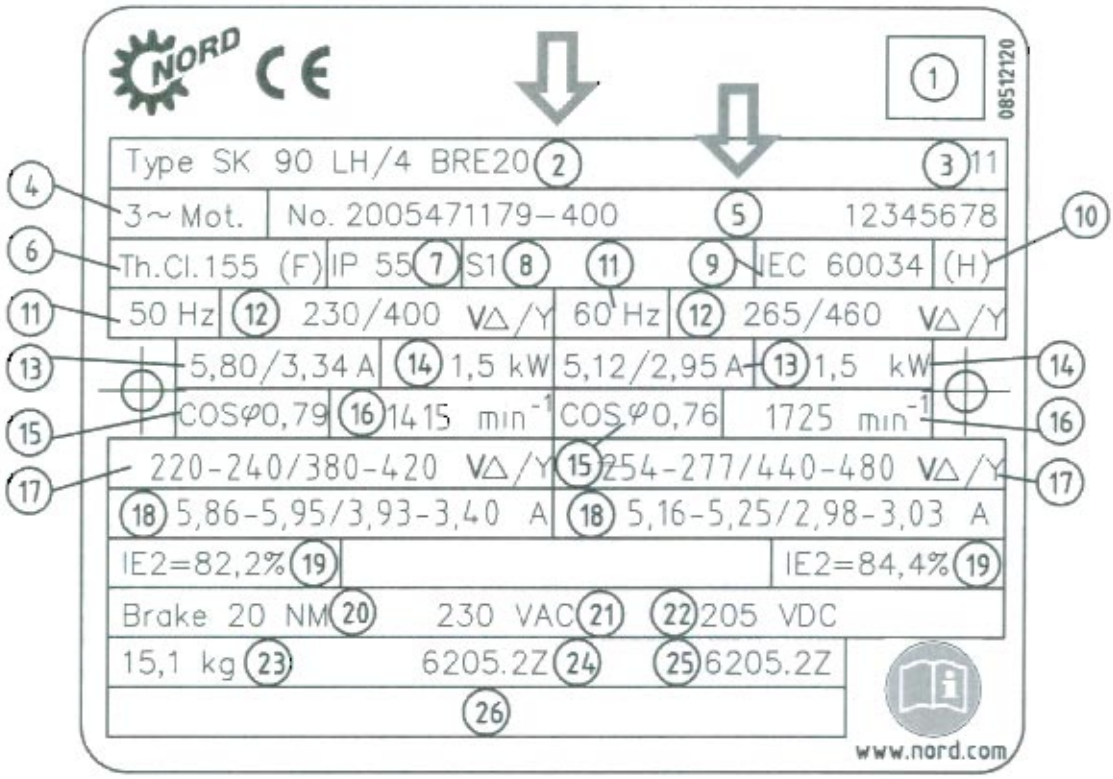

DE

1 Matrix – Barcode
2 NORD - Motortyp
3 Herstellungsjahr
4 Phasenzahl
5 Fabrikationsnummer
6 Wärmeklasse
7 Schutzart
8 Betriebsart
9 Norm
10 Halbkeilwuchtung

11 Frequenz
12 Motorspannung
13 Nennstrom
14 Nennleistung
15 Leistungfaktor
16 Nenndrehzahl
17 Motorspannung - Weitbereich
18 Nennstrom - Weitbereich
19 Wirkungsgrad
20 Bremsmoment
21 Anschlußspannung Bremse
22 Bremsenspannung
23 Gewicht
24 Lagerung A-Seite
25 Lagerung B-Seite
26 Kundenzeile

GB

1 Matrix – Barcode
2 NORD - Motor type
3 Year of manufacture
4 Number of phases
5 Serial number
6 Heat class
7 Protection class
8 Operating mode
9 Standard
10 Half key balancing

11 Frequency
12 Motor voltage
13 Nominal current
14 Nominal power
15 Power factor
16 Nominal speed
17 Motor voltage - wide range
18 Nominal current - wide range
19 Efficiency
20 Braking torque
21 Brake connection voltage
22 Braking voltage
23 Weight
24 A side bearing
25 B side bearing
26 Customer line

FR

1 Code matriciel, a barres
2 Type de moteur NORD
3 Année de fabrication
4 Nombre de phases
5 Numéro de série
6 Classe thermique
7 Type de protection
8 Type de fonctionnement
9 Norme
10 Équilibrage dynamique avec une demi-clavette
11 Fréquence
12 Tension du moteur
13 Intensité nominale
14 Puissance nominale
15 Facteur de puissance
16 Vitesse nominale
17 Tension du moteur – plage étendue
18 Intensité nominale - plage étendue
19 Rendement
20 Couple de freinage
21 Tension de raccordement du frein
22 Tension de freinage
23 Poids
24 Palier côté A
25 Palier côté B
26 Ligne réservée au client

NOTIZEN
NOTES
NOTES

NORD DRIVESYSTEMS GROUP

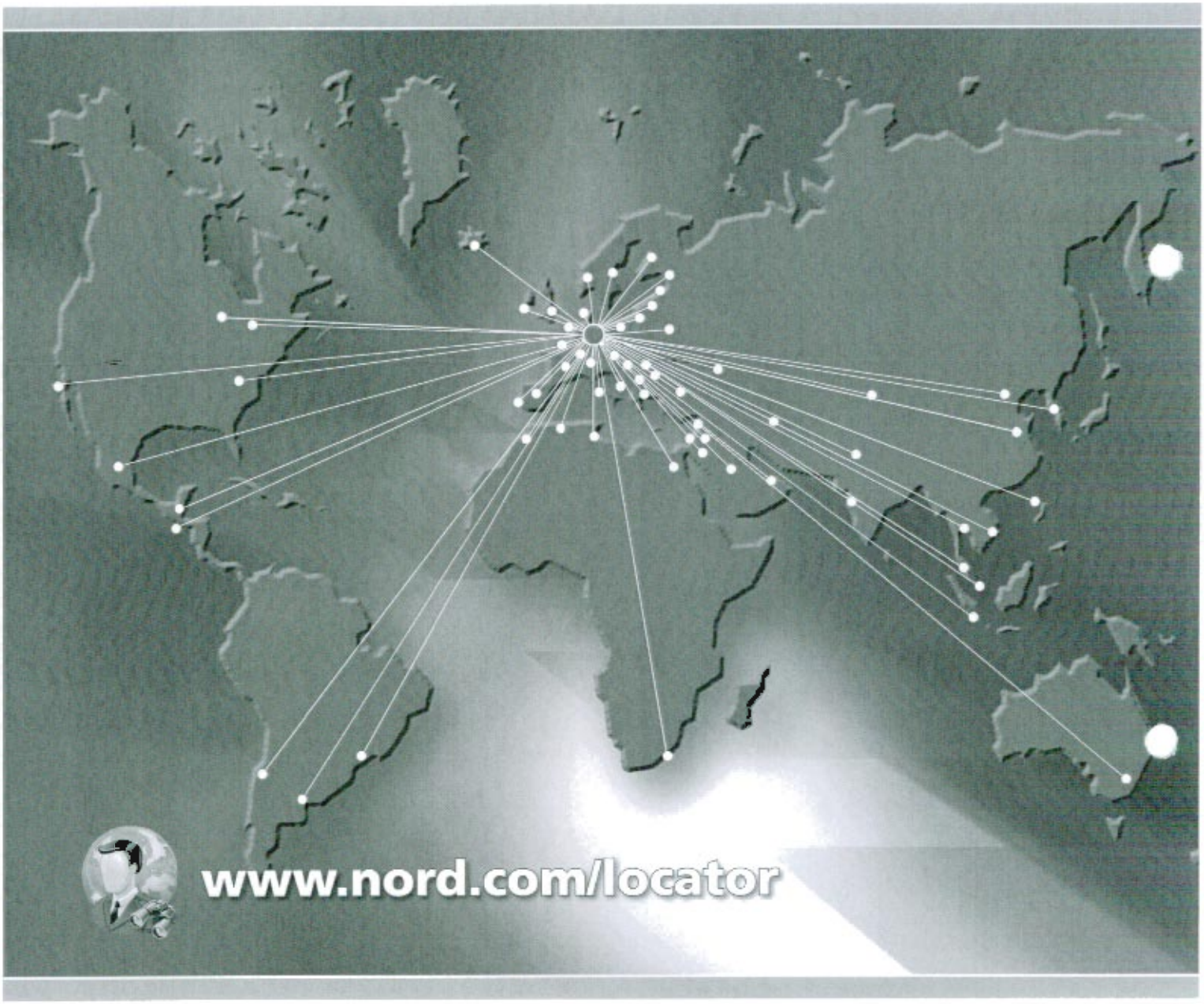

Headquarters:

Getriebebau NORD GmbH & Co. KG
Rudolf-Diesel-Straße 1
D · 22941 Bargteheide
Fon +49 (0) 4532 / 401 - 0
Fax +49 (0) 4532 / 401 - 253
info@nord.com
www.nord.com

NORD DRIVESYSTEMS

Mat.Nr: 6002599/2212

Intelligent Drivesystems, Worldwide Services

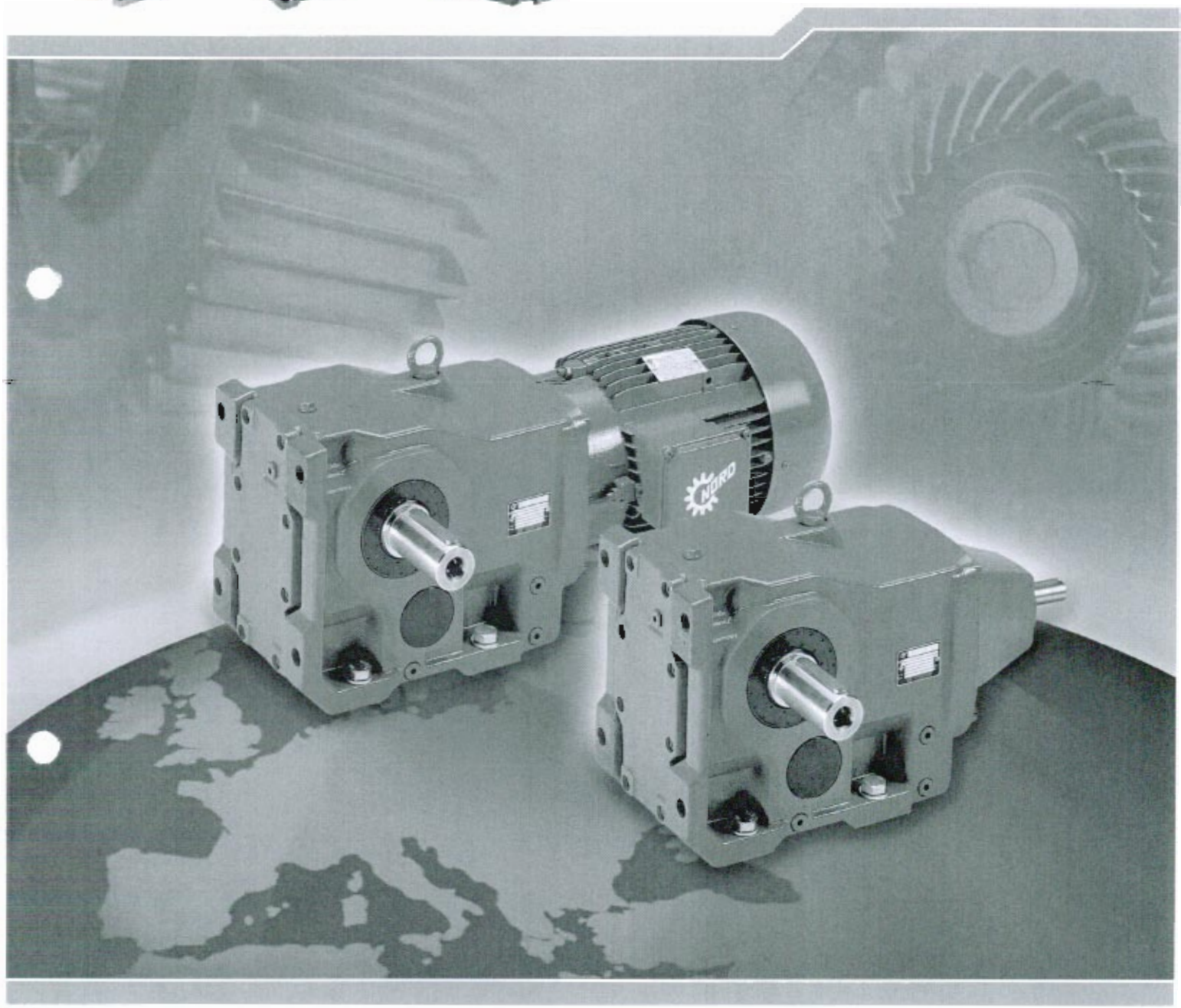

DE GB FR

PL1040

Ersatzteilkatalog Kegelradgetriebe
Spare parts catalogue Unicase Helical Bevel
Catalogue de pièces de rechange des réducteurs
à Couple Conique Monoe

NORD DRIVESYSTEMS

Inhaltsübersicht
Table Of Contents
Sommaire

Allgemeine Ersatzteile
General parts list
Vues éclatées et nomenclature

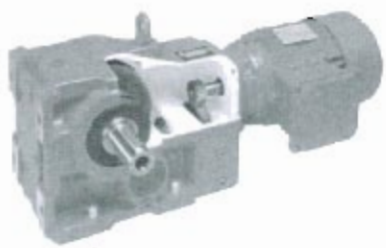

Kegelradgetriebe . . . . . 2 - 15
Helical-Bevel Gear Units
Réducteurs à couple conique

Bestellangaben . . . . . 16 - 17
Order details
Informations de commande

Kegelradgetriebe
Helical-Bevel Gear Unit
Réducteurs à couple conique

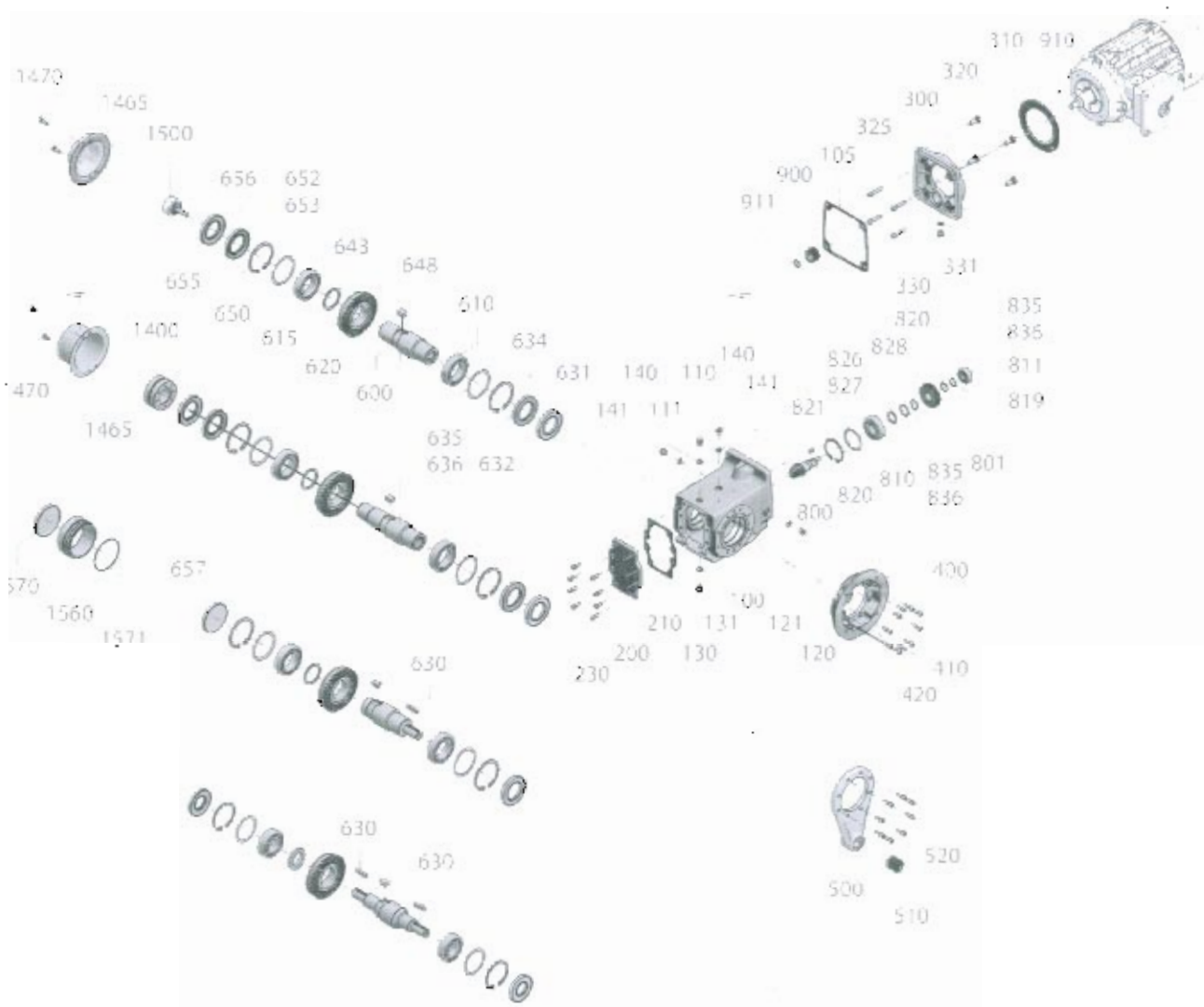

SK 92072 - SK 92772

DE

100 Gehäuse
105 Dichtung
110 Schraube
111 Dichtung
120 Schraube
121 Dichtung
130 Schraube
131 Dichtung
140 Schraube
141 Dichtung
200 Gehausedeckel
210 Dichtung
230 Schraube
300 Getriebedeckel
310 Dichtung
320 Schraube
325 Schraube
330 Schraube
331 Dichtung
400 Flansch
410 Schraube
420 Stift
500 Drehmomentenstütze
510 Schwingmetallbuchse
520 Schraube
600 Abtriebswelle
610 Walzlager
615 Walzlager
620 Abtriebsrad
630 Passfeder
631 Wellendichtring
632 Wellendichtring
634 Sicherungsring
635 Passscheibe
636 Passscheibe
643 Buchse
648 Passfeder
650 Sicherungsring
652 Passscheibe
653 Passscheibe
655 Wellendichtring
656 Wellendichtring
657 Verschlusskappe

↓

GB

100 Housing
105 Seal
110 Screw
111 Seal
120 Screw
121 Seal
130 Screw
131 Seal
140 Screw
141 Seal
200 Housing cover
210 Seal
230 Screw
300 Gear unit cover
310 Seal
320 Screw
325 Screw
330 Screw
331 Seal
400 Flange
410 Screw
420 Pins
500 Torque arm
510 Rubber bonded metal bush
520 Screw
600 Output shaft
610 Roller bearing
615 Roller bearing
620 Output gear
630 Key
631 Radial shaft seal
632 Radial shaft seal
634 Circlip
635 Shim
636 Shim
643 Socket
648 Key
650 Circlip
652 Shim
653 Shim
655 Radial shaft seal
656 Radial shaft seal
657 Sealing cap

↓

FR

100 Boîtier
105 Bague d'étanchéité
110 Vis
111 Bague d'étanchéité
120 Vis
121 Bague d'étanchéité
130 Vis
131 Bague d'étanchéité
140 Vis
141 Bague d'étanchéité
200 Couvercle du carter
210 Bague d'étancheité
230 Vis
300 Couvercle du réducteur
310 Bague d'étanchéite
320 Vis
325 Vis
330 Vis
331 Bague d'étanchéite
400 Brigde
410 Vis
420 Goupilles
500 Bras de réaction
510 Joint anti-vibratile
520 Vis
600 Arbre de sortie
610 Palier
615 Palier
620 Roue de sortie
630 Clavette
631 Bague d'étanchéité de l'arbre
632 Bague d'étanchéité de l'arbre
634 Circlip
635 Rondelles d'ajustage
636 Rondelles d'ajustage
643 Douille
648 Clavette
650 Circlip
652 Rondelle d'ajustage
653 Rondelle d'ajustage
655 Bague d'étanchéité de l'arbre
656 Bague d'étanchéite de l'arbre
657 Bouchon

↓

Kegelradgetriebe
Helical-Bevel Gear Unit
Réducteurs à couple conique

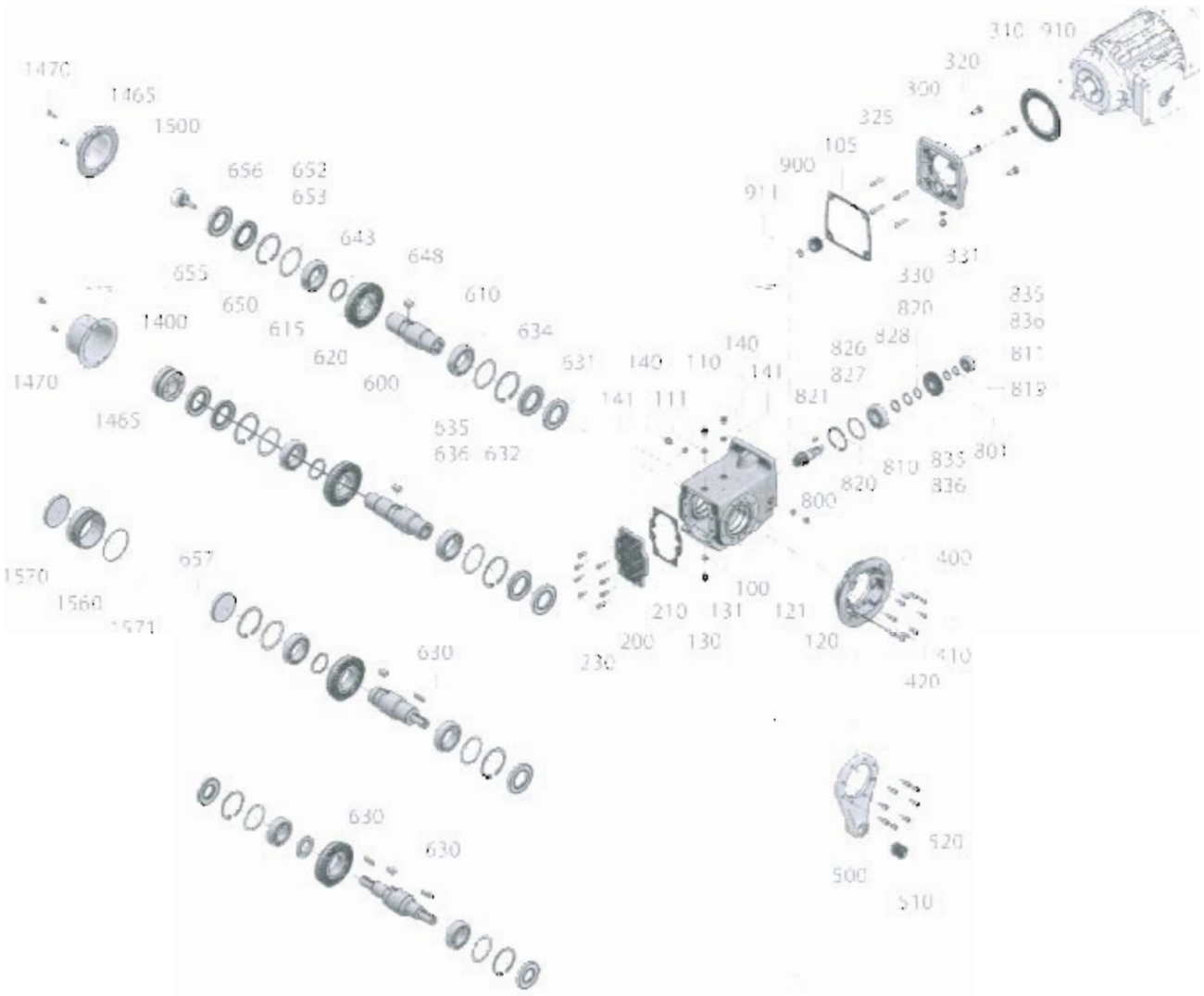

SK 92072 - SK 92772

↑

DE

800	Ritzelwelle
801	Antriebsrad
810	Walzlager
811	Walzlager
819	Sicherungsring
820	Sicherungsring
821	Passfeder
826	Passscheibe
827	Passscheibe
828	Stutzscheibe
835	Passscheibe
836	Passscheibe
900	Antriebsritzel
910	Passfeder
911	Sicherungsring
1400	Baugruppe Schrumpfscheibe
1465	Haube
1470	Schraube
1500	Befestigungselement
1560	Buchse
1570	Verschlusskappe
1571	O-Ring

↑

GB

800	Pinion shaft
801	Drive gear
810	Roller bearing
811	Roller bearing
819	Circlip
820	Circlip
821	Key
826	Shim
827	Shim
828	Supporting disc
835	Shim
836	Shim
900	Driving pinion
910	Key
911	Circlip
1400	Shrink disc assembly
1465	Cover
1470	Screw
1500	Fixing element
1560	Socket
1570	Sealing cap
1571	O-ring

↑

FR

800	Arbre de pignon
801	Roue d'entrée
810	Palier
811	Palier
819	Circlip
820	Circlip
821	Clavette
826	Rondelle d'ajustage
827	Rondelle d'ajustage
828	Rondelle d'appui
835	Rondelle d'ajustage
836	Rondelle d'ajustage
900	Pignon d'entrée
910	Clavette
911	Circlip
1400	Module de frette de serrage
1465	Capot
1470	Vis
1500	Elément de fixation
1560	Douille
1570	Bouchon
1571	Joint torique

Kegelradgetriebe
Helical-Bevel Gear Unit
Réducteurs à couple conique

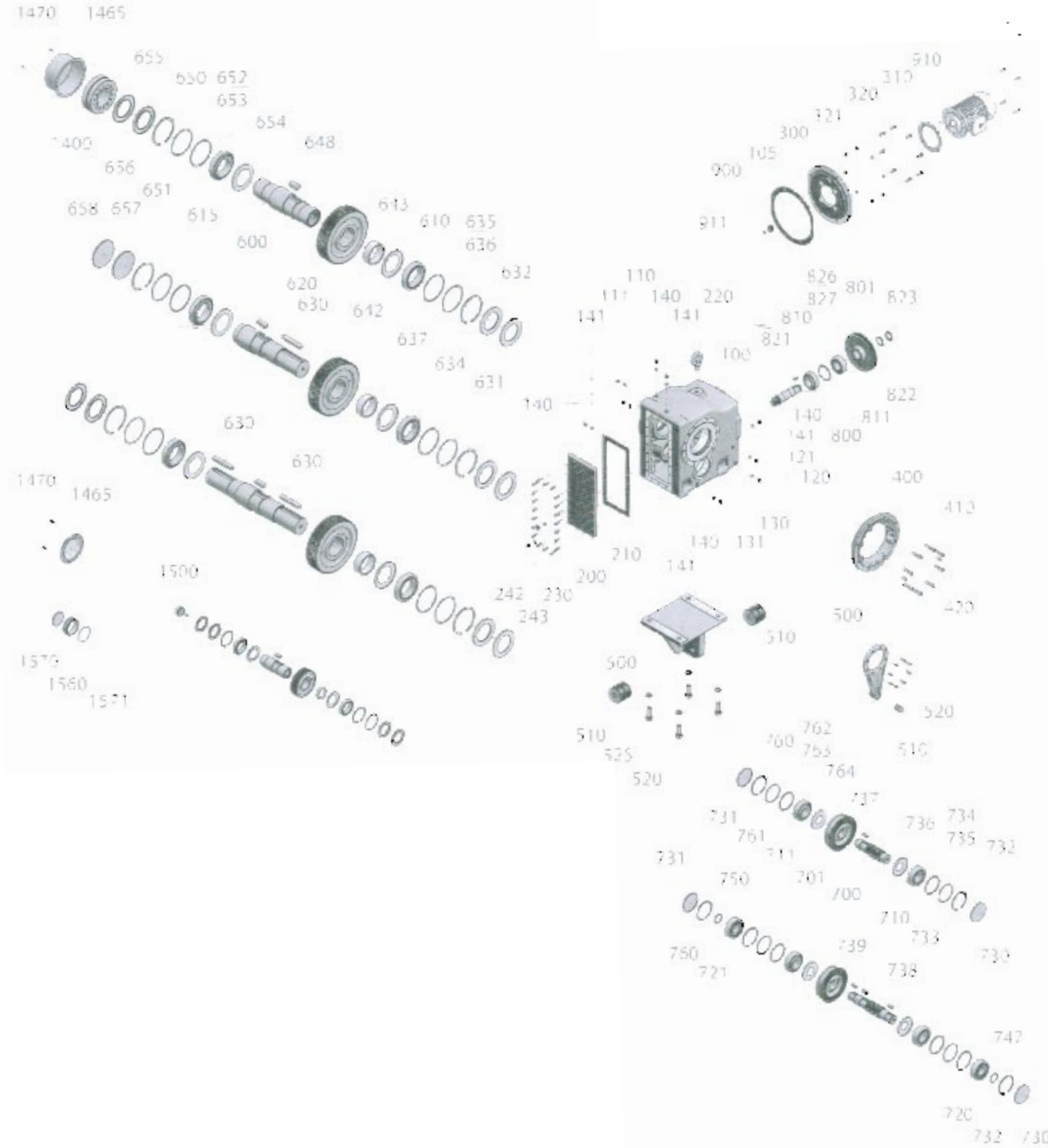

SK 9012.1 - SK 9096.1

DE

100 Gehäuse
105 Dichtung
110 Schraube
111 Dichtung
120 Schraube
121 Dichtung
130 Schraube
131 Dichtung
140 Schraube
141 Dichtung
200 Gehäusedeckel
210 Dichtung
220 Schraube
230 Schraube
242 Schraube
243 Dichtung
300 Getriebedeckel
310 Dichtung
320 Schraube
321 Federring
325 Schraube
400 Flansch
410 Schraube
420 Stift
500 Drehmomentenstütze
510 Schwingmetallbuchse
520 Schraube
600 Abtriebswelle
610 Wälzlager
615 Wälzlager
620 Abtriebsrad
630 Passfeder
631 Wellendichtring
632 Wellendichtring
634 Sicherungsring
635 Passscheibe
636 Passscheibe
637 Stützscheibe
642 Nilosring
643 Buchse
648 Passfeder
650 Sicherungsring
651 Stützscheibe
652 Passscheibe
653 Passscheibe
654 Nilosring
655 Wellendichtring
656 Wellendichtring
657 Verschlusskappe
658 Verschlusskappe
↓

GB

100 Housing
105 Seal
110 Screw
111 Seal
120 Screw
121 Seal
130 Screw
131 Seal
140 Screw
141 Seal
200 Housing cover
210 Seal
220 Screw
230 Screw
242 Screw
243 Seal
300 Gear unit cover
310 Seal
320 Screw
321 Lock washer
325 Screw
400 Flange
410 Screw
420 Pins
500 Torque arm
510 Rubber bonded metal bush
520 Screw
600 Output shaft
610 Roller bearing
615 Roller bearing
620 Output gear
630 Key
631 Radial shaft seal
632 Radial shaft seal
634 Circlip
635 Shim
636 Shim
637 Supporting disc
642 Nilos ring
643 Socket
648 Key
650 Circlip
651 Supporting disc
652 Shim
653 Shim
654 Nilos ring
655 Radial shaft seal
656 Radial shaft seal
657 Sealing cap
658 Sealing cap
↓

FR

100 Boîtier
105 Bague d'étanchéité
110 Vis
111 Bague d'étanchéité
120 Vis
121 Bague d'étanchéité
130 Vis
131 Bague d'étanchéité
140 Vis
141 Bague d'étanchéité
200 couvercle du carter
210 Bague d'étanchéité
220 Vis
230 Vis
242 Vis
243 Bague d'étanchéité
300 Couvercle du réducteur
310 Bague d'étanchéité
320 Vis
321 Rondelle élastique
325 Vis
400 Brigde
410 Vis
420 Goupilles
500 Bras de réaction
510 Joint anti-vibratile
520 Vis
600 Arbre de sortie
610 Palier
615 Palier
620 Roue de sortie
630 Clavette
631 Bague d'étanchéite de l'arbre
632 Bague d'étanchéite de l'arbre
634 Circlip
635 Rondelles d'ajustage
636 Rondelles d'ajustage
637 Rondelle d'appui
642 Anneau Nilos
643 Douille
648 Clavette
650 Circlip
651 Rondelle d'appui
652 Rondelle d'ajustage
653 Rondelle d'ajustage
654 Anneau Nilos
655 Bague d'étanchéité de l'arbre
656 Bague d'étanchéité de l'arbre
657 Bouchon
658 Bouchon
↓

Kegelradgetriebe
Helical-Bevel Gear Unit
Réducteurs à couple conique

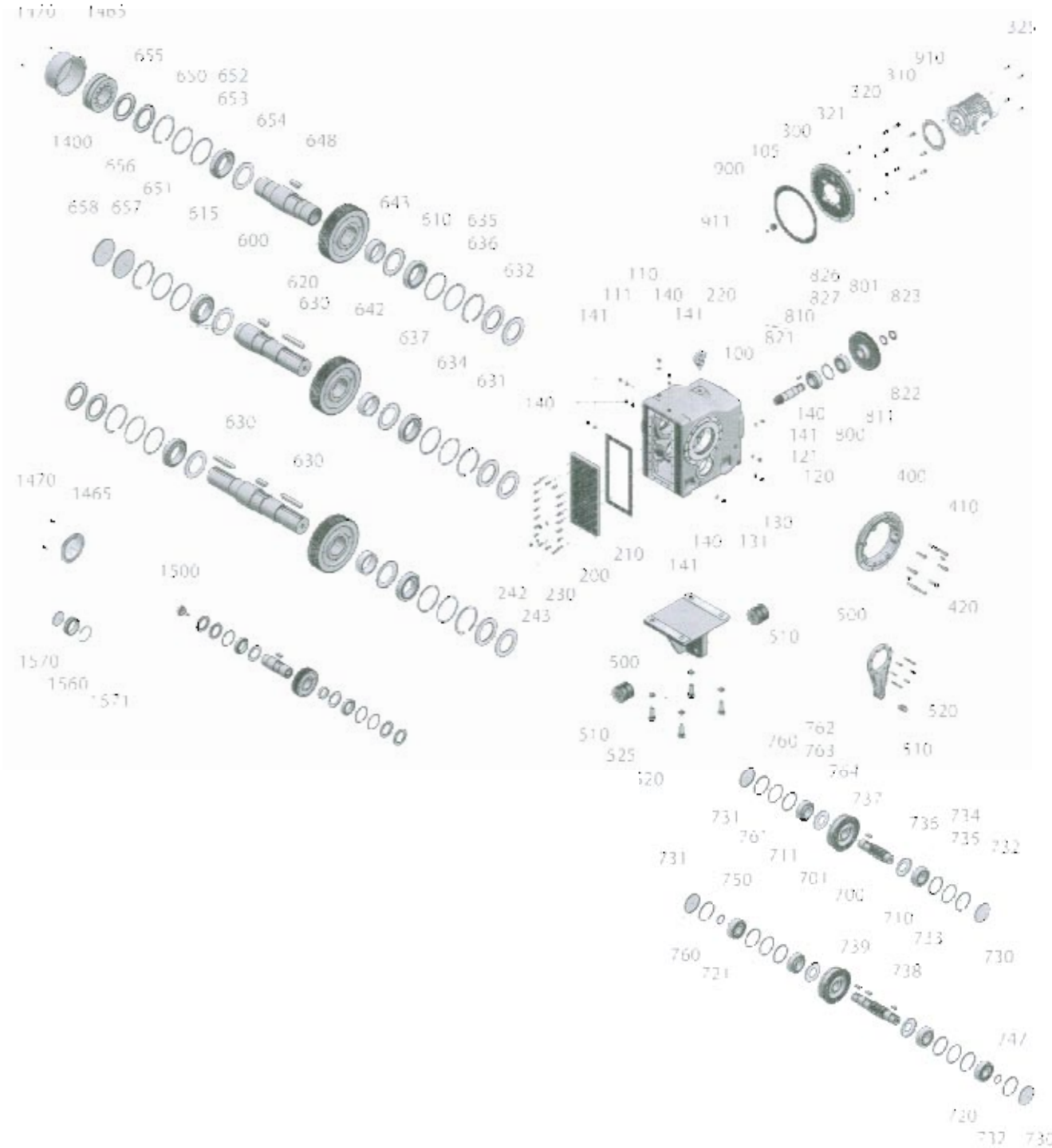

SK 9012.1 - SK 9096.1

↑

DE

700 Ritzelwelle
701 Antriebsrad
710 Wälzlager
711 Wälzlager
720 Rücklaufsperre
721 Rücklaufsperre
730 Verschlusskappe
731 Verschlusskappe
732 Sicherungsring
733 Stützscheibe
734 Passscheibe
735 Passscheibe
736 Nilosring
737 Passfeder
738 Passfeder
739 Passfeder
747 Sicherungsring
750 Sicherungsring
760 Sicherungsring
761 Stützscheibe
762 Passscheibe
763 Passscheibe
764 Nilosring
800 Ritzelwelle
801 Antriebsrad
810 Wälzlager
811 Wälzlager
821 Passfeder
822 Nutmutter
823 Sicherungsblech
826 Passscheibe
827 Passscheibe
900 Antriebsritzel
910 Passfeder
911 Sicherungsring
1400 Baugruppe Schrumpfscheibe
1465 Haube
1470 Schraube
1500 Befestigungselement
1560 Buchse
1570 Verschlusskappe
1571 O-Ring

↑

GB

700 Pinion shaft
701 Drive gear
710 Roller bearing
711 Roller bearing
720 Backstop
721 Backstop
730 Sealing cap
731 Sealing cap
732 Circlip
733 Supporting disc
734 Shim
735 Shim
736 Nilos ring
737 Key
738 Key
739 Key
747 Circlip
750 Circlip
760 Circlip
761 Supporting disc
762 Shim
763 Shim
764 Nilos ring
800 Pinion shaft
801 Drive gear
810 Roller bearing
811 Roller bearing
821 Key
822 Locknut
823 Tab washer
826 Shim
827 Shim
900 Driving pinion
910 Key
911 Circlip
1400 Shrink disc assembly
1465 Cover
1470 Screw
1500 Fixing element
1560 Socket
1570 Sealing cap
1571 O-ring

↑

FR

700 Arbre intermédiare
701 Roue d'entrée
710 Palier
711 Palier
720 Antidévireur
721 Antidévireur
730 Bouchon
731 Bouchon
732 Circlip
733 Rondelle d'appui
734 Rondelle d'ajustage
735 Rondelle d'ajustage
736 Anneau Nilos
737 Clavette
738 Clavette
739 Clavette
747 Circlip
750 Circlip
760 Circlip
761 Rondelle d'appui
762 Rondelle d'ajustage
763 Rondelle d'ajustage
764 Anneau Nilos
800 Arbre de pignon
801 Roue d'entrée
810 Palier
811 Palier
821 Clavette
822 Ecrou à encoches
823 Rondelle d'arrêt
826 Rondelle d'ajustage
827 Rondelle d'ajustage
900 Pignon d'entrée
910 Clavette
911 Circlip
1400 Module de frette de serrage
1465 Capot
1470 Vis
1500 Elément de fixation
1560 Douille
1570 Bouchon
1571 Joint torique

SK 9072.1/32 - SK 9092.1/52

Doppelgetriebe für Kegelradgetriebe
Double Gear Unit for Helical-Bevel Gear Unit
Réducteur double pour couple conique

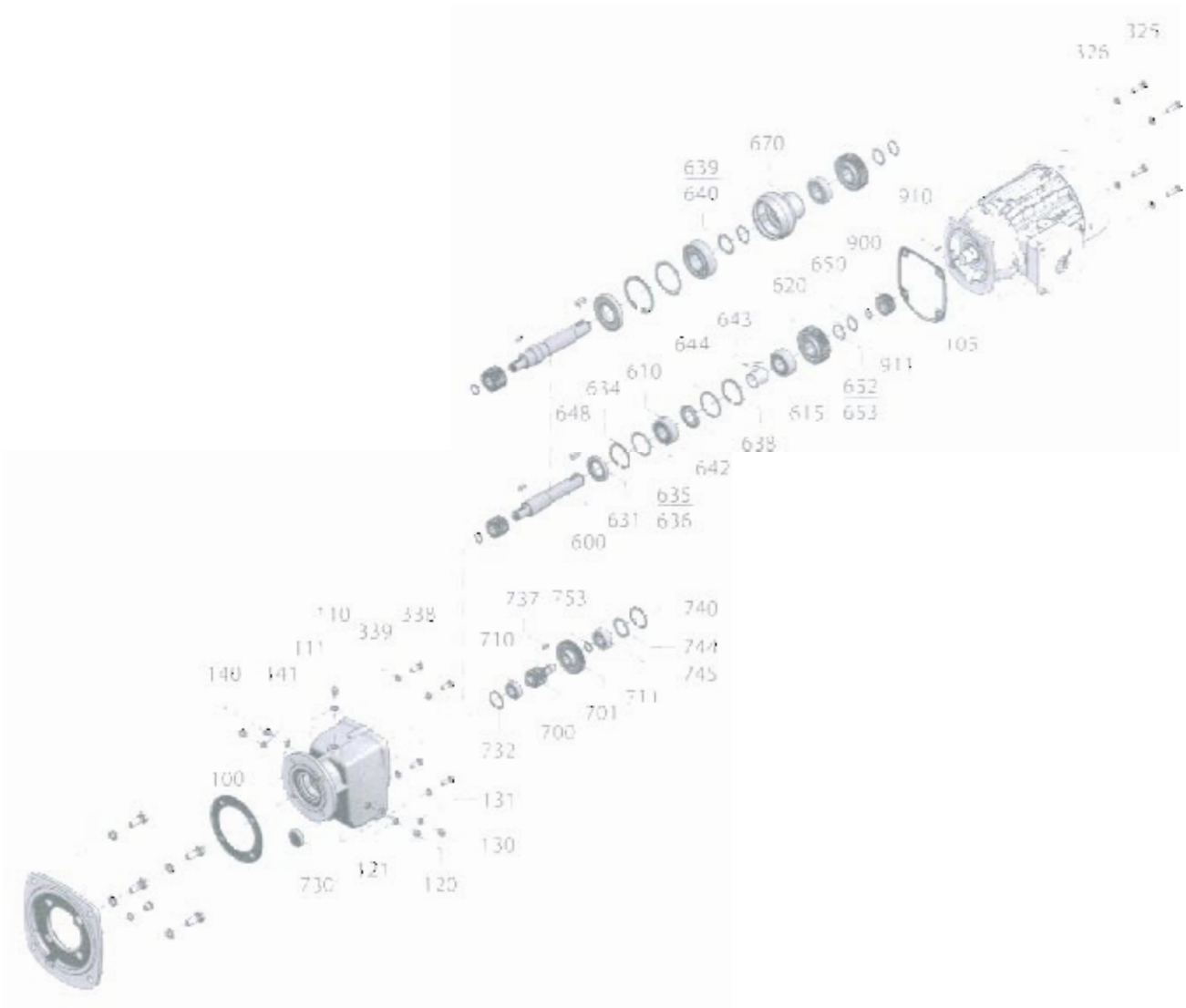

SK 9072.1/32 - SK 9092.1/52

DE

100 Gehäuse
105 Dichtung
110 Schraube
111 Dichtung
120 Schraube
121 Dichtung
130 Schraube
131 Dichtung
140 Schraube
141 Dichtung
325 Schraube
326 Federring
338 Schraube
339 Federring
600 Abtriebswelle
610 Walzlager
615 Walzlager
620 Abtriebsrad
631 Wellendichtring
634 Sicherungsring
635 Passscheibe
636 Passscheibe
638 Sicherungsring
639 Passscheibe
640 Passscheibe
642 Nilosring
643 Buchse
644 Buchse
648 Passfeder
650 Sicherungsring
652 Passscheibe
653 Passscheibe
670 Lagerbuchse
700 Ritzelwelle
701 Antriebsrad
710 Walzlager
711 Walzlager
730 Verschlusskappe
732 Sicherungsring
737 Passfeder
740 Sicherungsring
744 Passscheibe
745 Passscheibe
753 Buchse
900 Antriebsritzel
910 Passfeder
911 Sicherungsring

GB

100 Housing
105 Seal
110 Screw
111 Seal
120 Screw
121 Seal
130 Screw
131 Seal
140 Screw
141 Seal
325 Screw
326 Lock washer
338 Screw
339 Lock washer
600 Output shaft
610 Roller bearing
615 Roller bearing
620 Output gear
631 Radial shaft seal
634 Circlip
635 Shim
636 Shim
638 Circlip
639 Shim
640 Shim
642 Nilos ring
643 Socket
644 Washer
648 Key
650 Circlip
652 Shim
653 Shim
670 Roller bearing bush
700 Pinion shaft
701 Drive gear
710 Roller bearing
711 Roller bearing
730 Sealing cap
732 Circlip
737 Key
740 Circlip
744 Shim
745 Shim
753 Socket
900 Driving pinion
910 Key
911 Circlip

FR

100 Boîtier
105 Bague d'étanchéité
110 Vis
111 Bague d'étanchéité
120 Vis
121 Bague d'étanchéité
130 Vis
131 Bague d'étanchéite
140 Vis
141 Bague d'étanchéité
325 Vis
326 Rondelle élastique
338 Vis
339 Rondelle élastique
600 Arbre de sortie
610 Palier
615 Palier
620 Roue de sortie
631 Bague d'étanchéité de l'arbre
634 Circlip
635 Rondelle d'ajustage
636 Rondelle d'ajustage
638 Circlip
639 Rondelle d'ajustage
640 Rondelle d'ajustage
642 Anneau Nilos
643 Douille
644 Rondelle
648 Clavette
650 Circlip
652 Rondelle d'ajustage
653 Rondelle d'ajustage
670 Douille de palier
700 Arbre de pignon
701 Roue d'entrée
710 Palier
711 Palier
730 Bouchon
732 Circlip
737 Clavette
740 Circlip
744 Rondelle d'ajustage
745 Rondelle d'ajustage
753 Douille
900 Pignon d'entrée
910 Clavette
911 Circlip

SK 9096.1/62
SK 9096.1/63

Doppelgetriebe für Kegelradgetriebe
Double Gear Unit for Helical-Bevel Gear Unit
Réducteur double pour couple conique

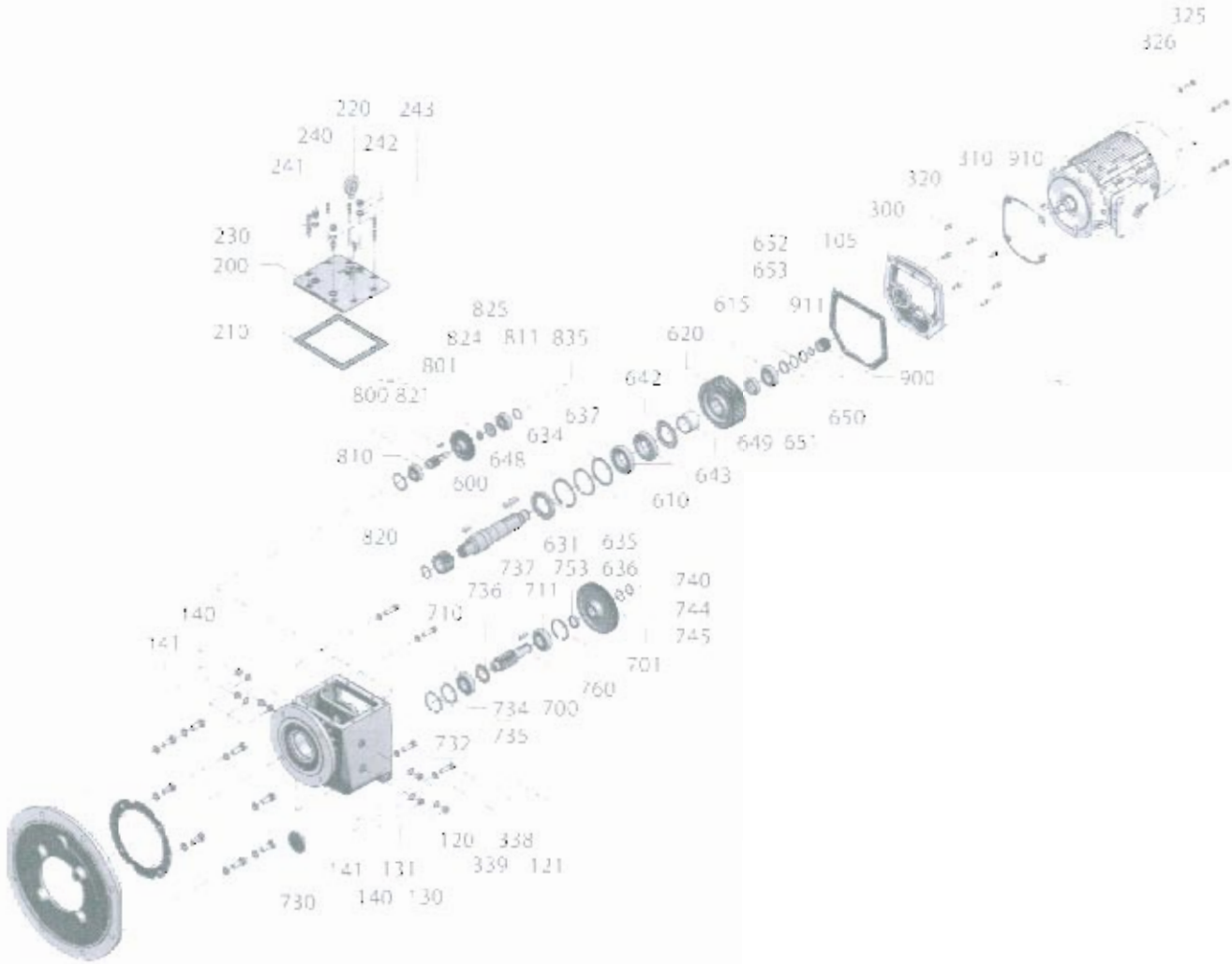

SK 9096.1/62
SK 9096.1/63

DE

100 Gehäuse
105 Dichtung
120 Schraube
121 Dichtung
130 Schraube
131 Dichtung
140 Schraube
141 Dichtung
200 Gehäusedeckel
210 Dichtung
220 Schraube
230 Schraube
240 Schraube
241 Dichtung
242 Schraube
243 Dichtung
300 Getriebedeckel
310 Dichtung
320 Schraube
325 Schraube
326 Federring
338 Schraube
339 Federring
600 Abtriebswelle
610 Wälzlager
615 Wälzlager
620 Abtriebsrad
631 Wellendichtring
634 Sicherungsring
635 Passscheibe
636 Passscheibe
637 Stützscheibe
642 Nilosring
643 Buchse
644 Buchse
648 Passfeder
649 Buchse
650 Sicherungsring
651 Stützscheibe
652 Passscheibe
653 Passscheibe
700 Ritzelwelle
701 Antriebsrad
710 Wälzlager
711 Wälzlager
730 Verschlusskappe
732 Sicherungsring
734 Passscheibe
735 Passscheibe
736 Nilosring
737 Passfeder
740 Sicherungsring
744 Passscheibe
745 Passscheibe
753 Buchse
760 Sicherungsring
800 Ritzelwelle
801 Antriebsrad
810 Wälzlager
811 Wälzlager
821 Passfeder
824 Buchse
825 Nilosring
835 Passscheibe
900 Antriebsritzel
910 Passfeder
911 Sicherungsring

GB

100 Housing
105 Seal
120 Screw
121 Seal
130 Screw
131 Seal
140 Screw
141 Seal
200 Housing cover
210 Seal
220 Screw
230 Screw
240 Screw
241 Seal
242 Screw
243 Seal
300 Gear unit cover
310 Seal
320 Screw
325 Screw
326 Lock washer
338 Screw
339 Lock washer
600 Output shaft
610 Roller bearing
615 Roller bearing
620 Output gear
631 Radial shaft seal
634 Circlip
635 Shim
636 Shim
637 Supporting disc
642 Nilos ring
643 Socket
644 Washer
648 Key
649 Socket
650 Circlip
651 Supporting disc
652 Shim
653 Shim
700 Pinion shaft
701 Drive gear
710 Roller bearing
711 Roller bearing
730 Sealing cap
732 Circlip
734 Shim
735 Shim
736 Nilos ring
737 Key
740 Circlip
744 Shim
745 Shim
753 Socket
760 Circlip
800 Pinion shaft
801 Drive gear
810 Roller bearing
811 Roller bearing
821 Key
824 Socket
825 Nilos ring
835 Shim
900 Driving pinion
910 Key
911 Circlip

FR

100 Boîtier
105 Bague d'étanchéité
120 Vis
121 Bague d'étanchéité
130 Vis
131 Bague d'étanchéité
140 Vis
141 Bague d'étanchéité
200 couvercle du carter
210 Bague d'étanchéité
220 Vis
230 Vis
240 Vis
241 Bague d'étanchéité
242 Vis
243 Bague d'étanchéité
300 Couvercle du réducteur
310 Bague d'étanchéité
320 Vis
325 Vis
326 Rondelle élastique
338 Vis
339 Rondelle élastique
600 Arbre de sortie
610 Palier
615 Palier
620 Roue de sortie
631 Bague d'étanchéite de l'arbre
634 Circlip
635 Rondelle d'ajustage
636 Rondelle d'ajustage
637 Rondelle d'appui
642 Anneau Nilos
643 Douille
644 Rondelle
648 Clavette
649 Douille
650 Circlip
651 Rondelle d'appui
652 Rondelle d'ajustage
653 Rondelle d'ajustage
700 Arbre de pignon
701 Roue d'entrée
710 Palier
711 Palier
730 Bouchon
732 Circlip
734 Rondelle d'ajustage
735 Rondelle d'ajustage
736 Anneau Nilos
737 Clavette
740 Circlip
744 Rondelle d'ajustage
745 Rondelle d'ajustage
753 Douille
760 Circlip
800 Arbre de pignon
801 Roue d'entrée
810 Palier
811 Palier
821 Clavette
824 Douille
825 Bague Nilos
835 Rondelle d'ajustage
900 Pignon d'entrée
910 Clavette
911 Circlip

SK 9013.1 - SK 9053.1

Anbaugehäuse für Kegelradgetriebe
Add-on housing for Helical-Bevel Gear Unit
Boîtier troisième train pour réducteurs à couple conique

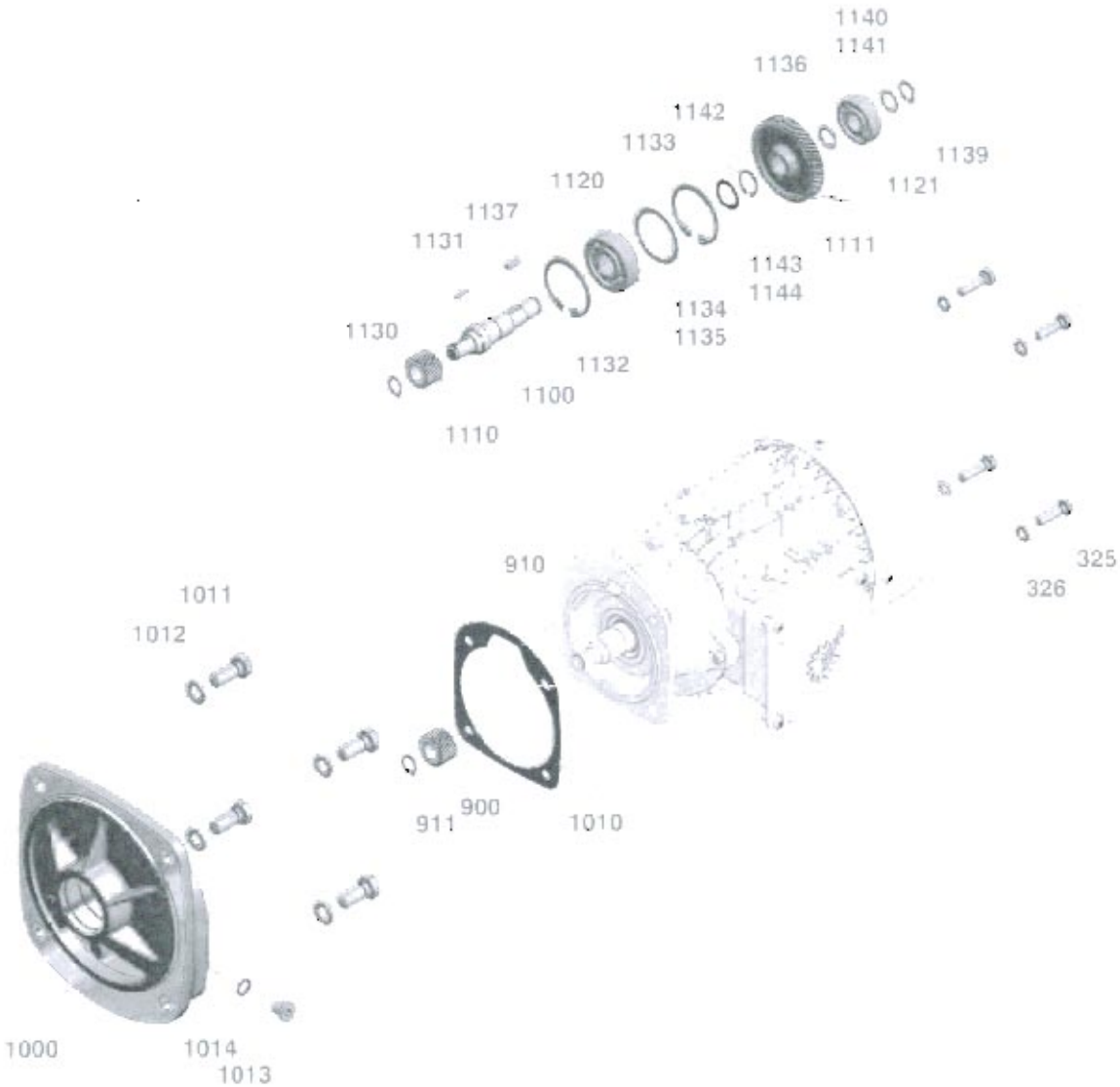

SK 9013.1 - SK 9053.1

DE		GB		FR	
325	Schraube	325	Screw	325	Vis
326	Federring	326	Lock washer	326	Rondelle élastique
900	Antriebsritzel	900	Drive gear	900	Pignon d'entrée
901	Schneckenwelle	901	Worm shaft	901	Arbre à vis
910	Passfeder	910	Key	910	Clavette
911	Sicherungsring	911	Circlip	911	Circlip
1000	Anbaugehäuse	1000	Add-on housing	1000	Boîtier
1010	Motordichtung	1010	Gasket	1010	Joint moteur
1011	Schraube	1011	Screw	1011	Vis
1012	Federring	1012	Lock washer	1012	Rondelle élastique
1013	Schraube	1013	Screw plug	1013	Vis
1014	Dichtring	1014	Seal	1014	Bague d'étanchéité
1100	Zwischenwelle	1100	Intermediate shaft	1100	Arbre de pignon
1110	Antriebsritzel	1110	Driving pinion	1110	Pignon d'entrée
1111	Antriebsrad	1111	Drive gear	1111	Roue d'entrée
1120	Wälzlager	1120	Roller bearing	1120	Palier
1121	Wälzlager	1121	Roller bearing	1121	Palier
1130	Sicherungsring	1130	Circlip	1130	Circlip
1131	Passfeder	1131	Key	1131	Clavette
1132	Sicherungsring	1132	Circlip	1132	Circlip
1133	Sicherungsring	1133	Circlip	1133	Circlip
1134	Passscheibe	1134	Shim	1134	Rondelle d'ajustage
1135	Passscheibe	1135	Shim	1135	Rondelle d'ajustage
1136	Buchse	1136	Socket	1136	Douille
1137	Passfeder	1137	Key	1137	Clavette
1139	Sicherungsring	1139	Circlip	1139	Circlip
1140	Passscheibe	1140	Shim	1140	Rondelle d'ajustage
1141	Passscheibe	1141	Shim	1141	Rondelle d'ajustage
1142	Sicherungsring	1142	Circlip	1142	Circlip
1143	Passscheibe	1143	Shim	1143	Rondelle d'ajustage
1144	Passscheibe	1144	Shim	1144	Rondelle d'ajustage

Bestellangaben
Order details
Informations de commande

Kontaktdaten / Contact details / Contacts:

Firma / Company / Entreprise:

Straße / Street / Rue

Stadt / Town / Ville:

PLZ / Postcode/ Code postal.

Telefon / Telephone / Téléphone:

Fax:

E-mail:

Getriebebau NORD

Rudolf-Diesel-Straße 1
D-22941 Bargteheide
Telefon +49(0) 4532/401-0
Telefax +49(0)4532/401-253
E-Mail info@nord.com
www.nord.com

DE

Diese NORD Ersatzteilliste beinhaltet eine standardisierte Darstellung der NORD Getriebe. Um Ihnen das Finden und Nachbestellen von Ersatzteilen zu erleichtern, finden Sie am Ende der Ersatzteilliste ein Bestellformular mit wichtigen Hinweisen zur Bestimmung der richtigen Teile.

Für Rückfragen stehen wir Ihnen gerne zur Verfügung. Ihren lokalen Ansprechpartner finden Sie unter http://locator.nord.com

GB

This NORD spare parts list contains a standardised depiction of NORD gear units. In order to enable you to find and re-order replacement parts more easily, you can find an order form and important information regarding the identification of the correct components at the end of this spare parts list.

We will be glad to help you if you have any queries: You can find your local contact partner under http://locator.nord.com

FR

Cette liste de pièces de rechange NORD contient une représentation standard des réducteurs NORD. Pour faciliter la recherche et la commande de pièces de rechange, un formulaire de commande se trouve à la fin de la liste des pièces de rechange et vous donne toutes les informations essentielles pour déterminer les pièces dont vous avez besoin.

En cas de questions, n'hésitez pas à nous contacter. Pour connaître votre interlocuteur local, veuillez consulter le site http://locator.nord.com

Bestellangaben
Order details
Informations de commande

Erläuterung des Typenschildes
Explanation of the rating plate
Explication de la plaque signalétique

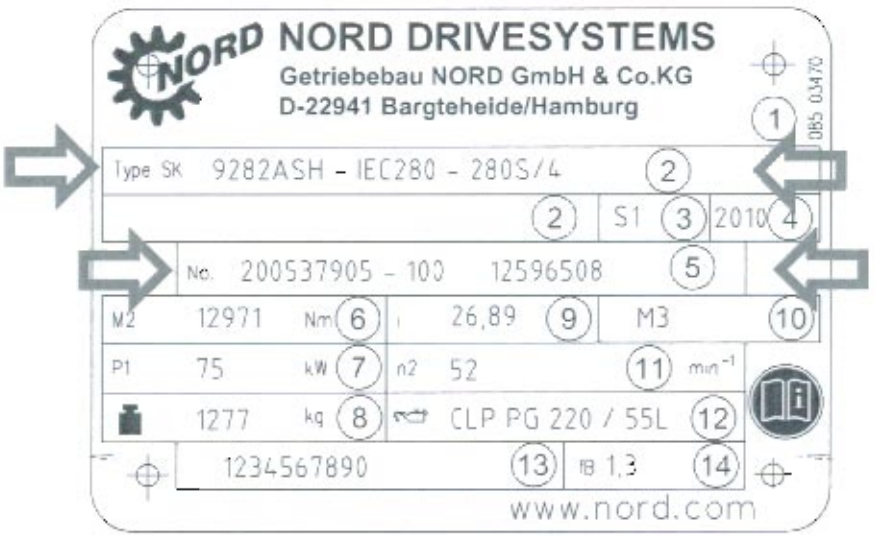

DE

1 Matrix – Barcode
2 NORD - Getriebetyp
3 Betriebsart
4 Herstellungsjahr
5 Fabrikationsnummer
6 Nenndrehmoment der Getriebeabtriebswelle
7 Antriebsleistung
8 Gewicht entsprechend Auftragsausführung
9 Gesamte Getriebeübersetzung
10 Einbaulage
11 Nenndrehzahl der Getriebeabtriebswelle
12 Schmierstoffart, -viskosität und –menge
13 Kundenmaterialnummer
14 Betriebsfaktor

GB

1 Matrix – Barcode
2 NORD gear unit type
3 Operating mode
4 Year of manufacture
5 Serial number
6 Rated torque of gear unit output shaft
7 Drive power
8 Weight according to ordered version
9 Overall gear unit ratio
10 Installation orientation
11 Rated speed of gear unit output shaft
12 Lubricant type, viscosity and quantity
13 Customer's part number
14 Operating factor

FR

1 Code matriciel, à barres
2 Type de réducteur NORD
3 Mode de fonctionnement
4 Année de fabrication
5 Numéro de série
6 Couple nominal de l'arbre de sortie du réducteur
7 Puissance d'entraînement
8 Poids selon l'exécution du contrat
9 Rapport de réduction total
10 Position de montage
11 Vitesse de rotation nominale de l'arbre de sortie du réducteur
12 Type de lubrifiant, viscosité et quantité
13 Numéro d'article client
14 Facteur de service

Ersatzteil-Bestellung / Replacement parts order / Commande de pièces de rechange:

Bezeichnung / Designation / Désignation:

Pos.-Nr. / Item No. / N° pos :

Stückzahl / Pieces / Quantité:

Getriebetyp / Gear unit type / Type de réducteur:

Fabrikationsnummer / Serial No. / Numéro de série

INDUSTRIAL ELECTRONICS

KOSTAL

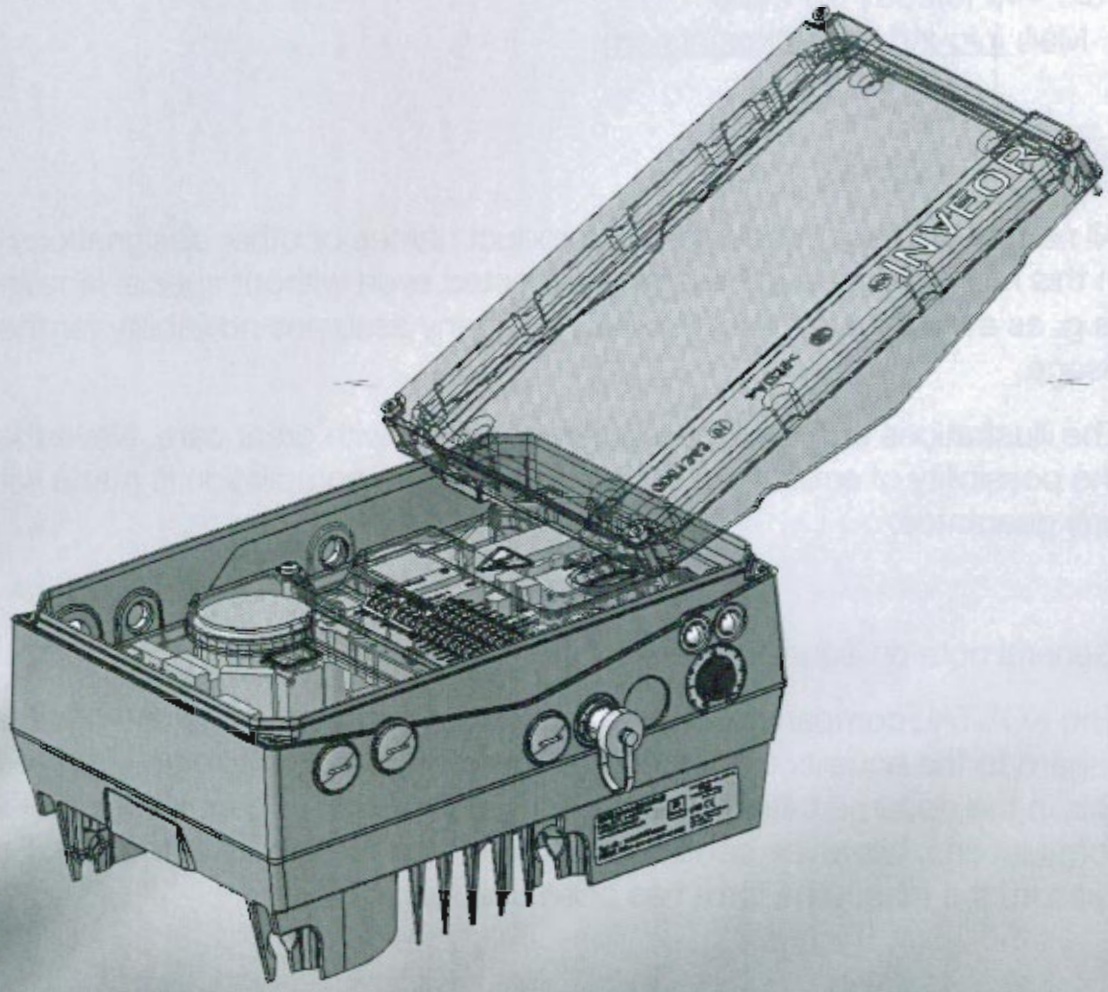

Smart connections.

Operating manual INVEOR

Table of contents

1 Important information 7
1.1 Notes on the documentation 7
1.1.1 Other applicable documents 7
1.1.2 Storing the documentation 7
1.1.3 Symbols 7
1.2 Qualified staff 8
1.3 CE marking 8
1.4 Safety instructions 8
1.4.1 General information 9
1.4.2 Transport & storage 10
1.4.3 Commissioning 11
1.4.4 Operation 12
1.4.5 Repairs 13
1.4.6 Disassembly & disposal 13
1.5 Proper use 14
1.6 Responsibility 14
1.7 Contacts for information 15
2 Overview of the drive control 16
2.1 Model description 16
2.2 Scope of delivery 17
2.3 Description of the INVEOR drive control 18
3 Installation 18
3.1 Safety instructions during installation 18
3.2 Installation requirements 19
3.2.1 Suitable ambient conditions 19
3.2.2 Suitable installation location for the motor integrated drive control ... 20
3.2.3 Basic connection versions 20
3.2.4 Short circuit and ground protection 21
3.2.5 Wiring instructions 22
3.2.6 Preventing electromagnetic interferences 22
3.3 Installing the drive control integrated in the motor 23
3.3.1 Mechanical installation 23
3.3.2 Power connection 25
3.3.3 Connections for brake resistor 26
3.3.4 Control connections 26
3.3.5 Terminal connection diagram 29
3.4 Installing the wall-mounted drive control 29
3.4.1 Suitable installation location for wall mounting 29
3.4.2 Mechanical installation 31
3.4.3 Power connection 35
3.4.4 Brake chopper 35
3.4.5 Control connections 35
4 Commissioning 36
4.1 Safety instructions during commissioning 36
4.2 Communication 37
4.3 Block diagram 38

Overview of installation sizes

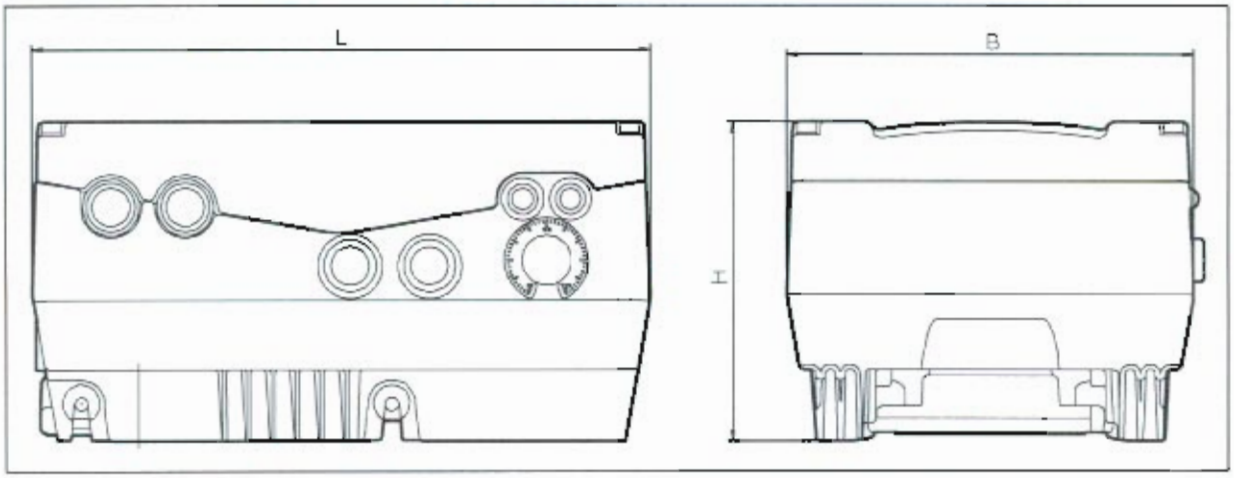

Dimensioned drawings

The drive controls are available in the following performance classes and under the specified installation size names.

Installation size INVEOR motor integrated	MA	MB	MC	MD
Recommended motor power [kW]	0.55 / 0.75 / 1.1 / 1.5	2.2 / 3.0 / 4.0	5.5 / 7.5	11.0 / 15.0 / 18.5 / 22.0
Dimensions [L x B x H] mm	233 x 153 x 120	270 x 189 x 133	307 x 223 x 181	414 x 294 x 238

Installation sizes

1 Important information

This chapter contains important information on the safe handling of the product and on the operating manual.

1.1 Notes on the documentation

The following notes are a directory for the overall documentation.

We assume no liability for any damage resulting from the non-observance of this manual.

Provide this manual to the operator of the system so that it will be available when required.

1.1.1 Other applicable documents

This refers to all manuals that describe how to operate the drive control system, and any other manuals for equipment parts in use. Download the 3D files (.stp) for INVEOR and adapter plates under www.kostal.com/industrie.

A parameter description is available for download (www.kostal.com/industrie) for parameterising the drive control system. In the download, you will find al the information required for correct parameterising.

1.1.2 Storing the documentation

Store this manual and all other applicable documents safely so they will be available when required.

1.1.3 Symbols

⚠ DANGER

Note on safety: Non-observance will result in death or serious injury.

⚠ WARNING

Note on safety: Non-observance can lead to death or serious injury.

Please read this information carefully, as it is provided for your personal safety and will also support a longer life for the drive control and the connected devices.

1.4.1 General information

⚠ WARNING

This drive control contains dangerous voltage and controls revolving mechanical parts that may be dangerous.

Disregarding warnings or non-compliance with the notes in this manual can result in death, serious injury or serious damage to property.

- Only appropriately trained persons may perform work on this drive control. These persons must be familiar with all safety instructions and all measures relating to installation, operation and maintenance that are contained in this manual. Proper and safe operation of the drive control requires proper transport, installation, operation and maintenance.

⚠ WARNING

Danger of fire or electric shock.

Improper use, changes and the use of spare parts and accessories not sold or recommended by the manufacturer of the drive control can cause fire, electric shock and injury.

- The cooling elements in the drive control and motor can reach temperatures above 70 °C. Ensure that there is sufficient distance from neighbouring components during installation. Allow sufficient cooling time before working on the drive control or the motor. If necessary, protection should be installed against accidental contact.

ATTENTION!

The drive control can only be operated safely if the required environmental conditions listed in the "Suitable environmental conditions" chapter are fulfilled.

1.4.3 Commissioning

⚠ **WARNING**

Danger of injury through electric shock.

Non-observance of warnings can result in serious injury or damage.

- Only hard-wired network connections are permitted. The device must be grounded (DIN EN 61140; VDE 0140-1).
- Frequency converters of the INVEOR series can contain contact currents (leakage currents) > 3.5 mA. According to chapter 4.3.5.5.2 of DIN EN 61800-5-1, a reinforced protective ground wire (at least 10 mm^2 Cu or 16 mm^2 Al) must be used.
- If three-phase frequency converters are in use, it is not permitted to use standard type A FI protection switches, or RCDs (residual current-operated protective devices) to protect from direct or indirect contact. According to DIN VDE 0160, section 5.5.2 and EN 50178, section 5.2.11.1, the FI protection switch must be universal current sensitive (RCD type B).
- The following terminals can lead to dangerous currents even when the motor is not running:
  - Supply terminals X1: L1, L2, L3
  - Motor connection terminals X2: U, V, W
  - Connecting terminals X6, X7: Relay contacts for relays 1 and 2
- If different voltages are in use (e.g. +24 V/230 V), crossing cable runs are never permitted. The operator must also ensure compliance with the applicable regulations (e.g. double or strengthened insulation acc. to DIN EN 61800-5-1).
- The drive control contains components susceptible to electrical discharge. These components can be destroyed through improper handling; therefore, precautionary measures against electrostatic charges must be taken when work is performed on these components.

1.4.5 Repairs

ATTENTION!

Risk of damaging the drive control.

If the notes are not observed, the drive control could be damaged and destroyed during subsequent start-up.

- Repairs of the drive control may only be performed by the KOSTAL Service department.

⚠ **WARNING**

Danger of injury through electric shock.

Non-observance of warnings can result in serious injury or damage.

- When the drive control is disconnected from the mains voltage, parts and connections of the device subject to current may not be touched immediately in case the condensers are still charged.

1.4.6 Disassembly & disposal

☞ *Screw and snap-on connections are easy to release and allow the drive control to be dismantled into its individual parts. These parts can be sorted for recycling. Please comply with local regulations during disposal.*

☞ *Components with electronic parts may not be placed in normal household waste. They have to be collected separately with old electric and electronic equipment in accordance with applicable legislation.*

means of a risk assessment for the machine or system and its electrical equipment, and is determined with a selection of the circuit category according to DIN EN 13849 "Safety of machinery – Safety-related parts of control systems".

1.7 Contacts for information

Further information is available from:

Central service hotline

Tel: +49 2331 8040-4848
Monday to Friday: 7.00 to 17.00 (local time)

Fax: +49 2331 8040-4811

Email: INVEOR-service@kostal.com

Internet address

Customers can access technical and general information from the following address:

www.kostal.com/industrie

2.2 Scope of delivery

Compare your product to the scope of delivery described below.

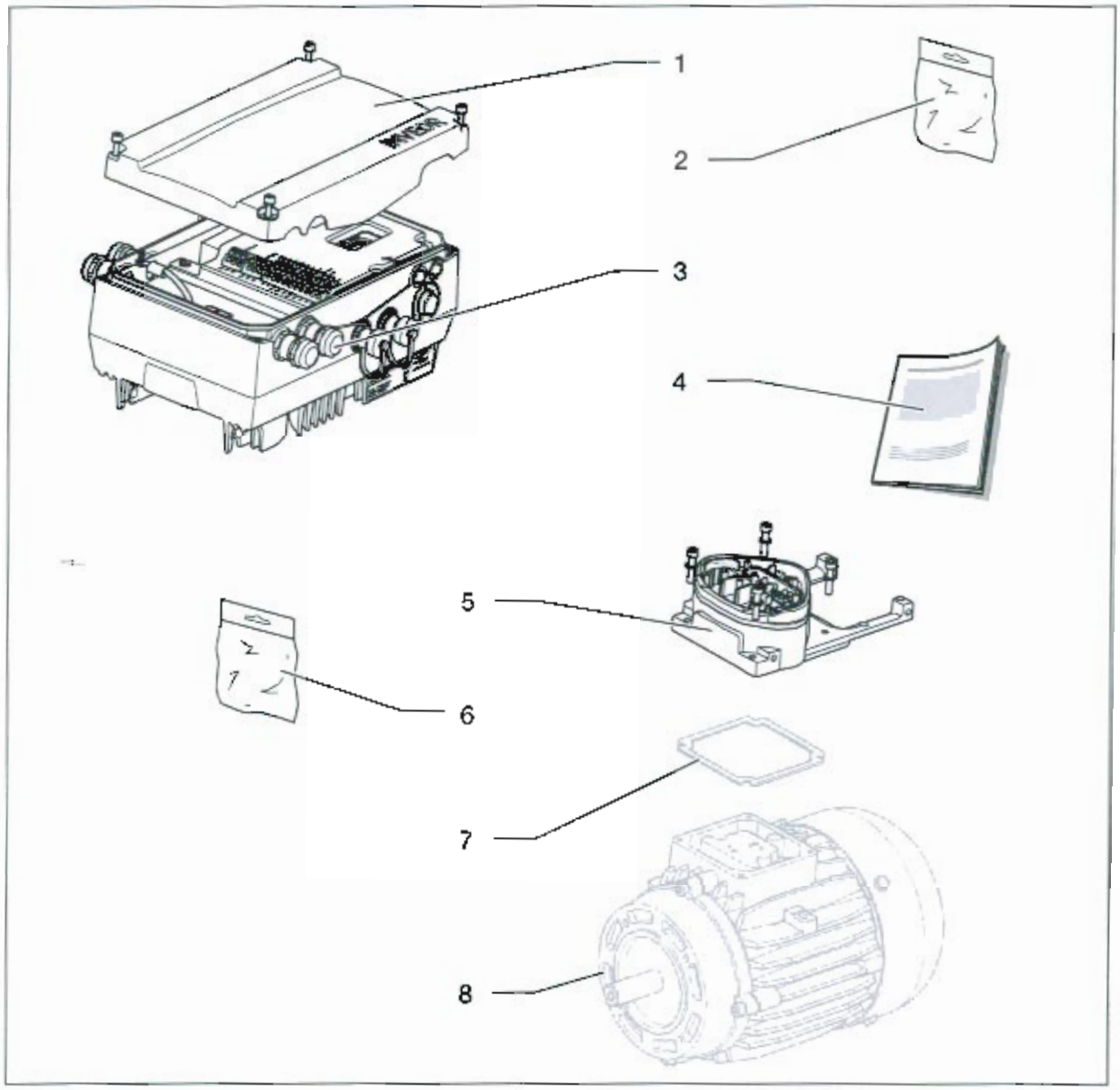

Fig. 2: Scope of delivery

Key	
Drive control article number	**Adapter plate article number**
1 Drive control (variant)	5 Adapter plate with connecting terminal
2 Poly bag with fastening bolts	6 Poly bag with connecting material for terminal block
3 Cable screw connections	
4 Operating manual	
	7 Seal (not part of the scope of delivery)
	8 Motor (not part of the scope of delivery)

3.2 Installation requirements

3.2.1 Suitable ambient conditions

Altitude of the installation site:	up to 1,000 m above sea level / over 1,000 m with reduced performance (1% per 100 m) (max. 2,000 m)
Ambient temperature:	-25 °C to +50 °C (different ambient temperatures may be possible in individual cases)
Relative humidity:	≤ 96%, condensation not permitted
Resistance to vibration and shock:	acc. to FN 942 017 part 4; 5.3.3.3 Combined test 2; 5...200 Hz for sinusoidal oscillation
Electromagnetic compatibility:	Immune to interference acc. to DIN EN 61800-3
Cooling:	Surface cooling: installation sizes A to C: free convection; installation size C: optionally with integrated fan installation size D: with integrated fans

Tab. 1: Ambient conditions

- Make certain that the housing type (protection type) is suitable for the operating environment:
  - Ensure that the seal between the motor and the adapter plate is inserted correctly.
  - All unused cable screw connections have to be sealed.
  - Check that the cover of the drive control is closed and bolted down tightly.

Although the drive control can, in principle, be subsequently painted, the user must nevertheless check the material compatibility of the paint that is to be used. A failure to comply with this can eventually result in the loss of the protection class (particularly in respect of seals and fibre-optic elements). The standard colour is black (RAL 9005).
Disassembling the circuit boards (even for the purpose of painting the housing sections) renders the warranty void!
Mounting points and sealing surfaces must be kept free of paint for purposes of EMC and earthing!

ATTENTION!

Risk of damaging the drive control.

The correct phase sequence must be observed when the drive control is connected, as the motor could otherwise be overloaded.

- Ensure that the phase sequence is correct when connecting the motor.

The supplied assembly material can be used to connect core end sleeves and cable shoes. Fig. 4 shows the different connection options.

Unused open cable ends in the motor terminal box must be insulated.

If a PTC or Klixxon is used, the electric jumper fitted on the connection terminal for the PTC in the delivery state has to be removed.

The cross-section of the supply line has to be designed according to the transfer category and the maximum permitted current. The contractor starting up the device must ensure the power line protection.

3.2.4 Short circuit and ground protection

The drive control contains an internal short circuit and ground protection.

3.3 Installing the drive control integrated in the motor

3.3.1 Mechanical installation

Proceed as follows when mechanically installing the drive control:

1. Open the standard motor connection box.
2. Disconnect the wires from the connection terminals. Memorise or write down the connection sequence.
3. Remove the motor terminal block if necessary.
4. Remove the fastening screws of the connection housing and remove it. Make sure that the seal is not damaged.

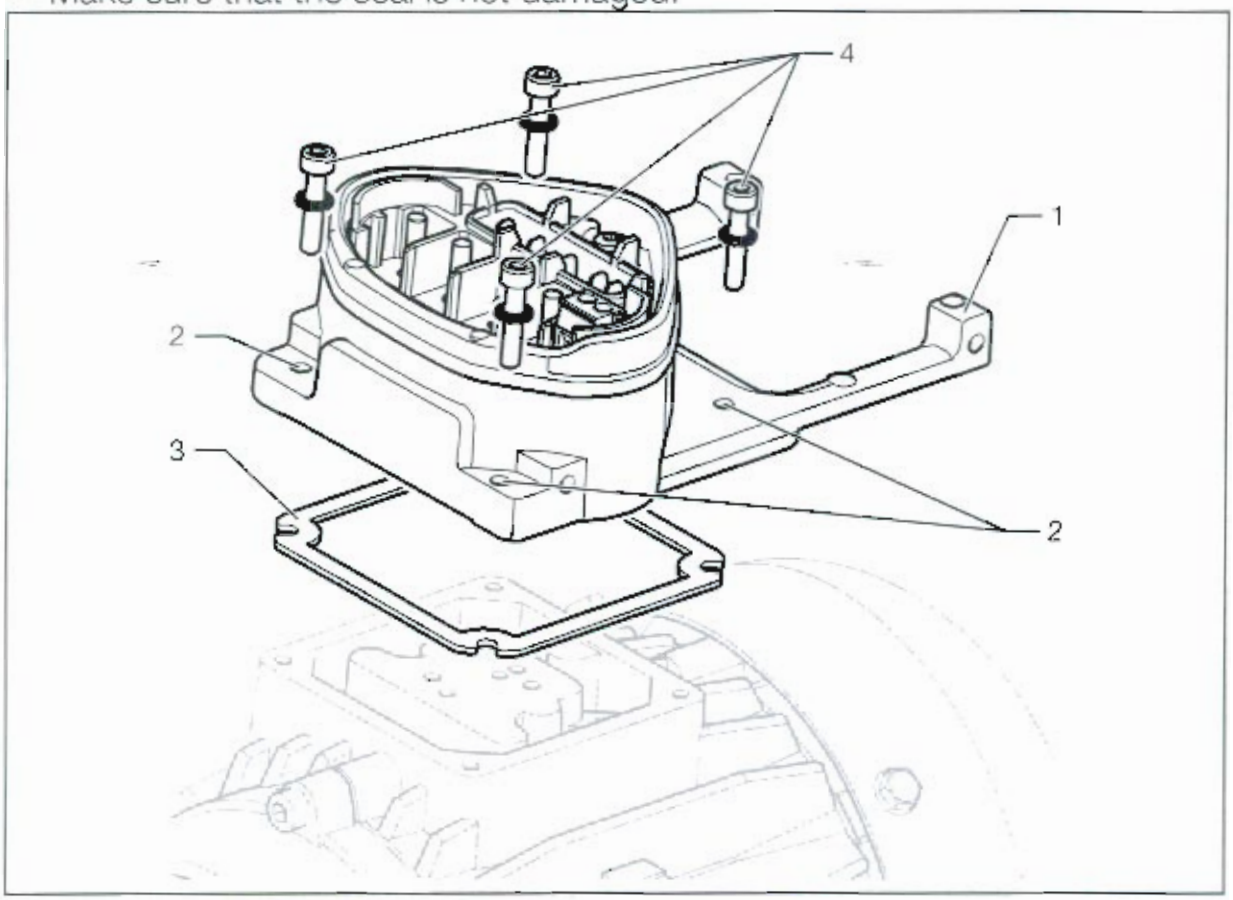

Fig. 5: Assembly sequence: Connection box – adapter plate

The standard adapter plate is an adapter plate whose underpart has not been refinished. There are no boreholes.

Individual tailored adapter plates for selected motors are available from KOSTAL.

5. Adjust the adapter plate (1) by creating the appropriate boreholes (2) for attachment to the motor.

3.3.2 Power connection

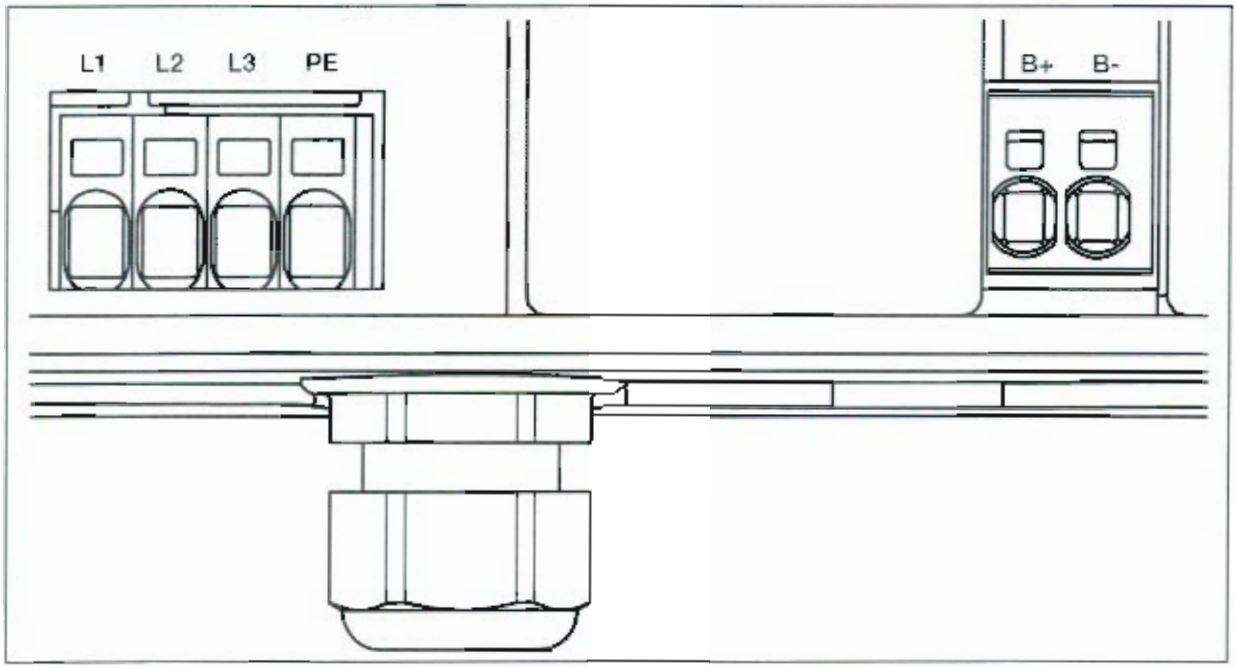

Fig. 7: Power connection

- Unscrew the four bolts from the housing cover of the drive control and remove the cover.
- Guide the power cord through the cable connection and connect the phases to contacts L1, L2, L3 and the ground cable to the PE contact of the connection terminal. The cable provides strain relief, and the PE connection line has to be connected in a leading fashion (considerably longer).

If a brake resistor is connected, screened and doubly insulated lines must be used.

Terminal no.	Designation	Configuration
1	L1	Mains phase 1
2	L2	Mains phase 2
3	L3	Mains phase 3
4	PE	Ground cable

Tab. 2: Terminal configuration X1

Terminal no.	Designation	Configuration
1	24 V In	ext. power supply
2	GND (ground)	Mass
3	24 V Out	int. power supply
4	GND (ground)	Mass
5	24 V Out	int. power supply
6	Dig. In 1	Target value release (parameter 1,131)
7	Dig. In 2	Free (not allocated)
8	Dig. In 3	Free (not allocated)
9	Dig. In 4	Error reset (parameter 1,180)
10	En-HW (release)	Hardware release
11	Dig. Out 1	Fault message (parameter 4,150)
12	Dig. Out 2	Free (not allocated)
13	A. Out 0 ... 20 mA	Actual frequency (parameter 4,100)
14	10 V Out	for ext. voltage divider
15	A. Out 0 ... 10 V	Actual frequency (parameter 4,100)
16	A GND (ground 10 V)	Mass
17	A. In 1	Analogue input 1
18	A GND (ground 10 V)	Mass
19	A. In 2	Analogue input 2
20	A GND (ground 10 V)	Mass

Tab. 4: Terminal configuration X5

3.3.5 Terminal connection diagram

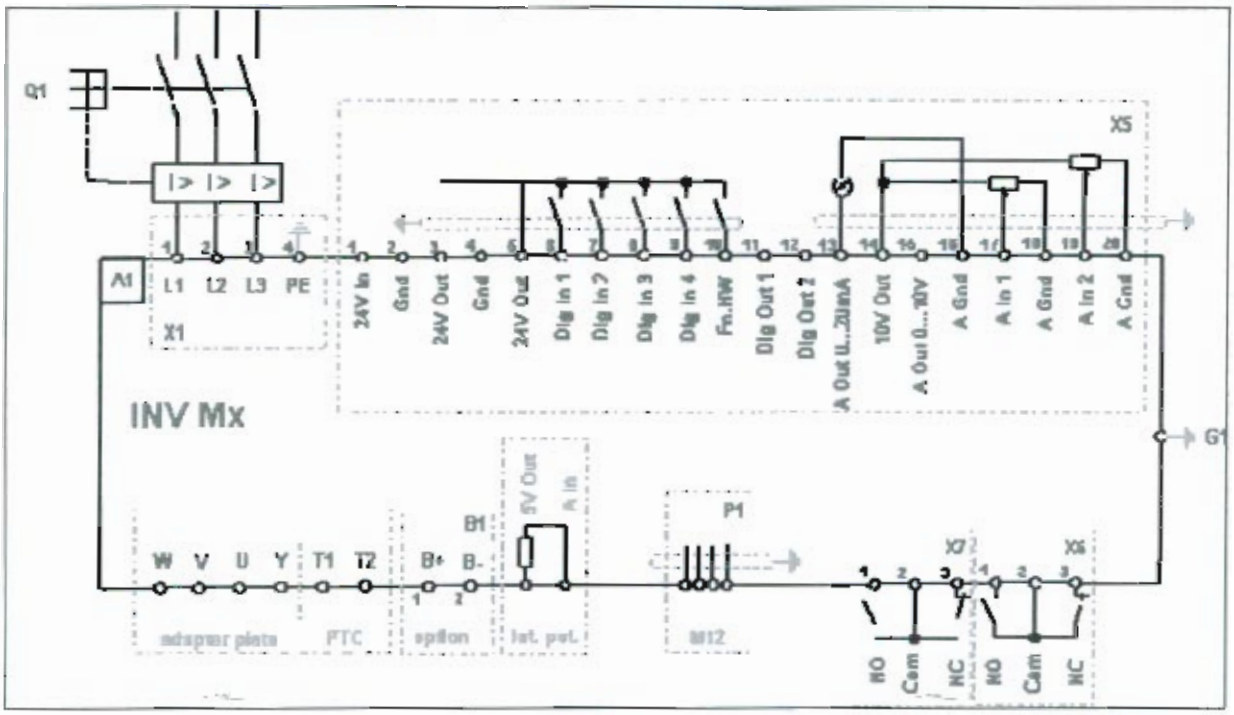

Fig. 9: Connection diagram

The drive control is operational after the 400 V power supply has been switched on. Alternatively, the drive control can be started up by connecting an external 24 V power supply.
The settings required for this are described in the "System parameters" chapter. A detailed description of the functions of the drive control can be found in the parameter description (www.kostal.com/industrie).

3.4 Installing the wall-mounted drive control

3.4.1 Suitable installation location for wall mounting

- Ensure that the installation location for a INVEOR wall mounting meets the following conditions:
  - The drive control has to be mounted on an even and fixed surface.
  - The drive control may only be mounted on non-flammable bases.
  - There must be a minimum of 20 cm clearance all around the drive control to ensure free convection.

3.4.2 Mechanical installation

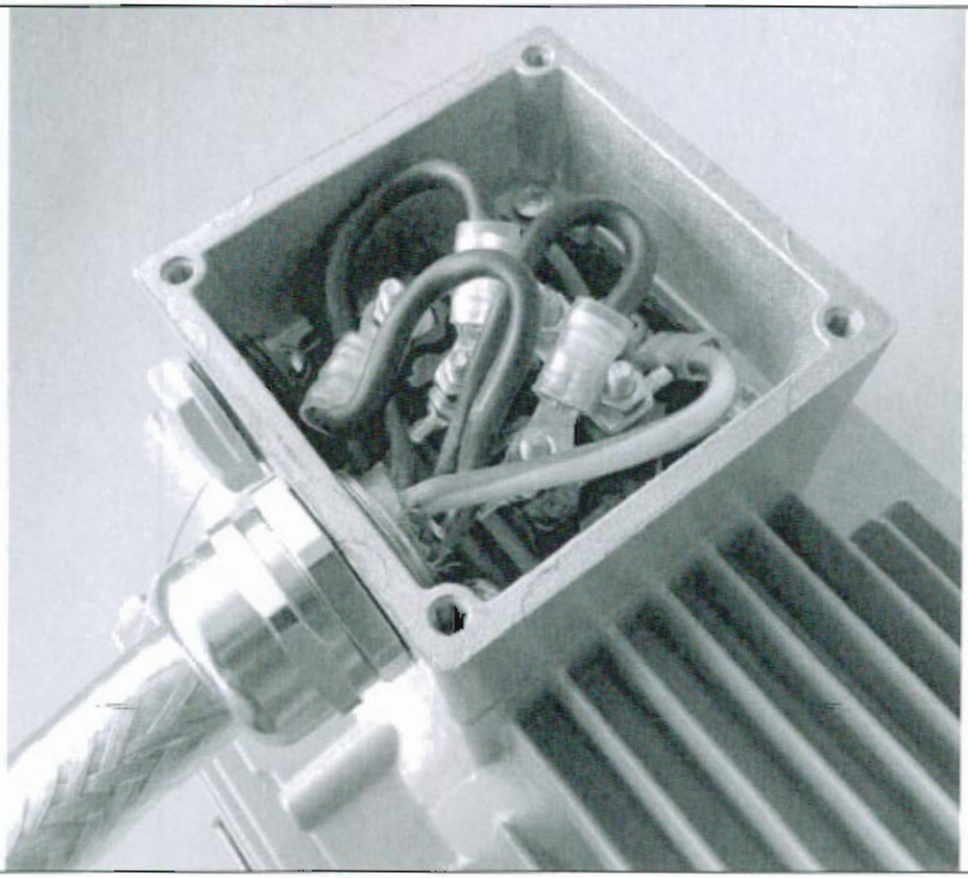

Fig. 11: Wiring on the motor connection box

- Open the motor connection box.

ATTENTION

Depending on the required motor voltage, the star or triangle connection must be made in the motor connection box!

- Use a suitable EMC screw connection to attach the screened cable to the motor connection box and ensure that the screening contact is in order (large surface).
- Connecting a PE connection in the motor connection box is mandatory.
- Close the motor connection box.

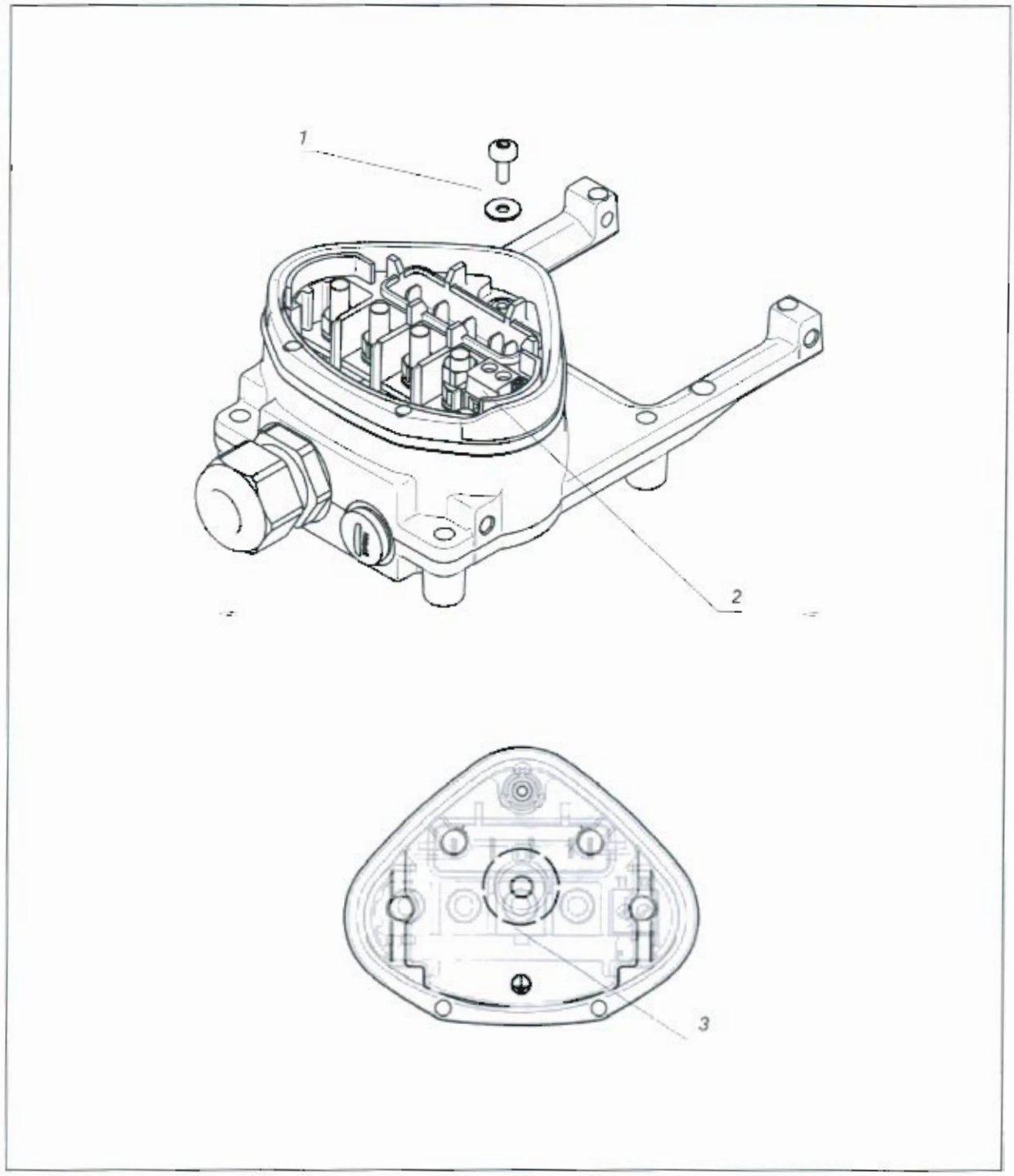

Fig. 13: Wiring

1. Release the screw (1) to remove the contact plate from the adapter plate. The (M6) PE connection (3) is underneath this contact plate.
2. Guide the connection cable from the motor to the adapter plate through the integrated EMC screw connection.
3. This connection has to be made to the same ground potential of the motor. The cross-section of the equipotential bonding line must correspond to at least the cross-section of the power cord.
4. Reattach the contact plate using the screw (**1**).

3.4.3 Power connection

The power connections should be designed as described in section 3.3.2 ff. "Installing the drive control integrated in the motor".

3.4.4 Brake chopper

The brake connections should be designed as described in section 3.3.3 ff. "Installing the drive control integrated in the motor".

3.4.5 Control connections

The control connections should be designed as described in section 3.3.4 ff. "Installing the drive control integrated in the motor".

4.2 Communication

The drive control can be commissioned in the following ways:

– Using the PC software

Fig. 15: PC software – start screen

– Using MMI

Fig. 16: Manual control unit MMI

4.4 Start-up steps

Parameterising is possible prior to installation. Parameterisation can be performed before the drive control is installed in the engine.
The drive control has a 24 V low-voltage input for this purpose, which can supply the electric system without requiring mains power.

The start-up can be performed using a PC communication cable USB at plug M12 with integrated interface converter RS485/RS232 (article no. 10023950) or using the INVEOR manual control unit MMI with connection cable RJ11 at plug M12 (article no. 10004768).

Start-up using the PC:

- Install the INVEORpc software (you can obtain programming software from KOSTAL free of charge).
- Connect the PC to the M12 plug M1 with the optional connection cable.
- Load or determine the motor data record (parameters 33,030 to 33,050); it may be necessary to optimise the speed control (parameters 34,100 to 34,101).
- Make the application settings (ramps, inputs, outputs, target values etc.).
- Optional: Define an access level (1 – MMI, 2 – user, 3 – manufacturer).

Please see also the quickstart guide in chapter 9.5.

In order to ensure an ideal operating structure for the PC software, the parameters are classified into different access levels. There are the following levels:

1. Manual control unit: – the drive control is programmed using the manual control unit

2. User: – the basic parameters can be programmed into the drive control using the PC software

3. Manufacturer: – an extended selection of parameters can be programmed into the drive control using the PC software

PID process control:

The reference for the PID process control is read in percentage steps as in the "frequency setting mode". 100% corresponds to the working range of the connected sensor, which is read in from the active channel (selected by the "PID feedback").
Depending on the control difference, a rotation speed value is output to the control output with the help of the amplification factors for the propotional gain (3,050), integral gain (3,051) and derivative gain (3,052). In order to prevent the integral share from increasing limitlessly in case of uncontrollable control differences, this value is limited to a specific set value (corresponding to the "maximum frequency" (1,021)).

PID inverse:

The PID feedback can be inverted using the 3.061 parameter. The feedback is imported inversely, i.e. 0 V...10 V correspond internally to 100%...0%.
Please note that the reference must also be defined inversely.

An example:

A sensor with an analogue output signal of (0 V...10 V) is to operate as the source of the feedback channel (at AIx). At an output variable of 7 V (70%), this is to be regulated inversely. The internal feedback then corresponds to 100% – 70% = 30%. Accordingly, the specified reference is 30%.

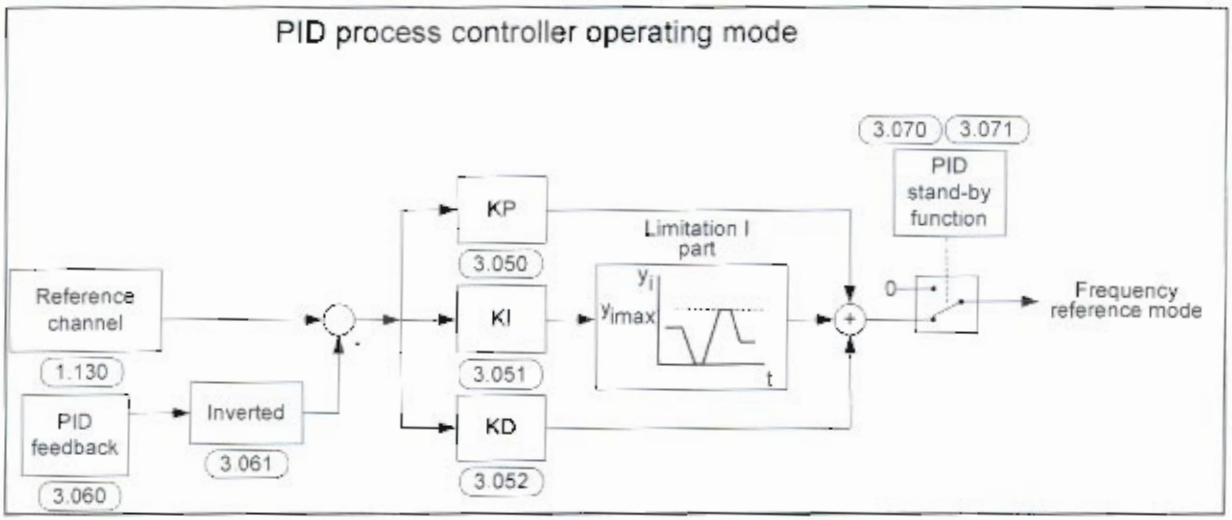

Fig. 18: PID process control

Preset speed:

In this operating mode, preset speed references are transferred to the motor control. There are 7 preset speeds (2,051 to 2,057) that are BCD coded and attached fixedly to digital inputs 1 to 3. These seven preset speeds can be released in three groups via the "preset speed mode" (2,050) parameter:
0 = preset speed 1, 1 = preset speed 1 to 3, 2 = preset speed 1 to 7.

DI 3	DI 2	DI 1	Selection	Parameters	Presetting
0	0	0	Min. frequency	1.020	0 Hz
0	0	1	preset speed 1	20.051	10 Hz
0	1	0	preset speed 2	20.052	20 Hz
0	1	1	preset speed 3	20.053	30 Hz
1	0	0	preset speed 4	20.054	35 Hz
1	0	1	preset speed 5	20.055	40 Hz
1	1	0	preset speed 6	20.056	45 Hz
1	1	1	preset speed 7	20.057	50 Hz

Tab. 7: Logic table of fixed frequencies

5.3 Application parameters

5.3.1 Basic parameters

1.020	Low speed		Unit: Hz	
Relationship to parameter: 1,150 3,070	Parameter manual: p. xy	Transfer status: 2	min: 0 max.: 400 def.: 0	own value (**to be entered!**)
	The low speed is the frequency provided by the drive control as soon as it released and no additional target value is pending. This frequency is not reached if a) acceleration is carried out while the drive is not moving. b) the frequency inverter is blocked. The frequency is then reduced to 0 Hz before it is blocked. c) the frequency inverter reverses (1,150). The revolving field is reversed at 0 Hz. d) the stand-by function (3,070) is active.			

1.021	High speed		Unit: Hz	
Relationship to parameter: 1,050 1,051	Parameter manual: p. xy	Transfer status: 2	min: 5 max.: 400 def.: 50	own value (**to be entered!**)
	The high speed is the frequency produced by the inverter in dependence on the reference.			

1.050	Deceleration 1:		Unit: s	
Relationship to parameter: 1,021 1,054	Parameter manual: p. xy	Transfer status: 2	min: 0,1 max.: 1000 def.: 5	own value (**to be entered!**)
	Deceleration 1 is the time that the inverter takes to brake to 0 Hz from the high speed (1,021). If the set deceleration time cannot be reached, the fastest possible deceleration time is implemented.			

1.054	Ramp section		Unit: integer	
Relationship to parameter: 1,050 to 1,053	Parameter manual: p. xy	Transfer status: 2	min: 0 max.: 6 def.: 0	own value (**to be entered!**)
	Selection of used ramp pair 0 = deceleration 1 (1.050) / acceleration 1 (1.051) 1 = deceleration 2 (1.052) / acceleration 2 (1.053) 2 = digital input 1 (false = ramp pair 1 / True = ramp pair 2) 3 = digital input 2 (false = ramp pair 1 / true = ramp pair 2) 4 = digital input 3 (false = ramp pair 1 / true = ramp pair 2) 5 = digital input 4 (false = ramp pair 1 / true = ramp pair 2) 6 = INVEOR Soft-PLC			

1.100	Control mode		Unit: integer	
Relationship to parameter: 1,130 1,131 2,051 to 2,057 3,050 to 3,071	Parameter manual: p. xy	Transfer status: 2	min: 0 max.: 4 def.: 0	own value (**to be entered!**)
	Selecting the operating mode. After SW release (1,131) and hardware release, the drive control runs as follows: 0 = frequency control mode, with the target value of the selected reference channel (1,130) 1 = PID process control, with the target value of the PID process control (3,050–3,071) 2 = preset speed mode, with the frequencies specified by parameters 2,051–2,057 3 = selection from INVEOR Soft-PLC			

1.132	Start protect		Unit: integer	
Relationship to parameter: 1,131	Parameter manual: p. xy	Transfer status: 2	min: 0 max.: 1 def.: 1	own value (**to be entered!**)
	Selection of the behaviour in response to enable software (parameter 1,131). No effect if autostart was selected. 0 = immediate start when high signal is received at start input of control release 1 = start only in case of rising shoulder at start input of control release 2 = digital input 1 (function active at high signal) 3 = digital input 2 (function active at high signal) 4 = digital input 3 (function active at high signal) 5 = digital input 4 (function active at high signal)			

1.150	Rotational direction		Unit: integer	
Relationship to parameter: 1,131	Parameter manual: p. xy	Transfer status: 2	min: 0 max.: 7 def.: 0	own value (**to be entered!**)
	Selecting the rotational direction specification 0 = dependent on target value (depending on the plus or minus sign of the target value: positive: forward; negative: backwards) 1 = forwards only (rotational direction cannot be changed) 2 = backwards only (rotational direction cannot be changed) 3 = digital input 1 (0 V = forwards, 24 V = backwards) 4 = digital input 2 (0 V = forwards, 24 V = backwards) 5 = digital input 3 (0 V = forwards, 24 V = backwards) 6 = digital input 4 (0 V = forwards, 24 V = backwards) 7 = reference from INVEOR Soft-PLC			

5.3.2 Preset speed mode

This mode has to be selected in parameter 1,100,
see also the section on selecting the operating mode

2.050	Preset speed mode		Unit: integer	
Relationship to parameter: 1,100 2,051 to 2,057	Parameter manual: p. xy	Transfer status: 2	min: 0 max.: 2 def.: 2	own value (**to be entered!**)
	Selection of the digital inputs used for the preset speeds 0 = Digital In 1 (preset speed 1) (2,051) 1 = Digital In 1, 2 (preset speeds 1 - 3) (2,051 to 2,053) 2 = Digital In 1, 2, 3 (preset speeds 1 - 7) (2,051 to 2,057)			

2,051 to 2,057	Preset speed		Unit: Hz	
Relationship to parameter: 1,020 1,021 1,100 1,150 2,050	Parameter manual: p. xy	Transfer status: 2	min: -400 max.: +400 def.: 0	own value (**to be entered!**)
	The frequencies that are to be put out at the digital inputs 1 - 3 specified in parameter 2,050 in dependence on the switching patterns. See chapter 5.2.1 on preset speeds.			

2.153	MOP response time		Unit: s		
Relationship to parameter:	Parameter manual: p. xy	Transfer status: 2	min:	0.02	Own value (**to be entered!**)
			max.:	1000	
			def.:	0.3	
	Indicates the time for which the signal is considered permanent.				

2.154	MOP reference memory		Unit: integer		
Relationship to parameter:	Parameter manual: p. xy	Transfer status: 2	min:	0	Own value (**to be entered!**)
			max.:	1	
			def.:	0	
	Defines whether the target value of the motor potentiometer is retained even after power outage. 0 = deactivated 1 = activated				

5.3.4 PID process controller

This mode has to be selected in parameter 1,100,
the target value source has to be selected in parameter 1,130,
see also chapter 5.2.1, "Explanation of operating modes – preset speed".

3.050	PID proportional gain		Unit:		
Relationship to parameter: 1,100 1,130	Parameter manual: p. xy	Transfer status: 2	min:	0	own value (**to be entered!**)
			max.:	100	
			def.:	1	
	proportional share of PID controller				

3.051	PID integral gain		Unit: 1/s		
Relationship to parameter: 1,100 1,130	Parameter manual: p. xy	Transfer status: 2	min:	0	own value (**to be entered!**)
			max.:	100	
			def.:	1	
	integral share of PID controller				

3.069	PID pesent mode		Unit: integer	
Relationship to parameter: 1.100 3,062 to 3,068	Parameter manual: p. xy	Transfer status: 2	min: 0 max.: 2 def.: 0	own value (**to be entered!**)
	Selection of the digital inputs used for fixed frequencies 0 = Digital In 1 (PID present reference 1) (3,062) 1 = Digital In 1, 2 (PID present references 1 – 3) (3,062 to 3,064) 2 = Digital In 1, 2, 3 (PID present references 1 – 7) (3,062 to 3,068)			

3.070	PID stand-by time		Unit: s	
Relationship to parameter: 1,020	Parameter manual: S. xy	Transfer status: 2	min: 0 max.: 10000 def.: 0	own value (**to be entered!**)
	If the drive control operates the set time with the low speed (parameter 1,020), the motor is stopped (0 Hz), see also Chapter 5.2.1, "PID process control" 0 = disable > 0 = waiting time until stand-by function is enabled			

3.071	PID stand-by hysteresis		Unit: %	
Relationship to parameter: 3,060	Parameter manual: p. xy	Transfer status: 2	min: 0 max.: 50 def.: 0	own value (**to be entered!**)
	Condition for waking up the PID controller from stand-by. Once the control difference exceeds the set value in %, the control begins again, see also "Control mode (parameter 1,100) – PID controller".			

4.024/4.054	AIx filter time		Unit: s	
Relationship to parameter:	Parameter manual: p. xy	Transfer status: 2	min: 0.02 max.: 1.00 def.: 0	own value (**to be entered!**)
	Filter time of analogue inputs in seconds.			

4.030/4.060	AIx function		Unit: integer	
Relationship to parameter:	Parameter manual: p. xy	Transfer status: 2	min: 0 max.: 1 def.: 0	own value (**to be entered!**)
	Function of analogue inputs 1/2 0 = analogue input 1 = digital input			

4.033/4.063	AIx physical unit		Unit:	
Relationship to parameter: 4,034/4,064 4,035/4,065	Parameter manual: p. xy	Transfer status: 2	min: 0 max.: 10 def.: 0	own value (**to be entered!**)
	Selection of different physical values to be displayed. 0 = % 1 = bar 2 = mbar 3 = psi 4 = Pa 5 = m^3/h 6 = l/min 7 = °C 8 = °F 9 = m 10 = mm			

5.3.7 Analogue output

4.100	AO1 function		Unit: integer	
Relationship to parameter: 4,101 4,102	Parameter manual: p. xy	Transfer status: 2	min: 0 max.: 40 def.: 0	own value (**to be entered!**)
	Selection of the process value that is output at the analogue output. The standardisation (4,101/4,102) has to be adapted, depending on the selected process value. 0 = no signal 1 = intermediate circuit voltage 2 = supply voltage 3 = motor voltage 4 = motor current 5 = actual frequency 6 = rotation speed measured externally by speed sensor (if available) 7 = current angle or position (if available) 8 = IGBT temperature 9 = interior temperature 10 = analogue input1 11 = analogue input2 12 = target frequency 13 = motor power 14 = torque 15 = field bus			

4.101	AO1 minimum output		Unit:	
Relationship to parameter: 4,100	Parameter manual: p. xy	Transfer status: 2	min:-10,000,000 max.:+1,000,000 def.: 0	own value (**to be entered!**)
	Describes which area is to be resolved to the 0-10 V output voltage or the 0-20 mA output current.			

4.102	AO1 maximum output		Unit:	
Relationship to parameter: 4,100	Parameter manual: p. xy	Transfer status: 2	min: 0 max.:+1,000,000 def.: 0	own value (**to be entered!**)
	Describes which area is to be resolved to the 0-10 V output voltage or the 0-20 mA output current.			

4.152/4.172	DOx off		Unit:	
Relationship to parameter: 4,150/4,170	Parameter manual: p. xy	Transfer status: 2	min: 0 max.:1,000,000 def.: 0	own value (**to be entered!**)
	If the set process value exceeds the switch-on limit, the output is set to 1.			

5.3.9 Relay

For relays 1 and 2 (Rel.x – display Rel. 1/Rel. 2)

4.190/4.210	Rel.x function		Unit: integer	
Relationship to parameter: 4,191/4,211 4,192/4,212	Parameter manual: p. xy	Transfer status: 2	min: 0 max.: 500 def.: 0	own value (**to be entered!**)
	Selection of the process value to which the output should switch. 0= not allocated / INVEOR Soft-PLC 1= intermediate circuit voltage 2= supply voltage 3= motor voltage 4= motor current 5= actual frequency 6= – 7= – 8= IGBT temperature 9= interior temperature 10= error (NO) 11= inverted error (NC) 12= final release levels 13= digital input1 14= digital input 2 15= digital input 3 16= digital input 4 17= ready for operation 18= ready 19= operation 20= ready for operation + ready 21= ready for operation + ready + operation 22= ready + operation 23 = motor power 24 = torque 25 = field bus 50 = motor current limit active			

5.3.10 External fault

5.010/5.011	External fault 1/2		Unit: integer	
Relationship to parameter: 4,110 to 4,113	Parameter manual: p. xy	Transfer status: 2	min: 0 max.: 4 def.: 0	own value (**to be entered!**)
	Selection of the source from which an external error can be reported. 0 = disable 1 = digital input 1 2 = digital input 2 3 = digital input 3 4 = digital input 4 If the selected digital input has a high signal, the inverter switches to error no. 23/24 external fault 1/2. Parameters 4,110 to 4,113 DIx inverse can be used to invert the logic of the digital input.			

5.3.11 Motor current limit

This function limits the motor current to a parameterised maximum value after a parameterised current-time surface has been reached.

This motor current limit is monitored at application level and thereby limits with relatively low dynamics. This has to be considered when selecting this function.

The maximum value is determined using the "motor current limit in %" parameter (5,070). This is given in percent and relates to the nominal motor current specified in the "motor current" type plate data (33,031).

The maximum current-time surface is calculated from the product of the "motor current limit in s" parameter (5,071) and the fixed over-current of 50% of the required motor current limit.

As soon as this current-time surface is exceeded, the motor current is restricted to the limit value by reducing the rotation speed. If the output current of the drive control exceeds the motor current (parameter 33,031) multiplied by the set limit in % (parameter 5,070) for the set time (parameter 5,071), the speed of the motor is reduced until the output current is below the set limit.

5.4 Performance parameters

5.4.1 Motor data

33.001	Type of motor		Unit: Integer	
Relationship to parameter: 34,010	Parameter manual: S. xy	Transfer status: 1	min: 1 max.: 2 def.: 1	own value (**to be entered!**)
	Selecting the type of motor 1 = asynchronous motor 2 = synchronous motor The parameters are shown depending on the type of motor selected. The type of control (parameter 34,010) must also be selected.			

33.015	R optimisation		Unit: %	
Relationship to parameter:	Parameter manual: p. xy	Transfer status: 1	min: 0 max.: 200 def.: 100	own value (**to be entered!**)
	If necessary, this parameter can be used to optimise the start-up behaviour.			

33.031	Motor current		Unit: A	
Relationship to parameter: 5,070	Parameter manual: p. xy	Transfer status: 1	min: 0 max.: 150 def.: 0	own value (**to be entered!**)
	This is used to set the nominal motor current $I_{M,N}$ for either the star or triangle connection.			

33.110	Motor voltage		Unit: V	
Relationship to parameter:	Parameter manual: p. xy	Transfer status: 1	min: 0 max.: 680 def.: 0	own value (**to be entered!**)
	This is used to set the nominal motor voltage $U_{M,N}$ for either the star or triangle connection.			

33.111	Motor cos phi		Unit: 1	
Relationship to parameter:	Parameter manual: p. xy	Transfer status: 1	min: 0.5 max.: 1 def.: 0	own value (**to be entered!**)
	The value from the motor's type plate data has to be entered here for the power factor cosphi.			

33.200	Stator inductance		Unit: H	
Relationship to parameter:	Parameter manual: p. xy	Transfer status: 1	min: 0 max.: 100 def.: 0	Own value (**to be entered!**)
	For synchronous motors only. The stator inductivity can be optimised here if the automatically determined value (motor identification) is insufficient.			

33.201	Nominal flow		Unit: mVs	
Relationship to parameter:	Parameter manual: p. xy	Transfer status: 1	min: 0 max.: 5000 def.: 0	Own value (**to be entered!**)
	For synchronous motors only. The nominal flow can be optimised here if the automatically determined value (motor identification) is insufficient.			

5.4.3 Switching frequency

The internal switching frequency (clocking frequency) can be changed in order to control the power element. A high setting reduces noise in the motor but increases EMV emission and losses in the drive control.

34.030	Switching frequency		Unit: Hz	
Relationship to parameter:	Parameter manual: p. xy	Transfer status: 2	min: 1 max.: 4 def.: 2	own value (**to be entered!**)
	Selection of the switching frequency for the converter 1 = 16 kHz 2 = 8 kHz 4 = 4 kHz			

5.4.4 Controller data

34.010	Type of control		Unit: integer	
Relationship to parameter: 33,001 34,011	Parameter manual: p. xy	Transfer status: 2	min: 100 max.: 200 def.: 100	Own value (**to be entered!**)
	Selection of the type of control. 100 = open-loop asynchronous motor 101 = close-loop asynchronous motor 200 = open-loop synchronous motor 201 = close-loop synchronous motor			

34.090	Speed control K_p		Unit: mA/rad/s	
Relationship to parameter:	Parameter manual: p. xy	Transfer status: 2	min: 0 max.: 10,000 def.: 150	own value (**to be entered!**)
	The control boost of the speed control can be optimised here, if the automatically determined results (of the motor identification) are insufficient.			

34.091	Speed control T_n		Unit: s	
Relationship to parameter:	Parameter manual: p. xy	Transfer status: 2	min: 0 max.: 10 def.: 4	own value (**to be entered!**)
	The reset time of the speed control can be optimised here, if the automatically determined results (of the motor identification) are insufficient.			

34.110	Slip trimmer		Unit:	
Relationship to parameter: 33,034	Parameter manual: p. xy	Transfer status: 2	min: 0 max.: 1.3 def.: 1	own value (**to be entered!**)
	This parameter can be used to optimise or deactivate slippage compensation. 0 = deactivated (performance as on the grid) 1 = compensation for slippage..			

34.130	Voltage control reserve		Unit:	
Relationship to parameter:	Parameter manual: p. xy	Transfer status: 2	min: 0 max.: 2 def.: 0,95	own value (**to be entered!**)
	This parameter can be used to adjust voltage output.			

No.	Error name	Description of fault	Possible cause/remedy
15	Stall detection	The drive shaft of the motor is stalled. 5.080	Remove the blockade
22	Confirmation error	The number of maximum automatic confirmations (1,182) was exceeded	Check error history and remedy error
23	External fault 1	The parameterised fault input is active. 5.010	Correct the external fault
23	External fault 2	The parameterised fault input is active. 5.010	Correct the external fault
32	Trip IGBT	Protection of the IGBT module against overcurrent has been triggered	Short circuit in the motor or motor feed line / controller settings
33	Overvoltage of intermediate circuit	The maximum intermediate circuit current has been exceeded	Feedback by motor in generating operation / mains voltage too high / faulty setting for rotation speed control
34	Undervoltage of intermediate circuit	The minimum intermediate circuit current has not been reached	Mains voltage too low
35	Excess motor temperature	Motor PTC has been triggered	Overload of the motor (e.g. high torque at low motor speed) / ambient temperature too high
36	Power failure		A phase is missing / mains voltage has been disrupted
38	Excess IGBT module temperature	Excess IGBT module temperature	Insufficient cooling, low motor speed and high torque, clocking frequency too high
39	Overcurrent	Maximum output current of the converter exceeded	
40	Excess frequency converter temperature	Inside temperature too high	Insufficient cooling, low motor speed and high torque, clocking frequency too high
42	I^2T motor safety shut-off	The internal I2T motor protection (can be parameterised) has been triggered	Long-term overload
43	Ground leak	Ground leak during a motor phase	Insulation error
45	Motor connection disrupted	No motor current in spite of control through frequency	No motor connected

7 Technical data

7.1 General data

This chapter contains the technical data.

Installation size	MA				MB			MC	
Rated motor power [kW] / 4-pole standard asynchronous motor	0.55	0.75	1.1	1.5	2.2	3.0	4.0	5.5	7.5
Ambient temperature for nominal rating [°C]	-25 (non-condensing) to +50 (without derating) *								
Mains voltage [V]	3~ 200 -10% ... 480 +10%								
Mains frequency [Hz]	47 to 63								
Network configurations	TN/TT								
Line current	1.4	1.9	2.6	3.3	4.6	6.2	7.9	10.8	14.8
Nominal current, eff. [I_N at 8 kHz/400 V]	1.7	2.3	3.1	4.0	5.6	7.5	9.5	13.0	17.8
Min. brake resistance [Ω]	100				50			50	
Maximum current, eff.	150% of the nominal current for 60 sec								
Switching frequency of the final level [kHz]	4, 8, 16, (factory setting 8)								
Rotating field frequency [Hz]	0–400								
Protective function	Undervoltage, Overvoltage, I^2t restriction, short circuit, motor –inverter temperature, anti-tilt protection, stall protection								
Process control	PID controller, free configuration								
Dimensions [L x W x H in mm]	233 x 153 x 120				270 x 189 x 133			307x223x181	
Weight including adapter plate [kg]	3.9				5.0			8.7	
Protection type [IPxy] acc. to DIN EN 60529	65								
EMC	approvals acc. to DIN EN 61800-3, class C2								

Tab. 10: Technical data (technical changes reserved)

* in terms of the UL 508C standard, please see chapter 9.4!

8.1 Adapter plates

8.1.1 Motor adapter plates

A standard motor adapter plate (with an integrated terminal board) is available for each INVEOR installation size. Download the 3D files (.stp) for INVEOR and adapter plates under www.kostal.com/industrie.

INVEOR installation size	A	B	C
Power [kW]	0.55 to 1.55	2.2 to 4	5.5 to 7.5
Designation	ADP MA MOT 0000 A00 000 1	ADP MB MOT 0000 A00 000 1	ADP MC MOT 0000 A00 000 1
Part no.	10023106	10026184	10025632

The customer needs to drill the four holes for mounting the standard adapter plate on the motor. Below are technical drawings reflecting the possible locations of the holes for each of the respective installation sizes.

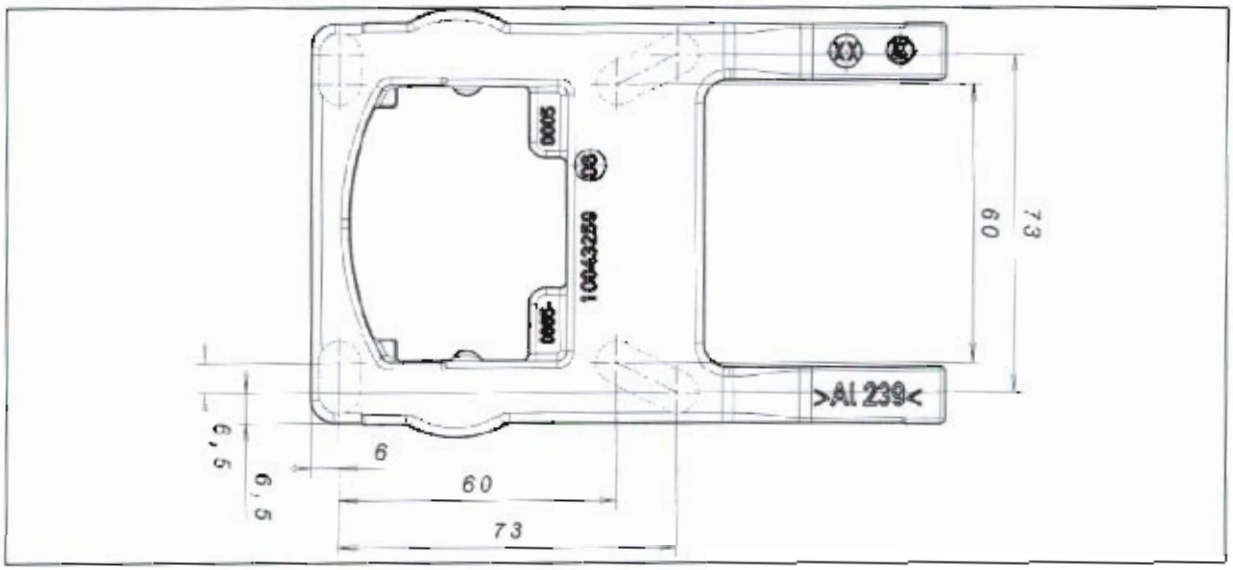

Fig. 21: Hole pattern for BG A standard adapter plate

If the mounting holes are outside the positions indicated, countersunk screws must be used to avoid fouling the attachment of the INVEOR.

If the existing flat seals are in a good condition, they should be reused.

8.1.2 Motor adapter plates (specific)

In addition to the standard engine adapter plates (with integrated terminal boards), there are also specific versions for various engine suppliers available (on request).

8.1.3 Wall adapter plates (standard)

A standard wall adapter plate (with an integrated terminal board) is available for each INVEOR installation size. Download the 3D files for INVEOR and adapter plates under www.kostal.com/industrie. Four holes for mounting the adapter plate, as well as an EMC screw connection, are already present.

INVEOR installation size	A	B	C
Power [kW]	0.55 to 1.55	2.2 to 4	5.5 to 7.5
Designation	ADP MA WDM 0000 A00 000 1	ADP MB WDM 0000 A00 000 1	ADP MC WDM 0000 A00 000 1
Part no.	10023107	10026185	10025932

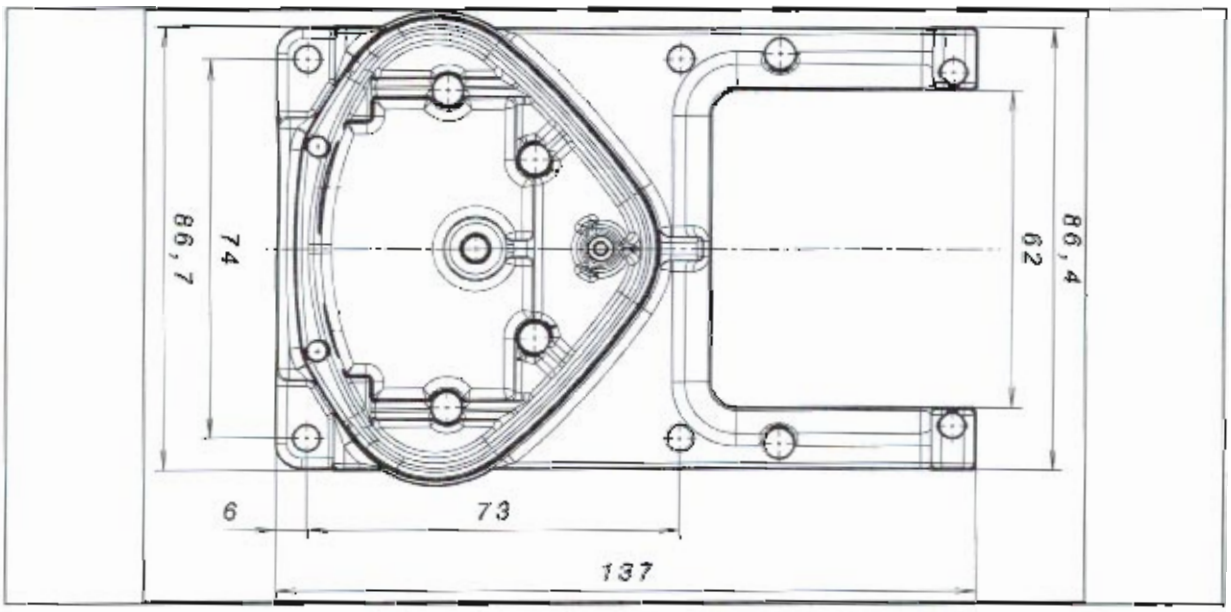

Fig. 24: Hole pattern for BG A standard wall adapter plate

8.2 MMI manual control unit including a 3 m RJ11 connection cable on an M12 plug

The MMI manual control unit (part no. 10004768) is connected to the integrated M12 interface of the INVEOR. This operating unit allows the user to write (program) and/or to visualize all the parameters of the INVEOR. Up to 8 complete data records can be stored in an MMI and copied to other INVEOR. As an alternative to the free INVEORpc software, a complete commissioning is available, external signals are not necessary.

8.3 PC communication cable USB on M12 plug (converter RS485/RS232 integrated)

As an alternative to the MMI manual control unit, an INVEOR can also be put into operation using the PC communication cable (part no. 10023950) and the INVEORpc software. The INVEORpc software is available free of charge at the KOSTAL homepage under www.kostal.com/industrie.

9 Guidelines, Norms and Standards

This chapter contains information about electromagnetic compatibility (EMC), and guidelines, norms and standards.

9.1 EMV limit classes

Please note that EMV limit classes are only reached if the standard switching frequency (clocking frequency) of 8 kHz is complied with. If the device is mounted on the wall, the length of the screened motor cables (with large surfaces on both sides) (max. 3 m) may not exceed the permitted limits.

Wiring suitable for EMV also requires that EMV screw connections be used on both sides (drive control and motor).

ATTENTION!

In a residential environment, this product can cause high-frequency disruptions that may require interference suppression measures.

9.4 Required markings for UL

Required Markings

For installation on industrial machines in accordance with the Standard for Industrial Machinery NFPA79 only.

Maximum Ambient Temperature:

Electronic	Adapter	Ambient
INV MA 4 1.5	ADP MA WDM	35°C
INV MB 4 2.2	ADP MB WDM	45°C
INV MB 4 3.0	ADP MB WDM	40°C
INV MB 4 4.0	ADP MB WDM	35°C
INV MC 4 5.5	ADP MC WDM	40°C
INV MC 4 7.5	ADP MC WDM	35°C

Internal Overload Protection Operates within 60 seconds when reaching 150% of the Motor Full Load Current.

Suitable For Use On A Circuit Capable Of Delivering Not More Than 5kA rms Symmetrical Amperes, 400 Volts Maximum When Protected by Fuses.

Integral solid state short circuit protection does not provide branch circuit protection. Branch circuit protection must be provided in accordance with the Manufacturer Instructions, National Electrical Code and any additional local codes.

All wiring terminals marked to indicate proper connections for the power supply, load and control circuitry.

Instruction for operator and servicing instructions on how to mount and connect the products using the intended motor connection adapter.

Use 75°C copper wires only.

Connection of external motor overtemperature sensing is required.

Stichwortverzeichnis

A
Accessories 78
Ambient conditions 19
Analogue input 27
Automatic reset 50

B
Brake chopper 26
Brake resistor 26

C
Cable screw connections 19, 26
Cable shoes 21, 34
CE marking 8
Commissioning 11
Communication 37
Connection cross-section 22
Control connections 26, 29
Convection 29

D
Digital input 27
Digital output 27
Dimensioned drawings 5
Dimensions 77
Disposal 13

E
Electrical connection 20, 25
EMV limit classes 83
EMV screw connections 22, 83
EMV standard 83
Energy-saving function 42
Error detection 72, 76
EU Declaration of Conformity 8
Excess temperature 75

F
Factory setting 44
Fan 19
FI protection switch 11

G
Ground protection 21

I
I2T limit 68
Information 15
Installation 20, 23, 29
Installation altitude 19
Installation instructions 18
Installation location 20
Installation sizes 5

L
LED flash codes 73
Legal Notice 2

M
Mains connection 25
MMI 37
Motor 17
Motor cos φ 67
Motor current 65
Motor current limit 63
Motor frequency 66
Motor power 66
Motor speed 66
Motor voltage 65, 67
Motorspannung 65

O
Operation 12
Optional accessories 78
Overcurrent 75
Overload 74, 75
Overvoltage 74, 75

P
Parameter set 74
Parameterisation 7, 39
Parameters 40
PID process controller 53
Preset speed 43
Preset speed mode 51

LEGAL NOTICE

KOSTAL Industrie Elektrik GmbH
An der Bellmerei 10
58513 Lüdenscheid
Deutschland
Phone: +49 (0)2351 16-0
Fax: +49 (0)2351 16-2400
E-Mail: info-industrie@kostal.com

Exclusion of liability

All names of usage, trade names, product names or other designations given in this manual may also be legally protected even without special labelling (e.g. as a trademark). The KOSTAL company assumes no liability for their free usage.

The illustrations and texts have been compiled with great care. Nevertheless, the possibility of errors cannot be ruled out. The compilation is made without any guarantee.

General note on equal treatment

The KOSTAL company publishers are aware of the meaning of language with regard to the equality of women and men and always make an effort to reflect this in the documentation. The continuous rendition of gender-equitable formulations, however, conflicted with the easy readability of the text. For this reason, the masculine form has been used as a rule.

© 2011 KOSTAL Industrie Elektrik GmbH

All rights reserved by KOSTAL, including those of reproduction by photocopy and storage in electronic media. Commercial use or distribution of the texts, displayed models, diagrams and photographs appearing in this product is not permitted. The manual may not be reproduced, stored, transmitted or translated in any form or by means of any medium - in whole or in part - without prior written permission.

4.4 Start-up steps 39
5 Parameters 40
5.1 Safety instructions for dealing with parameters 40
5.2 General information on parameters 40
5.2.1 Explanation of operating modes 40
5.2.2 Structure of the parameter tables 44
5.3 Application parameters 45
5.3.1 Basic parameters 45
5.3.2 Preset speed mode 51
5.3.3 Motorized potentiometer 52
5.3.4 PID process controller 53
5.3.5 Analogue inputs 56
5.3.6 Digital inputs 58
5.3.7 Analogue output 59
5.3.8 Digital outputs 60
5.3.9 Relay 61
5.3.10 External fault 63
5.3.11 Motor current limit 63
5.3.12 Stall detection 64
5.4 Performance parameters 65
5.4.1 Motor data 65
5.4.2 I^2T 68
5.4.3 Switching frequency 69
5.4.4 Controller data 69
5.4.5 Squared characteristic 72
6 Error detection and troubleshooting 72
6.1 List of the LED flash codes for error recognition 73
6.2 List of errors and system errors 74
7 Technical data 77
7.1 General data 77
8 Optional accessories 78
8.1 Adapter plates 79
8.1.1 Motor adapter plates 79
8.1.2 Motor adapter plates (specific) 81
8.1.3 Wall adapter plates (standard) 81
8.2 MMI manual control unit including a 3 m RJ11 connection cable on an M12 plug 83
8.3 PC communication cable USB on M12 plug (converter RS485/RS232 integrated) 83
9 Guidelines, Norms and Standards 83
9.1 EMV limit classes 83
9.2 Classification acc. to IEC/EN 61800-3 84
9.3 Standards and guidelines 84
9.4 Required markings for UL 85
9.5 Quickstart guide 86

ATTENTION!

Non-observance can result in material being damaged and can affect the function of the drive control.

Supplemental information on operating the drive control.

- Action: This symbol indicates that you have to perform an action. The required actions are described step by step.
- ➢ This symbol indicates the result of an action.

1.2 Qualified staff

In the context of this operating manual and the notes relating to the product itself, qualified staff refers to electronic specialists that are familiar with the installation, assembly, start-up and operation of the drive control and with the dangers involved, and whose specialist training and knowledge of relevant standards and regulations provide them with the necessary abilities.

1.3 CE marking

With the CE marking, we as the manufacturer of the device confirm that the drive control meets the basic requirements of the following guidelines:

- Directive on Electromagnetic Compatibility (Directive 2004/108/EC of the Council)
- Low Voltage Directive (Directive 2006/95/EC of the Council)

You will find the declaration of conformity for download on www.kostal.com/industrie.

1.4 Safety instructions

The following warnings, precautionary measures and comments are provided for your safety and serve to prevent damage to the drive control and the components connected to it. This chapter contains warnings and notes that are generally applicable when handling drive controls. They are separated into general information, transport & storage, start-up, operation, repair and dismantling & disposal.

Specific warnings and comments that apply to specific activities are placed at the start of the appropriate chapters and are repeated and enhanced at different critical points within these chapters.

ATTENTION!

This operating manual must be accessible near the device and available to all users.

ATTENTION!

Please read these safety instructions and warnings before installation and start-up; this also applies to all warning signs attached to the device. Make sure that the warning signs are legible and replace missing or damaged signs.

1.4.2 Transport & storage

ATTENTION!

Risk of damaging the drive control.

If the notes are not observed, the drive control could be damaged and destroyed during subsequent start-up.

- Proper and safe operation of the drive control requires proper storage, set-up and assembly as well as careful operation and maintenance.
  The drive control must be protected from mechanical jolts and vibrations during transport and storage. Protection from impermissible temperatures (see technical data) must also be guaranteed.

1.4.4 Operation

⚠ **WARNING**

Danger of injury due to electric shocks or restarting motors.

Non-observance of warnings can result in serious injury or damage.

- Observe the following instructions during operation:
  - The drive control works with high voltages.
  - When electrical devices are operated, some parts of them are always subject to dangerous voltage.
  - Emergency off equipment according to DIN EN 60204-1; VDE 0113-1:2007-06 has to be functional in all operating modes of the control device. Resetting the emergency stop equipment may not result in uncontrolled or undefined restarting.
  - In order to ensure safe disconnection from the mains, the mains cable has to be all-pole disconnected from the drive control.
  - Certain parameter settings can result in the drive control restarting automatically after the supply voltage has failed.

ATTENTION!

Risk of damaging the drive control.

If the notes are not observed, the drive control could be damaged and destroyed during subsequent start-up.

- Observe the following instructions during operation:
  - The motor parameters, especially the I^2T settings, have to be configured properly to provide proper motor overload protection.
  - The drive control contains internal motor overload protection. See P0610 (level 3) and P0335. I^2T is ON by default. Motor overload protection can also be ensured via an external PTC.
  - The drive control may not be used as "Emergency-off equipment" (see DIN EN 60204-1; VDE 0113-1:2007-06).
  - Drive controls are maintenance-free if operated properly. If the air contains dust, the cooling fins of the motor and drive control have to be cleaned regularly.

1.5 Proper use

If the device is installed in a machine, converters may not be started up (i.e. intended operation may not begin) until it has been determined that the machine complies with the regulations in EC Directive 2006/42/EC (machine directive); DIN EN 60204-1; VDE 0113-1:2007-06 must be observed.

Start-up (i.e. beginning intended operation) is only permitted if the EMV Directive (2004/108/EC) is complied with.

The harmonised standards of series DIN EN 50178; VDE 0160:1998-04 have to be applied for this drive control along with DIN EN 60439-1; VDE 0660-500:2005-01.

This drive control may not be operated in areas where there is a danger of explosion.

Repairs may only be performed by authorised repair bodies. Independent and unauthorised intervention can result in death, injury and damage. The warranty provided by KOSTAL will be invalidated in this case.

External mechanical loads such as stepping on the housing are not permitted.

Using drive units in equipment that is not fixed is considered as an exceptional environmental condition and is only permitted if allowed by the standards and guidelines applicable on site.

1.6 Responsibility

As a basic principle, electronic devices are not fail-proof. The operator and/or the contractor setting up the machine or system is responsible for ensuring that the drive is moved to a safe state if the device fails.

Section "Electrical equipment of machines" in DIN EN 60204-1; VDE 0113-1:2007-06, "Safety of machinery" describes the safety requirements for electric control units. These are provided for the safety of persons and machines, and in order to retain the functional capability of the machine or system; they have to be observed.

The function of an emergency-off feature does not have to result in the power supply for the drive being switched off. In order to prevent danger, it can be useful to keep individual drives in operation or initiate specific safety procedures. The performance of emergency-off measures is evaluated by

2 Overview of the drive control

This chapter contains information on the scope of delivery for the drive control and the function description.

2.1 Model description

Article name KOSTAL "INVEOR"

INV MA 4 0,55 L00A00 G00000 S00 000 1

1 2 3 4 5 6 7 8 9

Fig. 1: Article description

Key	
1 Drive control series: **INVEOR** 2 Installation location/installation size: **M** – integrated into a motor, installation size: **A**, B, C, D	6 Housing: **G0** - standard (black with inscription); **0** – standard (cooling element); **0** – standard (with potentiometer); **00** – standard screw connections
	7 Firmware version: **S00** – standard
3 Input voltage: **4** – 400 V	8 Versions: **000** – standard; **001** – specific
4 Recommended motor power: **0.55**; 0.75; 1.1; 1.5; 2.2; 3; 4; 5.5; 7.5; 11; 15; 18.5; 22 kW	9 Equipment generation: **1** – current version
5 Printes circuit board: **L00** – standard (without brake chopper); **A00** – standard (without TTL evaluation); **–** standard (without field bus)	

2.3 Description of the INVEOR drive control

The INVEOR drive control is a device for speed control in three-phase a.c. motors.

The drive control can be integrated in the motor (with the standard adapter plate) or close to the motor (with the wall installation adapter plate).

The permitted ambient temperatures specified under Technical data refer to operation at nominal load. In many cases of application, higher temperatures may be permitted after a detailed technical analysis. These have to be approved by KOSTAL for each individual case.

3 Installation

3.1 Safety instructions during installation

⚠ **WARNING**

- Installation may be performed only be appropriately qualified employees who are trained in the set-up, installation, start-up and operation of the product. Work performed on the drive control by unqualified staff and non-observance of warnings can result in serious injury or damage.
- The device must be grounded in accordance with DIN EN 61140; VDE 0140, NEC and other relevant standards. Mains connections must be hardwired.

3.2.2 Suitable installation location for the motor integrated drive control

- Ensure that the motor with a motor integrated drive control is only installed and operated if aligned as shown in the following image.

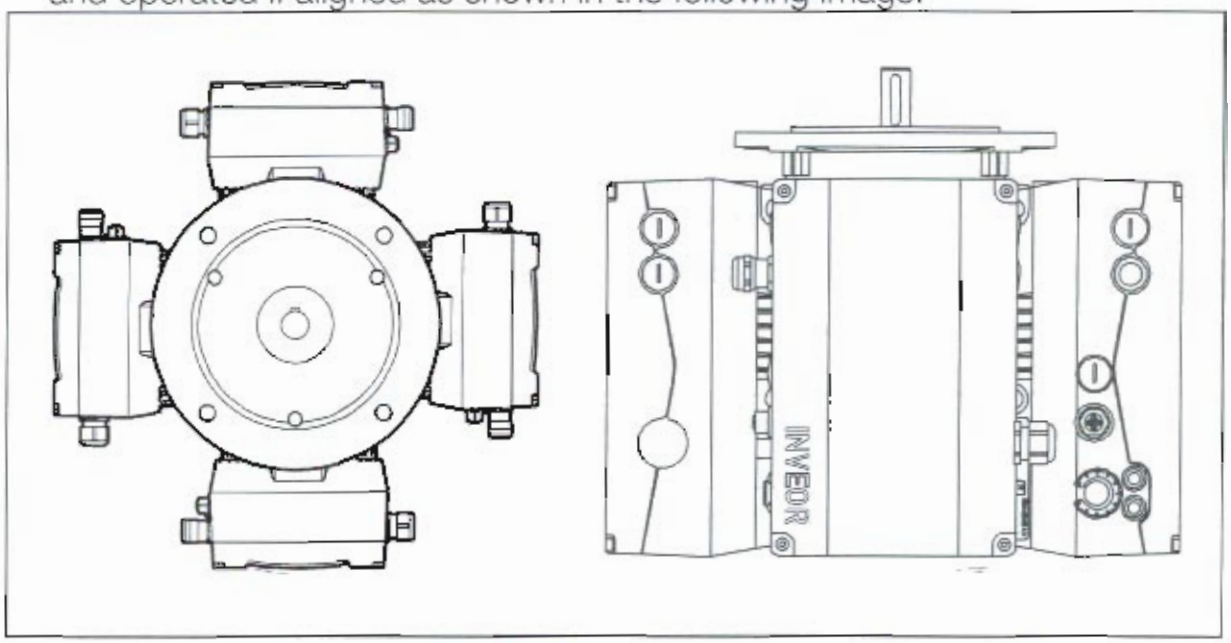

Fig. 3: Motor installation location/permitted alignments

3.2.3 Basic connection versions

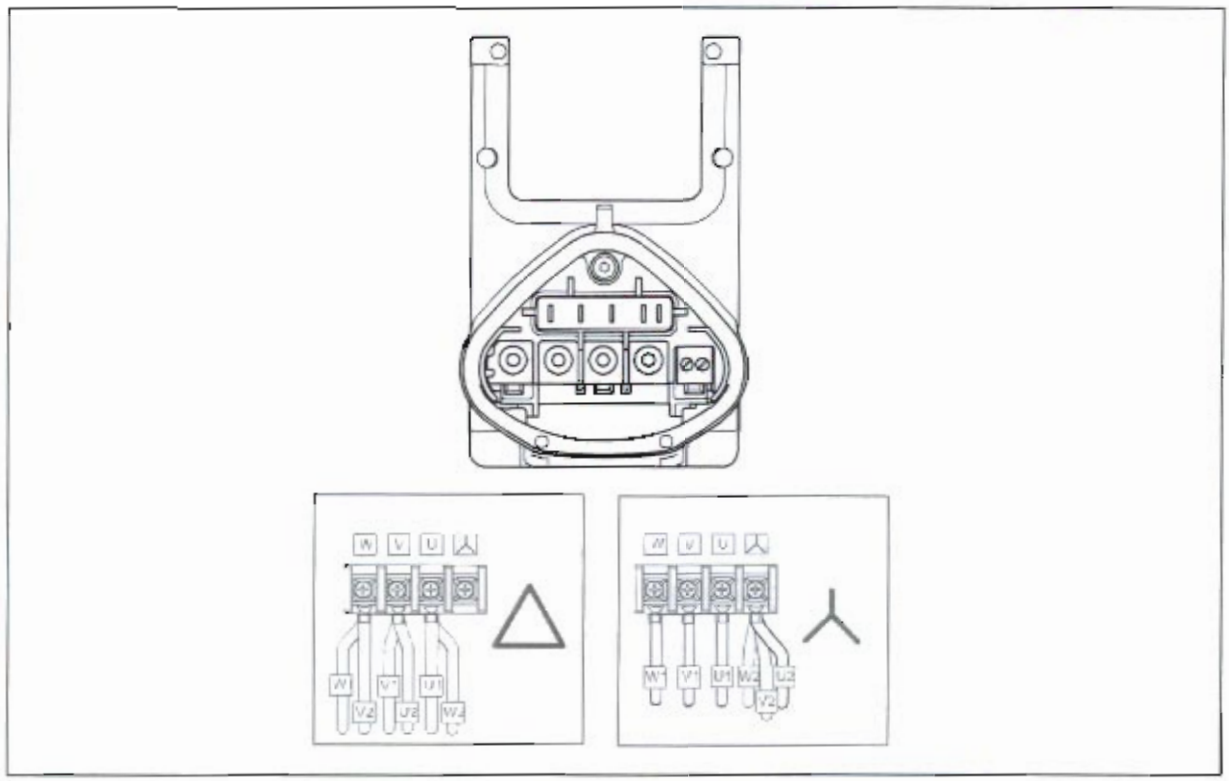

Fig. 4: Star or triangle connection for drive controls integrated in the motor

3.2.5 Wiring instructions

The control connections of the application card are located inside the drive control.
The configuration can vary, depending on the version.

Terminals:	Plug terminal clamp with activation button (slot screwdriver, max. width 2.5 mm)
Connection cross-section: AWG 14	0.5 to 1.5 mm^2, single-wire, AWG 20 to
Connection cross-section: AWG 14	0.75 to 1.5 mm^2, fine-wired, AWG 18 to
Connection cross-section:	0.5 to 1.0 mm^2, fine-wired, (core end sleeves with and without plastic collar)
Length of stripped insulation:	9 to 10 mm

3.2.6 Preventing electromagnetic interferences

Screened lines should be used for control circuits where possible. The screening should be applied to the line end with special care without laying the leads across longer stretches without screening.

Screening for analogue target values should only be applied on one side of the drive control.
In principle, control lines should always be laid as far away from power-conducting lines; it may be necessary to use separate ducts. If lines do cross, they should do so at an angle of 90°.

Upstream circuit elements, such as protector switches and brake coils, or circuit elements that are operated via the outputs of the drive control have to be interference-suppressed. RC circuits are suitable as a.c. voltage protector switches, while free-wheeling diodes or varistors are usually used as dc voltage protector switches. These interference suppression devices are attached directly to the protector switch coils. Power supply for a mechanical brake may not be carried in the same cable.

Power connections between the drive control and the motor should always be screened or reinforced, and the screening has to have large-scale grounding at both ends. The use of EMV cable screw connections is recommended. These are not part of the scope of delivery.

Wiring suitable for EMV must be ensured.

The contractor starting up the device is responsible for complying with the protection category when sealing the adapter plate on the motor.
In case of questions, please contact your usual KOSTAL contact person.

6. Place the seal (3).
7. Lead the motor connection line past the connection terminal and through the adapter plate; attach the adapter plate to the motor with the four fastening bolts (4) (torque: 2.0 Nm).
8. Attach the engine wires in the correct circuit, see also Fig. 4. (torque: 3,0 Nm).

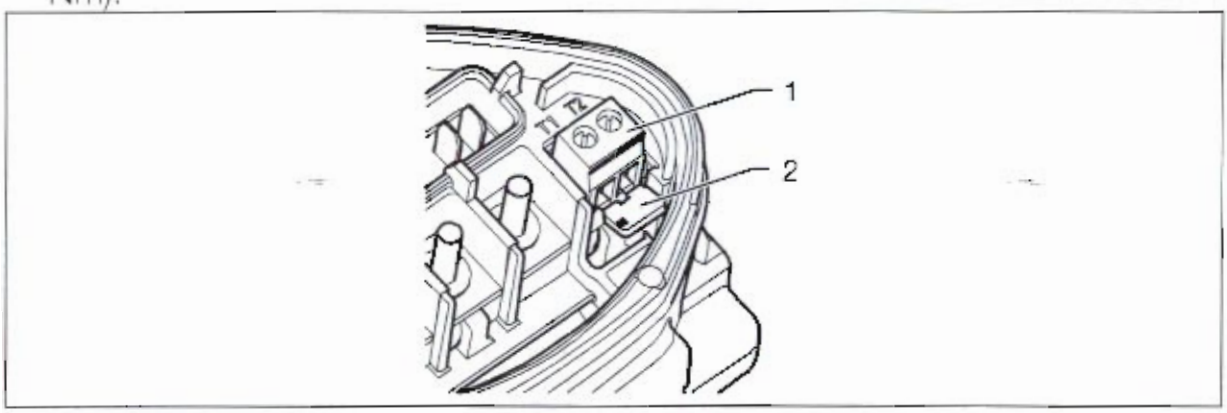

Fig. 6: Electric jumper

9. If a motor PTC/Klixxon is available, wire the connection cables to terminals T1 and T2 (1) (torque: 0.6 Nm).

Make sure during assembly that the connection cables are not trapped.

If the motor has a temperature sensor, this has to be connected to terminals T1 and T2 (1); this requires that the electric jumper (2) fitted in the delivery state has to be removed.
If the electric jumper is installed, the temperature of the motor will not be monitored.

10. Plug the drive control onto the adapter plate and fasten it evenly using the four lateral bolts (torque: 4.0 Nm).

3.3.3 Connections for brake resistor

Terminal no.	Designation	Configuration
1	B+	Connection for brake resistor (+)
2	B–	Connection for brake resistor (-)

Tab. 3: Optional terminal configuration for brake chopper

3.3.4 Control connections

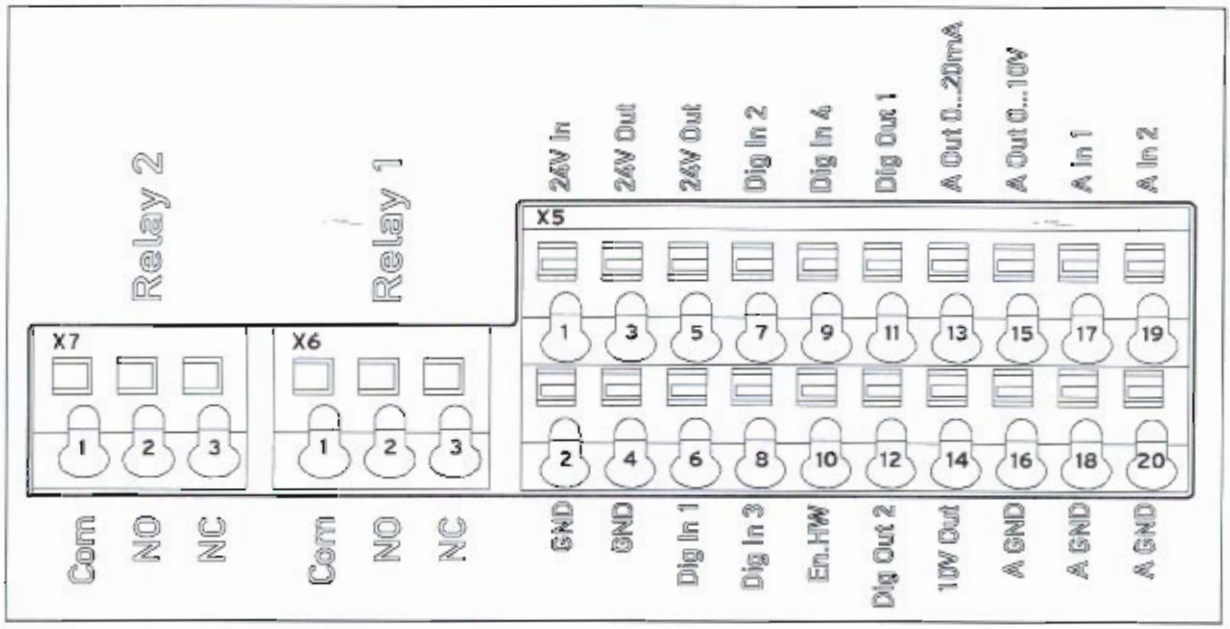

Fig. 8: Control connections

ATTENTION

Danger of external signals being coupled in.

Use only screened control lines.

- Guide the required control lines into the housing through the cable screw connections.
- Connect the control lines according to the figure and/or table. Use screened control lines.
- Place the cover on the housing of the drive control and bolt it (torque: 2.0 Nm) tight.

Terminal no.	Designation	Configuration
1	COM	Centre contact relay 1
2	NO	Closing contact relay 1
3	NC	Opening contact relay 1

Tab. 5: Terminal configuration X6 (relay 1)

In the factory setting, relay 1 is programmed as "relay error" (parameter 4.190).

Terminal no.	Designation	Configuration
1	COM	Centre contact relay 2
2	NO	Closing contact relay 2
3	NC	Opening contact relay 2

Tab. 6: Terminal configuration X7 (relay 2)

In the factory setting, "no function" is allocated to relay 2 (parameter 4.210).

The drive control is operational after the 400 V power supply has been switched on. Alternatively, the drive control can be started up by connecting an external 24 V power supply.
The settings required for this are described in the "System parameters" chapter. A detailed description of the functions of the drive control can be found in the parameter description (www.kostal.com/industrie).

The following figure shows the assembly dimensions and the free spaces required for installing the drive control.

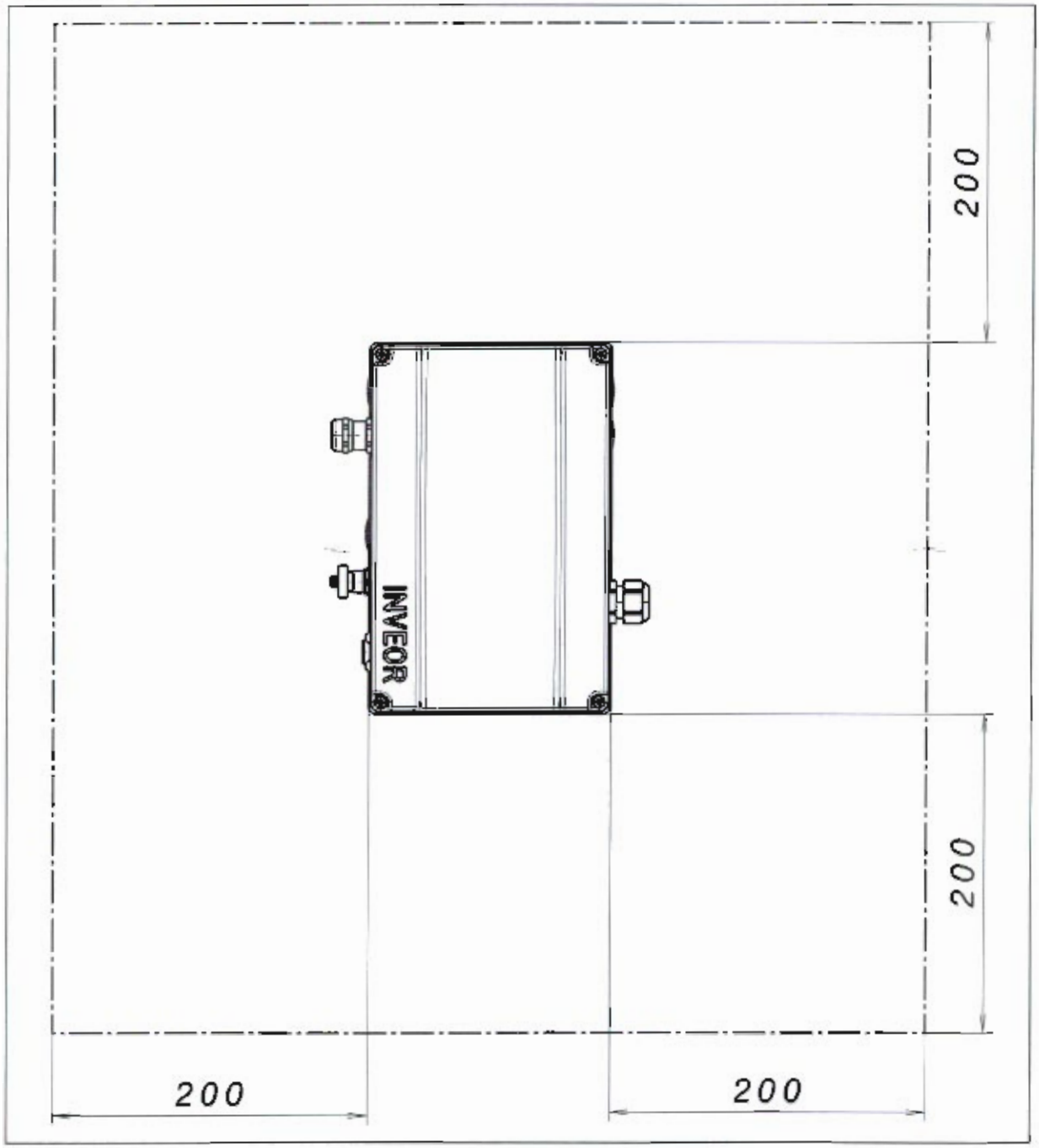

Fig. 10: Minimum clearances

For the "wall mounting" version, the line length between the motor and INVEOR may not exceed 5 m. A screened cable with the required cross-section must be used. There must be a PE connection (underneath the wall mounting's terminal board)!

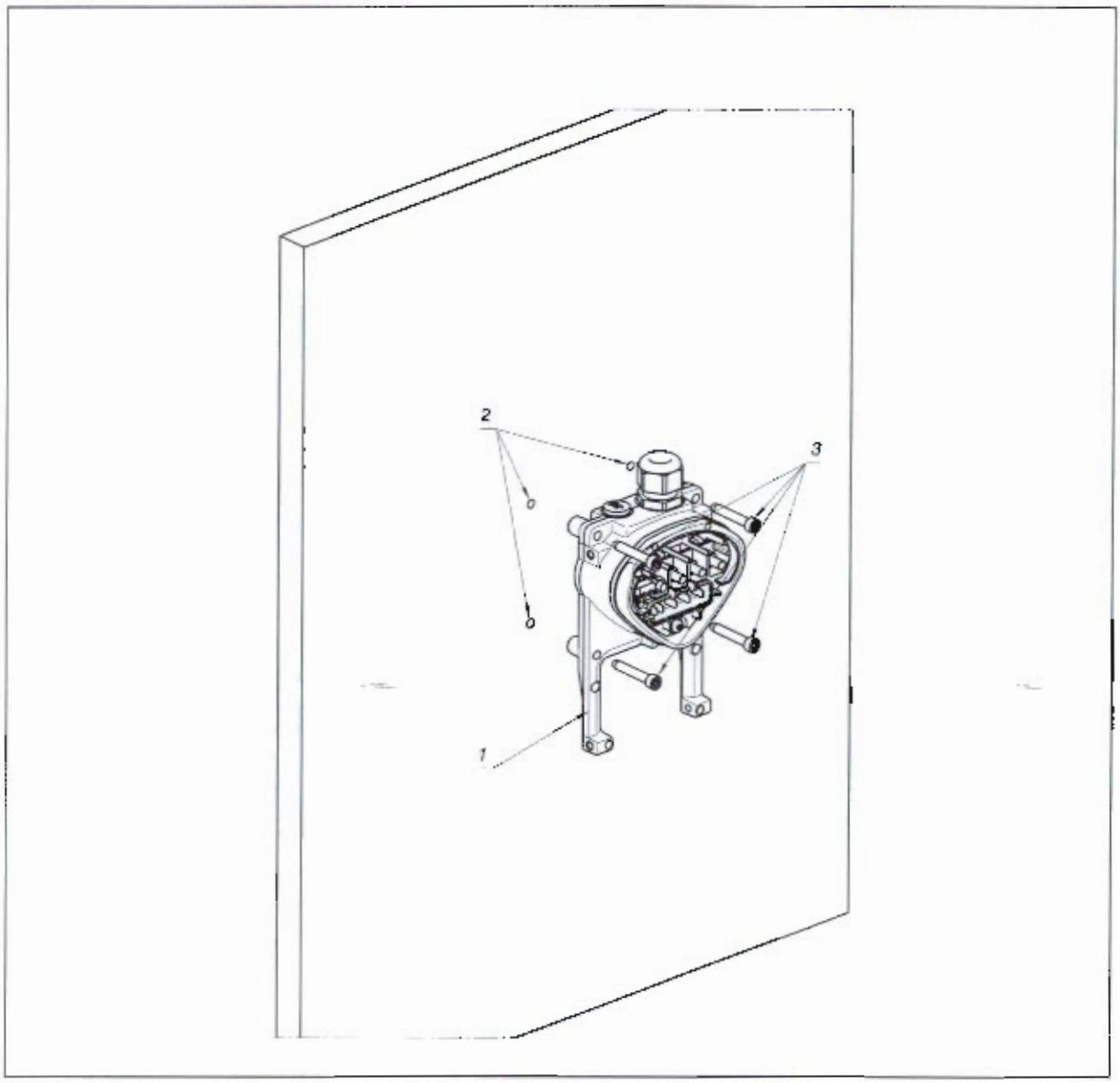

Fig. 12: Fastening the adapter plate to a wall

⚠ **DANGER!**

The drive control may not be installed without an adapter plate!

- Find a position that meets the required ambient conditions as described in the "Installation requirements" section.
- To achieve optimum self-convection of the drive control, ensure that the (EMC) screw connection is facing upwards when installing.
- Without any additional ventilation for the INVEOR (optional for BG C), it is only permitted to be installed vertically.

5. Wire the motor cable to contacts U, V, W (and star point in some cases) in the connection terminal, as described in the "Basic connection versions" chapter. Use cable shoes (M5) to do this.
6. Before connecting an available motor PTC to the T1 and T2 terminals, remove the preassembled short-circuit bridge (2).
   The motor PTC is potential-free after connecting the INVEOR, therefore it must be connected using a separate motor lead.
   Replace the dummy screw with a suitable standard screw connection and guide both ends to T1 and T2.

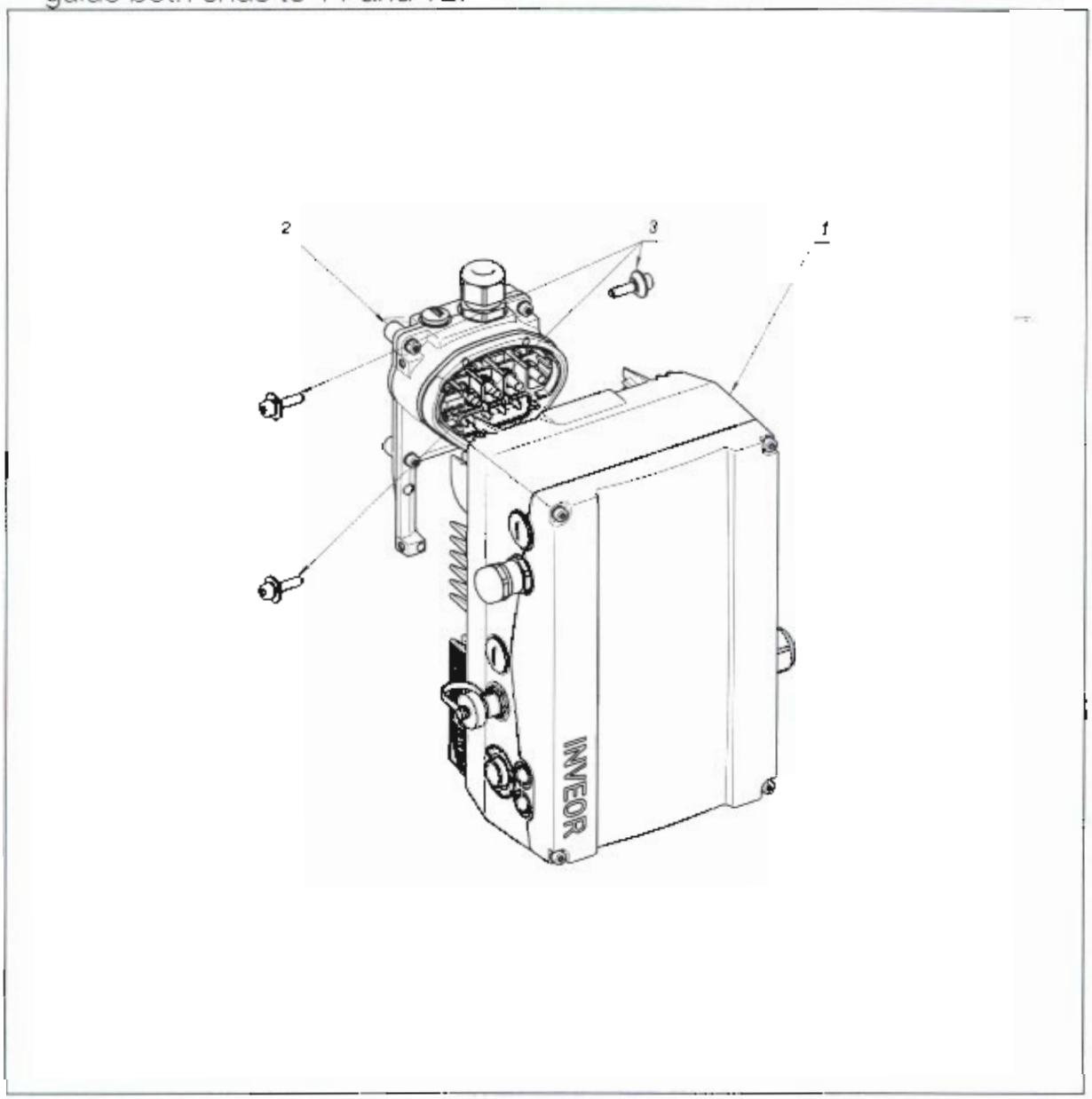

Fig. 14: Attaching the drive control

7. Position the drive control (1) on the adapter plate (2) so that the collar of the adapter dips into the opening on the floor of the cooling element.
8. Fasten the control unit to the adapter plate with the help of the screws (3) provided (torque: 4.0 Nm).

4 Commissioning

4.1 Safety instructions during commissioning

ATTENTION!

Danger of damage

If the notes are not observed, the drive control could be damaged and destroyed during subsequent start-up.

- Commissioning may only be performed by qualified staff. Safety precautions and warnings must always be observed.

⚠ WARNING

Danger of injury

Non-observance of warnings can result in serious injury or damage.

- Make certain that the power supply provides the correct voltage and is designed for the required current.
- Use suitable circuit breakers with the prescribed nominal current between the mains and the drive control.
- Use suitable fuses with appropriate current values between the mains and the drive control (see technical data).
- The drive control must be grounded with the motor according to regulations. Non-compliance can result in serious injury.

4.3 Block diagram

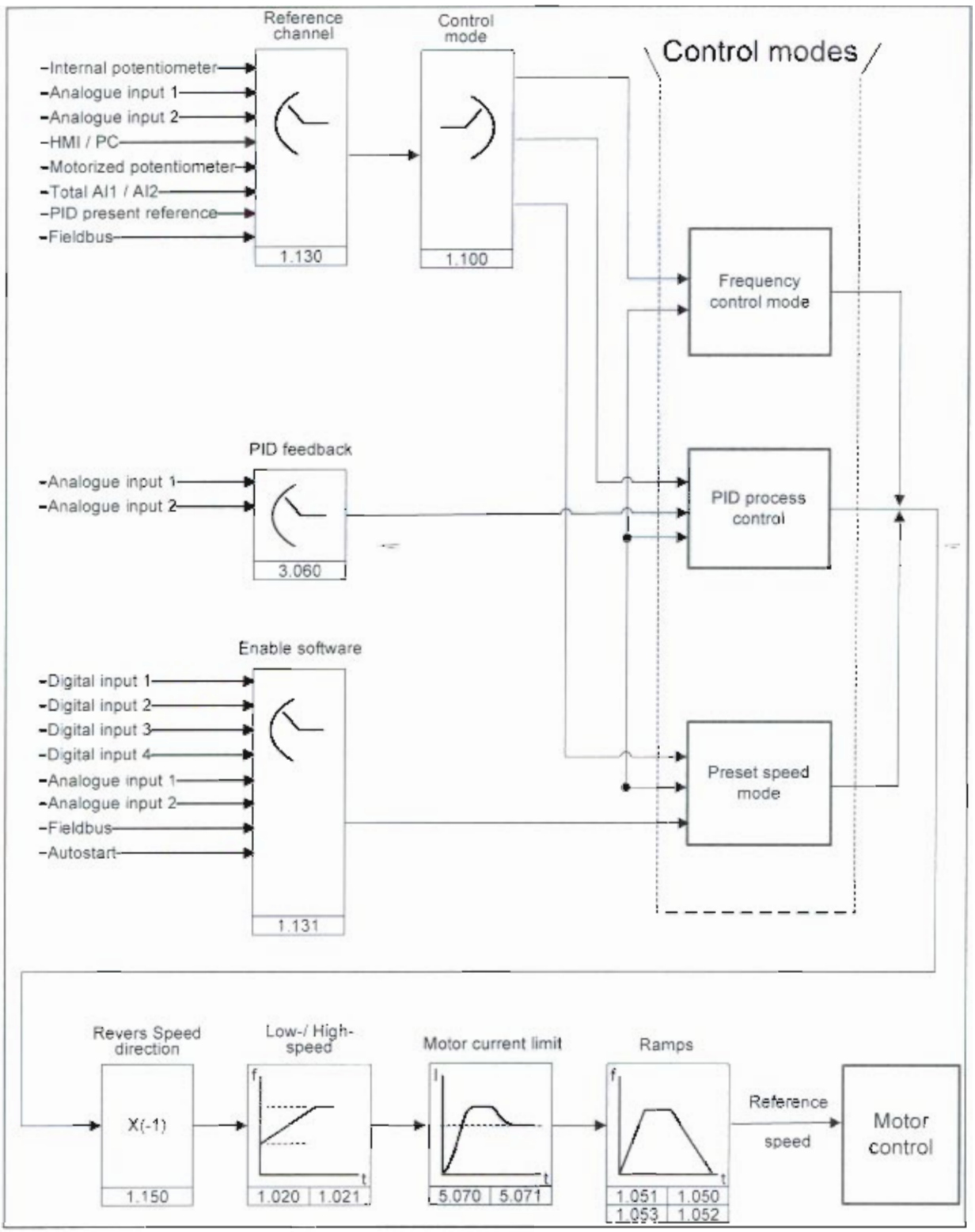

Fig. 17: General structure of target value generation

5 Parameters

This chapter contains the following:

- An introduction to the parameters
- An overview of the most important start-up and operation parameters

5.1 Safety instructions for dealing with parameters

⚠ **WARNING**

Danger of injury due to restarting motors.

Non-observance can result in serious injury or damage.

- Certain parameter settings and the changing of parameter settings during operation can result in the INVEOR drive control restarting automatically after the supply voltage has failed, or in undesirable changes in the operating behaviour.

If parameters are changed while the device is in operation, it may take a few seconds until the effect becomes noticeable.

5.2 General information on parameters

5.2.1 Explanation of operating modes

The operating mode is the instance in which the reference is generated. In case of the frequency setting mode, this is a simple conversion of the raw input reference into a rotation speed reference; in the case of PID process control, the reference and feedback are compared and then a control to a specific process variable is performed.

Frequency setting mode:

The references from the "reference channel" (1,130) are rescaled into frequency reference. 0% is the "low speed" (1,020), 100% is the "high speed" (1,021).
The plus or minus sign of the reference is the decisive factor in rescaling.

Stand-by function in PID process control:

This function can provide energy savings in applications such as booster stations where PID process control is used to control to a specific process value and the pump has to run on a "minimum frequency" (1,020). As the inverter can reduce the rotation speed of the pump in normal operation when the process variable is reducing, but is never able to fall below the "minimum frequency" (1,020), this provides the opportunity of stopping the engine if it is running during a waiting time, the "PID stand-by time" (3,070) with the "minimum frequency" (1,020).

Once the reference diverges from the set % value, the "PID stand-by hysteresis" (3,071), the control (the motor) is started again.

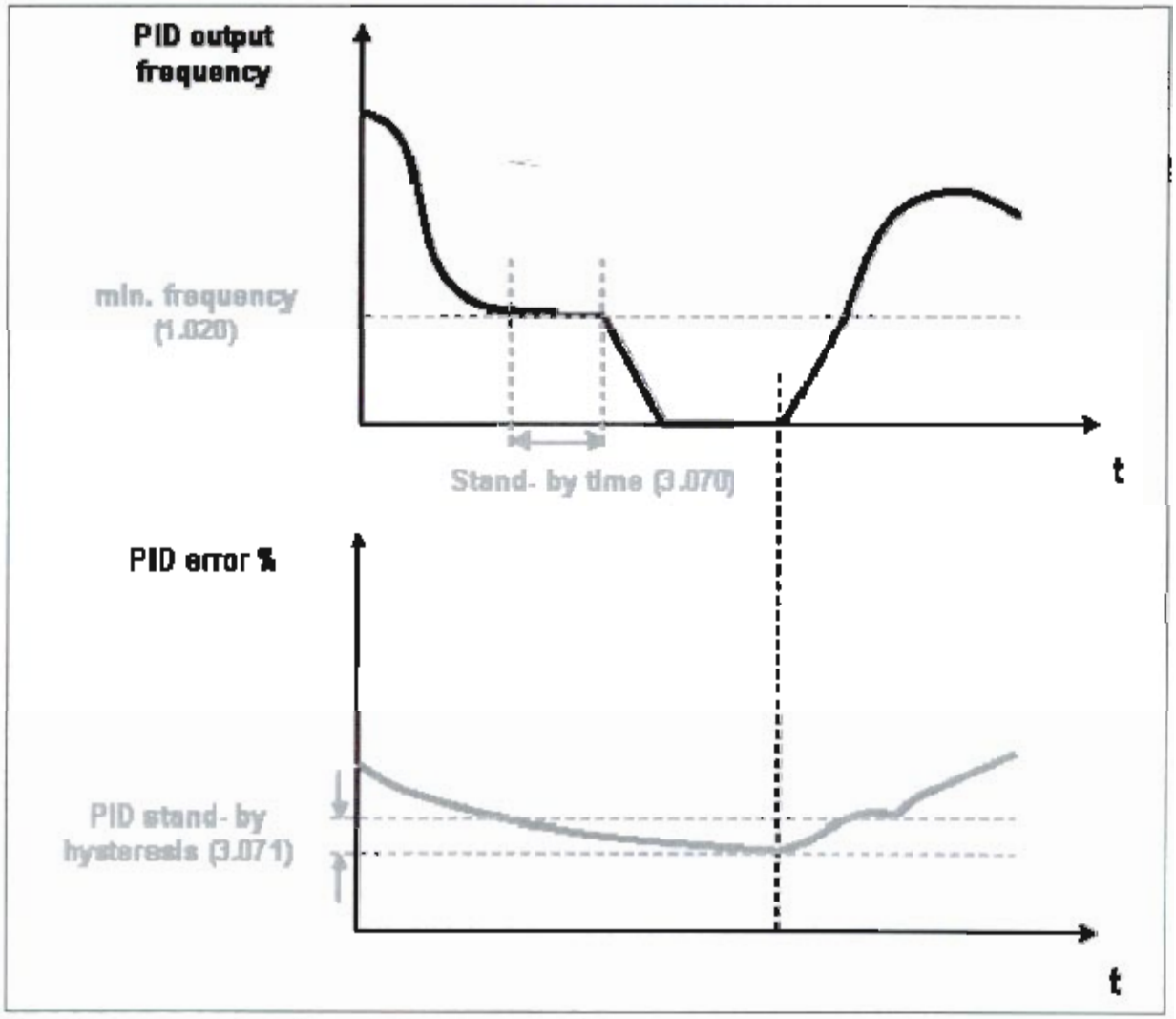

Fig. 19: Stand-by function in PID process control

5.2.2 Structure of the parameter tables

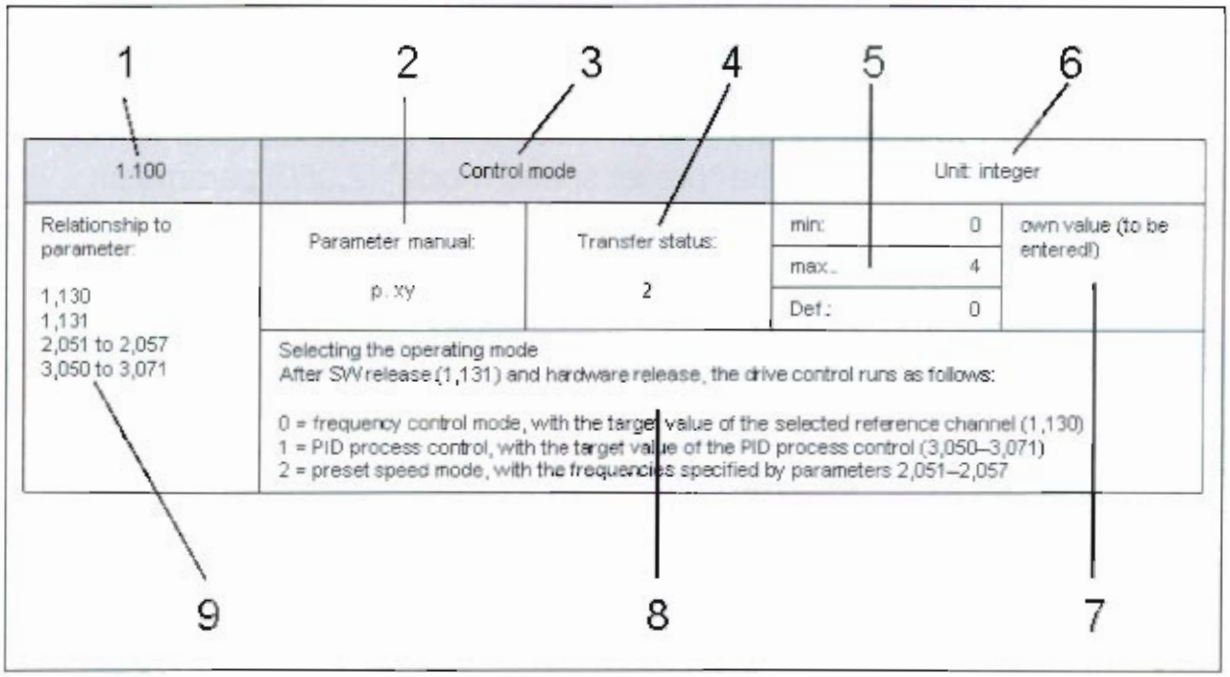

Fig. 20: Example for a parameter table

Key	
1 Parameter numbers	6 Unit
2 Description in the parameter manual on page ...	7 Field for entering an own value
3 Parameter name	8 Explanation of the parameter
4 Transfer status 0 = switch drive control off and on for transfer 1 = set hardware release again 2 = during operation	9 There are further parameters that relate to these parameters
5 Value range (from – to – factory setting)	

1.051	Acceleration 1		Unit: s	
Relationship to parameter: 1,021 1,054	Parameter manual: p. xy	Transfer status: 2	min: 0,1 max.: 1000 def.: 5	own value (**to be entered!**)
	Acceleration 1 is the time that the inverter takes to speed up from 0 Hz to the high speed. The acceleration time can be increased through certain circumstances, e.g. if the drive control is overloaded.			

1.052	Deceleration 2		Unit: s	
Relationship to parameter: 1,021 1,054	Parameter manual: p. xy	Transfer status: 2	min: 0,1 max.: 1,000 def.: 10	own value (**to be entered!**)
	Deceleration 2 is the time that the inverter takes to brake to 0 Hz from the high speed (1,021). If the set deceleration time cannot be reached, the fastest possible deceleration time is implemented.			

1.053	Acceleration 2		Unit: s	
Relationship to parameter: 1,021 1,054	Parameter manual: p. xy	Transfer status: 2	min: 0,1 max.: 1,000 def.: 10	own value (**to be entered!**)
	Acceleration 2 is the time that the inverter takes to speed up from 0 Hz to the high speed. The acceleration time can be increased through certain circumstances, e.g. if the drive control is overloaded.			

1.130	Reference channel		Unit: integer	
Relationship to parameter: 3,062 to 3,069	Parameter manual: p. xy	Transfer status: 2	min: 0 max.: 10 def.: 0	own value (**to be entered!**)
	Determines the source from where the reference is to be read. 0 = internal potentiometer 1 = analogue input 1 2 = analogue input 2 3 = MMI/PC 6 = motorizes potentiometer 7= total analogue inputs 1 and 2 8 = PID present reference mode (3,062) 9 = fieldbus 10 = reference from INVEOR Soft-PLC			

1.131	Enable software		Unit: integer	
Relationship to parameter: 1,132 1,150 2,050 4,030 4,050	Parameter manual: p. xy	Transfer status: 2	min: 0 max.: 11 def.: 0	own value (**to be entered!**)
	⚠ WARNING The motor may start immediately, depending on the change made. Selection of the source for the control release. 0 = digital input 1 1 = digital input 2 2 = digital input 3 3 = digital input 4 4 = analogue input 1 (has to be selected in parameter 4.030) 5 = analogue input 2 (has to be selected in parameter 4.050) 6 = fieldbus 8 = digital input 1 right / digital input 2 left 1,150 must be set to "0" 9 = autostart: 10 = INVEOR Soft-PLC 11 = preset frequency input (all inputs which are selected in parameter 2,050) The motor may start immediately if hardware is enabled (En.Hw. Fig. 8) and a reference have been provided. This cannot be prevented even with parameter 1,132.			

1.180	Reset		Unit: integer	
Relationship to parameter: 1,181 1,182	Parameter manual: p. xy	Transfer status: 2	min: 0 max.: 4 def.: 4	own value (**to be entered!**)
	Selection of the source for error confirmation. Errors can only be confirmed once the error has been removed. Some errors can only be confirmed by switching the control off and then on again, see list of errors. Auto-confirmation via parameter 1,181. 0 = no manual confirmation possible 1 = rising shoulder at digital input 1 2 = rising shoulder at digital input 2 3 = rising shoulder at digital input 3 4 = rising shoulder at digital input 4			

1.181	Automatic reset		Unit: s	
Relationship to parameter: 1,180 1,182	Parameter manual: p. xy	Transfer status: 2	min: 0 max.:1,000,000 def.: 0	own value (**to be entered!**)
	Next to the reset function (1,180), an automatic reset can be selected. 0 = no automatic confirmation > 0 = time for automatic reset of error in seconds			

1.182	Quantity of automatic reset		Unit:	
Relationship to parameter: 1,180 1,181	Parameter manual: p. xy	Transfer status: 2	min: 0 max.: 500 def.: 5	own value (**to be entered!**)
	Next to the automatic reset (1,181), it is possible to limit the number of maximum automatic resets here. 0 = no restriction of automatic confirmations > 0 = number of maximum permitted automatic confirmations			

5.3.3 Motorized potentiometer

This mode must be selected in the parameter 1.130. This function can be used as a source of target values for the frequency setting mode as well as for the PID process controller.

2.150	MOP digital Input		unit: integer	
Relationship to Parameter: 1,130 4,030 4,050	Parameter manual: p. xy	Transfer status: 2	min: 0 max.: 7 def.: 3	Own value (to be entered!)
	Selection of the source for increasing and reducing the target value 0 = Digital In 1 + / Digital In 2 - 1 = Digital In 1 + / Digital In 3 - 2 = Digital In 1 + / Digital In 4 - 3 = Digital In 2 + / Digital 3 - 4 = Digital In 2 + / Digital In 4 - 5 = Digital In 3 + / Digital In 4 - 6 = Analogue In 1 + / Analogue In 2 - (must be selected in parameter 4,030 / 4,050) 7 = reference from customer PLC			

2.151	MOP step range		Unit: %	
Relationship to parameter: 1.020 1.021	Parameter manual: p. xy	Transfer status: 2	min: 0 max.: 100 def.: 1	Own value (**to be entered!**)
	Increments at which the target value changes per keystroke.			

2.152	MOP step time		Unit: s	
Relationship to parameter:	Parameter manual: p. xy	Transfer status: 2	min: 0.02 max.: 1000 def.: 0.04	Own value (**to be entered!**)
	Indicates the time in which the target value totals up for permanent signal.			

3.052	PID derivative gain		Unit: s	
Relationship to parameter: 1,100 1,130	Parameter manual: p. xy	Transfer status: 2	min: 0 max.: 100 def.: 0	own value (**to be entered!**)
	differential share of PID controller			

3.060	PID feedback		Unit: integer	
Relationship to parameter: 1,100 1,130 3,061	Parameter manual: p. xy	Transfer status: 2	min: 0 max.: 3 def.: 0	own value (**to be entered!**)
	Selection of the input source from which the feedback for the PID process controller is imported: 0 = analogue input1 1 = analogue input2			

3.061	PID inverted		Unit: integer	
Relationship to parameter: 3,060	Parameter manual: p. xy	Transfer status: 2	min: 0 max.: 1 def.: 0	own value (**to be entered!**)
	The source of the feedback (parameter 3,060) is inverted 0 = disable 1 = enable			

3.062 to 3.068	PID present reference		Unit: %	
Relationship to parameter: 1,130 3,069	Parameter manual: p. xy	Transfer status: 2	min: 0 max.: 100 def.: 0	own value (**to be entered!**)
	The PID present reference depending on the switching patterns are to be issued at the digital inputs 1 – 3 specified in parameter 3,069 (has to be selected in parameter 1,130).			

5.3.5 Analogue inputs

For analogue inputs 1 and 2 (AIx display AI1/AI2)

4.020/4.050	AIx reference type		Unit: integer	
Relationship to parameter:	Parameter manual: p. xy	Transfer status: 2	min: 0 max.: 1 def.: 1	own value (**to be entered!**)
	Function of analogue inputs 1/2: 1 = voltage input 2 = current input			

4.021/4.051	AIx minimum input		Unit: %	
Relationship to parameter:	Parameter manual: p. xy	Transfer status: 2	min: 0 max.: 100 def.: 0	own value (**to be entered!**)
	Specifies the minimum value of the analogue inputs as a percentage of the final area value. Example: 0...10 V or 0...20 mA = 0%...100% 2...10 V or 4...20 mA = 20%...100%			

4.022/4.052	AIx maximum input		Unit: %	
Relationship to parameter:	Parameter manual: p. xy	Transfer status: 2	min: 0 max.: 100 def.: 100	own value (**to be entered!**)
	Specifies the maximum value of the analogue inputs as a percentage of the final area value. Example: 0...10 V or 0...20 mA = 0%...100% 2...10 V or 4...20 mA = 20%...100%			

4.023/4.053	AIx dead time		Unit: %	
Relationship to parameter:	Parameter manual: p. xy	Transfer status: 2	min: 0 max.: 100 def.: 0	own value (**to be entered!**)
	Dead time in percentage of the final area value of the analogue inputs.			

4.034/4.064	AIx physical minimum		Unit:	
Relationship to parameter: 4,033/4,063 4,035/4,065	Parameter manual: p. xy	Transfer status: 2	min:-10,000 max.:+10,000 def.: 0	own value (**to be entered!**)
	Selection of the lower limit of a physical value to be displayed.			

4.035/4.065	AIx physical maximum		Unit:	
Relationship to parameter: 4,033/4,063 4,034/4,064	Parameter manual: p. xy	Transfer status: 2	min:-10,000 max.:+10,000 def.: 100	own value (**to be entered!**)
	Selection of the upper limit of a physical value to be displayed.			

5.3.6 Digital inputs

4.110 to 4.113	DIx inverted		Unit: integer	
Relationship to parameter:	Parameter manual: p. xy	Transfer status: 2	min: 0 max.: 1 def.: 0	own value (**to be entered!**)
	This parameter can be used to invert the digital input. 0 = disable 1 = enable			

5.3.8 Digital outputs

For digital outputs 1 and 2 (DOx display DO1/DO2)

4.150/4.170	DOx function		Unit: integer	
Relationship to parameter: 4,151/4,171 4,152/4,172	Parameter manual: p. xy	Transfer status: 2	min: 0 max.: 50 def.: 0	own value (**to be entered!**)
	Selection of the process value to which the output should switch. 0 = not allocated / INVEOR Soft-PLC 1= intermediate circuit voltage 2= supply voltage 3= motor voltage 4= motor current 5= actual frequency 6= – 7= – 8= IGBT temperature 9= interior temperature 10= error (NO) 11= inverted error (NC) 12= final release levels 13= digital input1 14= digital input 2 15= digital input 3 16= digital input 4 17= ready for operation 18= ready 19= operation 20= ready for operation + ready 21= ready for operation + ready + operation 22= ready + operation 23 = motor power 24 = torque 25 = field bus 50 = motor current limit active			

4.151/4.171	DOx on		Unit:	
Relationship to parameter: 4,150/4,170	Parameter manual: p. xy	Transfer status: 2	min: 0 max.:1,000,000 def.: 0	own value (**to be entered!**)
	If the set process value exceeds the switch-on limit, the output is set to 1.			

4.191/4.211	Rel.x on		Unit:	
Relationship to parameter: 4,190/4,210	Parameter manual: p. xy	Transfer status: 2	min: 0 max.:1000000 def.: 0	own value (**to be entered!**)
	If the set process value exceeds the switch-on limit, the output is set to 1.			

4.192/4.212	Rel.x off		Unit:	
Relationship to parameter: 4,190/4,210	Parameter manual: p. xy	Transfer status: 2	min: 0 max.:1000000 def.: 0	own value (**to be entered!**)
	If the set process value exceeds the switch-on limit, the output is set to 1.			

4.193/4.213	Rel.x on delay		Unit:	
Relationship to parameter: 4,194/4,214	Parameter manual: p. xy	Transfer status: 2	min: 0 max.: 99 def.: 0	own value (**to be entered!**)
	Specifies the length of the switch-on delay.			

4.194/4.214	Rel.x off delay		Unit:	
Relationship to parameter: 4,193/4,213	Parameter manual: p. xy	Transfer status: 2	min: 0 max.: 99 def.: 0	own value (**to be entered!**)
	Specifies the length of the switch-off delay.			

The dimming is performed by a PI controller that works in dependence on the current difference.
The entire function can be deactivated by setting the "motor current limit in %" parameter (5,070) to zero.

5.070	Motor current limit		Unit: %	
Relationship to parameter: 5,071 33,031	Parameter manual: p. xy	Transfer status: 2	min: 0 max.: 250 def.: 0	own value (**to be entered!**)
	0 = deactivated			

5.071	Motor current limit		Unit: s	
Relationship to parameter: 5,070 33,031	Parameter manual: p. xy	Transfer status: 2	min: 0 max.: 100 def.: 1	own value (**to be entered!**)

5.3.12 Stall detection

5.080	Stall detection		Unit: integer	
Relationship to parameter: 5,081	Parameter manual: p. xy	Transfer status: 2	min: 0 max.: 1 def.: 0	own value (**to be entered!**)
	This parameter can be used to activate stall detection. 0 = disable 1 = enable			

5.081	Blocking time		Unit: s	
Relationship to parameter: 5,080	Parameter manual: p. xy	Transfer status: 2	min: 0 max.: 50 def.: 2	Own value (**to be entered!**)
	Indicates the time after which a blockage is detected.			

33.032	Motor power		Unit: W	
Relationship to parameter:	Parameter manual: p. xy	Transfer status: 1	min: 0 max.: 680 def.: 0	own value (**to be entered!**)
	A performance value [kW] $P_{M,N}$ has to be set here that corresponds to the motor power.			

33.034	Motor speed		Unit: rpm	
Relationship to parameter: 34,120	Parameter manual: p. xy	Transfer status: 1	min: 0 max.:10,000 def.: 0	own value (**to be entered!**)
	The value from the motor's type plate data has to be entered here for the nominal motor rotation speed $n_{M,N}$.			

33.035	Motor frequency		Unit: Hz	
Relationship to parameter:	Parameter manual: p. xy	Transfer status: 1	min: 40 max.: 100 def.: 0	own value (**to be entered!**)
	This is where the nominal motor frequency $f_{M,N}$ is set.			

33.050	Stator resistance		Unit: Ohm	
Relationship to parameter:	Parameter manual: p. xy	Transfer status: 1	min: 0 max.: 30 def.: 0,001	own value (**to be entered!**)
	The stator resistance can be optimised here, if the automatically determined value (motor identification) is insufficient.			

5.4.2 I²T

33.010	I²T fact. motor		Unit: %	
Relationship to parameter: 33,031 33,011	Parameter manual: p. xy	Transfer status: 2	min: 0 max.: 150 def.: 100	own value (**to be entered!**)
	The percental current threshold (in relation to motor current 33,031) at the start of integration can be set here.			

33.011	I²T time		Unit: s	
Relationship to parameter: 33,010	Parameter manual: p. xy	Transfer status: 2	min: 0 max.: 30 def.: 25	own value (**to be entered!**)
	Time after which the drive control switches off with I²T.			

33.138	Holding current time		Unit: s	
Relationship to parameter: 33,010	Parameter manual: p. xy	Transfer status: 2	min: 0 max.: 120 def.: 2	own value (**to be entered!**)
	This is the time span during which the drive is held with continuous current after the brake ramp has been completed.			

34.011	Type of encoder		Unit: integer	
Relationship to parameter: 34,010 34,012 34,013	Parameter manual: p. xy	Transfer status: 2	min: 0 max.: 2 def.: 0	Own value (**to be entered!**)
	Selection of the type of sensor 0 = inactive 1 = TTL sensor 2 = HTL sensor ⚠ WARNING When selecting the HTL sensor, 24V is transmitted via the interface. If using a TTL sensor, this could result in damage to the sensor.			

34.012	Encoder line count		Unit: integer	
Relationship to parameter: 34,010 34,011 34,013	Parameter manual: p. xy	Transfer status: 2	min: 0 max.: 10000 def.: 1024	Own value (**to be entered!**)
	Selection of the line count of the sensor used.			

34.013	Encoder offset		Unit: °	
Relationship to parameter: 34,010 34,011 34,012	Parameter manual: p. xy	Transfer status: 2	min: 0 max.: 360 def.: 0	Own value (**to be entered!**)
	An encoder offset for the sensor can be set here.			

34.021	Flying restart		Unit:	
Relationship to parameter:	Parameter manual: p. xy	Transfer status: 1	min: 0 max.: 1 def.: 1	own value (**to be entered!**)
	This parameter is used to activate the capture function. 0 = disable 1 = enable			

6.2 List of errors and system errors

When an error occurs, the converter is switched off; you can find the corresponding error numbers in the flash code table or the PC tool.

Error messages can only be confirmed once the error has been remedied.

Error messages can be confirmed as follows:
- digital input (programmable)
- via the MMI (manual operating unit)
- auto confirmation (parameter 1,181, page 38)
- switching the device off and on
- via field bus (CANOpen, Profibus DP, EtherCAD)

The following section contains a list of possible error messages.
Please contact the KOSTAL service department if you notice errors that are not listed here.

No.	Error name	Description of fault	Possible cause/remedy
1	Undervoltage 24 V application	Supply voltage for the application is lower than 15 V	Overload of the 24 V supply
2	Overvoltage 24 V application	Supply voltage for the application is greater than 31 V	Internal 24 V supply is not OK or external supply is not OK
8	Communication application<>power	Internal communications between the application plate and the power-conducting plate is not OK	EMV interferences
10	Parameter distributor	The internal distribution of parameters during initialisation failed	Parameter set is incomplete
13	Cable break at analogue in 1 (4–20 mA / 2–10 V)	Current or voltage are lower than the lower limit of analogue input 1 (this error monitoring is activated automatically by setting parameter 4,021 to 20% and 4,022 to 100%)	Cable brake, faulty external sensor
14	Cable break at analogue in 2 (4–20 mA / 2–10 V)	Current or voltage are lower than the lower limit of analogue input 2 (this error monitoring is activated automatically by setting parameter 4,021 to 20% and 4,022 to 100%)	Cable brake, faulty external sensor

5.4.5 Squared characteristic

34.120	Squared characteristic		Unit: integer	
Relationship to parameter: 34,121	Parameter manual: p. xy	Transfer status: 2	min: 0 max.: 1 def.: 0	own value (**to be entered!**)
	The quadratic characteristic curve function can be activated here. 0 = disable 1 = enable			

34.121	Flux compensation		Unit: %	
Relationship to parameter: 34,120	Parameter manual: p. xy	Transfer status: 2	min: 0 max.: -100 def.: 50	own value (**to be entered!**)
	The percentage by which the flux is to be reduced can be set here.			

6 Error detection and troubleshooting

This chapter contains the following:

- A list of the LED flash codes for error recognition
- A description of error recognition using PC tools
- A list of errors and system errors
- Notes on error detection with the MMI

⚠ WARNING

Danger injury and danger of electric shock.

Non-observance of warnings can result in serious injury or damage.

- Repairs to the device may only be performed by the KOSTAL Service department.
- Damaged parts or components have to be replaced with parts from the appropriate list of spare parts.
- The frequency converter has to be disconnected prior to opening, assembly or disassembly.

No.	Error name	Description of fault	Possible cause/remedy
		converter	
46	Motor parameters	Plausibility check for motor parameters failed	Parameter set not OK
47	Drive control parameters	Plausibility check for drive control parameters failed	Parameter set not OK
48	Type plate data	No motor data were entered.	Please enter the motor data according to the rating plate
49	Power-class restriction	Max overload of the drive control exceeded for more than 60 sec.	Check application / reduce load / dimension larger drive control

Tab. 9: Error detection

Designation	Function
Digital inputs 1–4	- Switching level low < 5 V / high > 15 V - Imax (at 24 V) = 3 mA - Rin = 8.6 kOhm
Analogue inputs 1, 2	- In +/- 10 V or 0–20 mA - In 2–10 V or 4–20 mA - Resolution 10 Bit - Rin = 10 kOhm
Digital outputs 1, 2	- Short-circuit proof - Imax = 20 mA
Relays 1, 2	1 changeover contact (NO/NC) maximum switching power *: - at ohmic load (cos φ = 1): 5 A at ~230 V or = 30 V - under inductive load (cos φ = 0.4 and L/R = 7 ms): 2 A at ~230 V or = 30 V Maximum reaction time: 7 ms ± 0.5 ms Electric life: 100,000 switching cycles
Analogue output 1 (current)	- Short-circuit proof - Iout = 0.20 mA - burden = 500 ohm
Analogue output 1 (voltage)	- Short-circuit proof - Uout = 0..10 V -Imax = 10 mA
Power supply 24 V	- Auxiliary voltage U = 24V DC - short-circuit proof - Imax = 100 mA - external feeding of 24 V possible
Power supply 10 V	- Auxiliary voltage U = 10 V DC - short-circuit proof - Imax = 30 mA

Tab. 11: Specification of interfaces

* in terms of the UL 508C standard, the maximum allowed is 2 A!

8 Optional accessories

This chapter contains brief descriptions of the following optional accessories

- Adapter plates
- Manual control unit MMI including connection cable RJ11 on plug M12
- Brake resistors

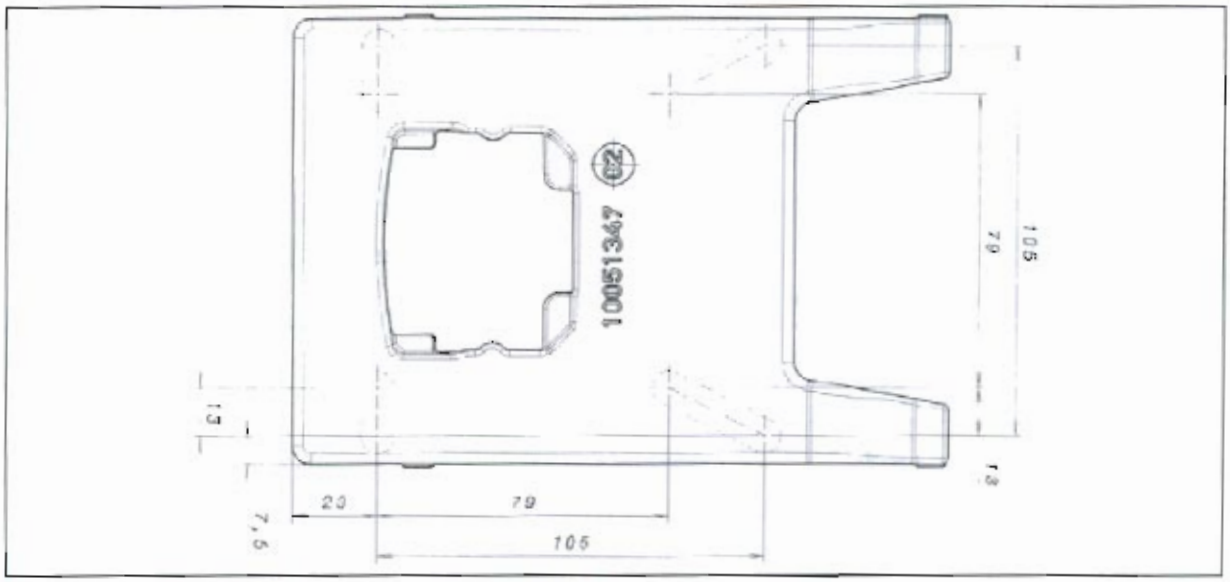

Fig. 22: Hole pattern for BG B standard adapter plate

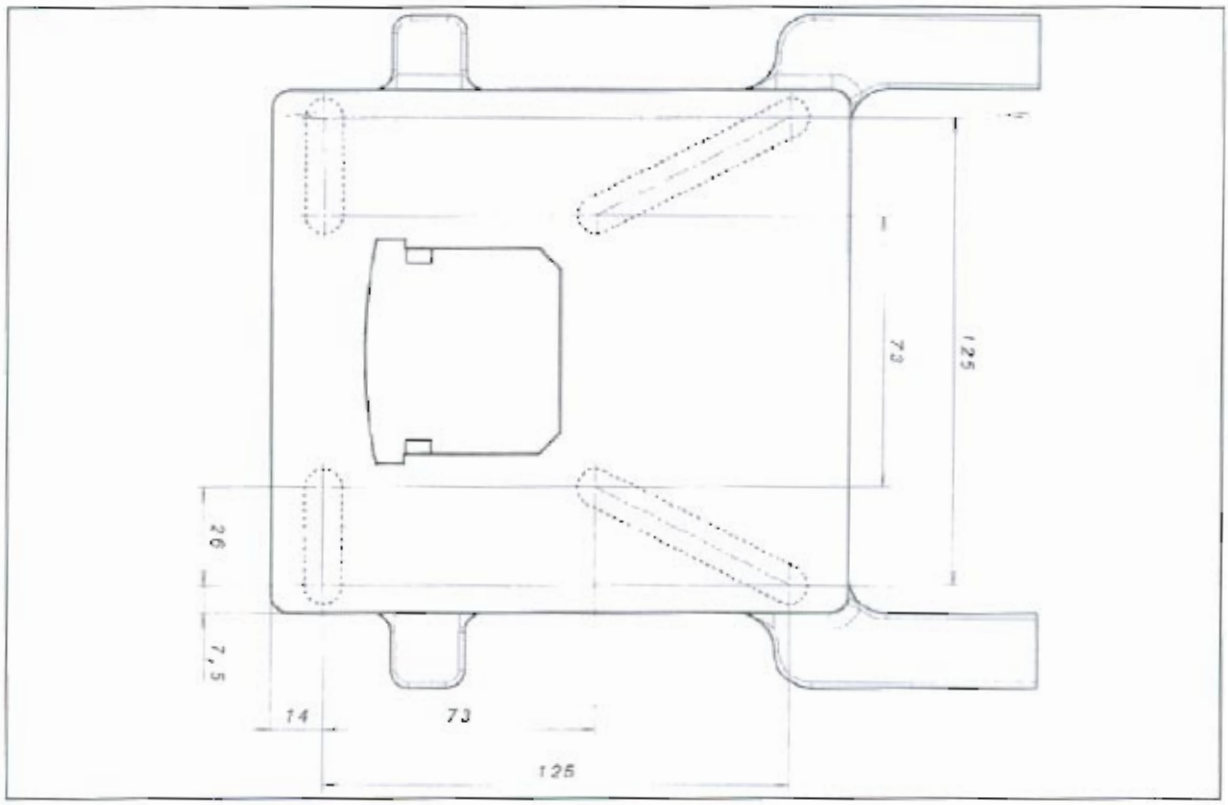

Fig. 23: Hole pattern for BG C standard adapter plate

When using raised-cylindrical head screws (cf. DIN 912 / DIN 6912) or flat head screws (cf. DIN EN ISO 7380), the hole pattern must be drilled in compliance with the applicable drawing on the INVEOR mounting frame. The drill-hole centres should be on the respective centre lines of the slots illustrated on the diagram.

If the mounting frame is to be attached to a connection box that has no square hole pattern, then the drawing's diagonal centre lines are decisive.

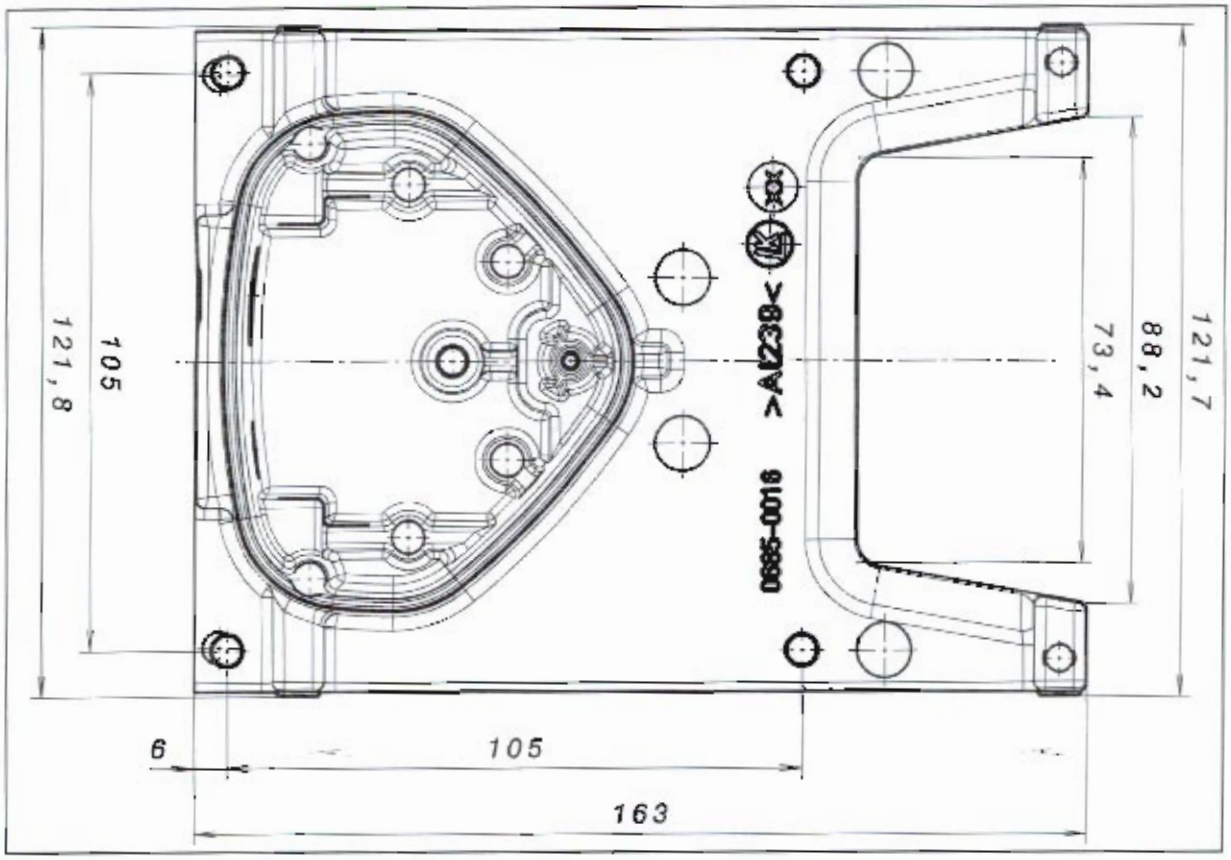

Fig. 25: Hole pattern for BG B standard wall adapter plate

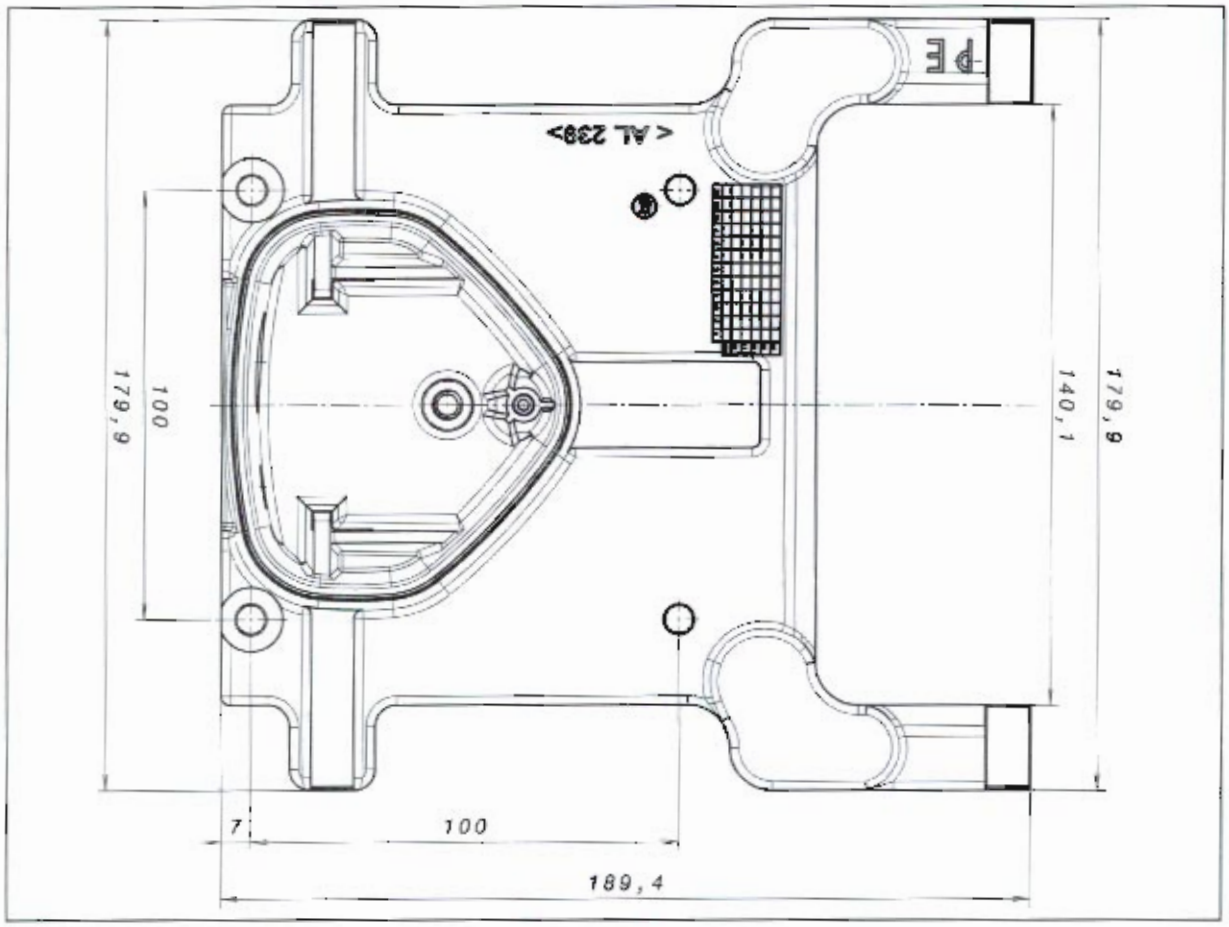

Fig. 26: Hole pattern for BG C standard wall adapter plate

9.2 Classification acc. to IEC/EN 61800-3

The generic standard defines test procedures and severity levels for every environment of the drive control category; these have to be complied with.

Definition of the environment

First environment (residential, commercial and industrial area):

All "areas" that are directly supplied by a public low voltage connection, such as:

- Residential area, e.g. houses, apartments etc.
- Retail area, e.g. shops, supermarkets
- Public institutions, e.g. theatres, stations
- Outside areas, e.g. petrol stations and parking areas
- Light industry, e.g. workshops, laboratories, small businesses

Second environment (industry):

Industrial surroundings with their own supply network that is separated from the public low-voltage supply by a transformer.

9.3 Standards and guidelines

The following specifically apply:

- Directive on Electromagnetic Compatibility
  (Directive 2004/108/EC of the Council EN 61800-3:2004)
- Low Voltage Directive
  (Directive 2006/95/EC of the Council EN 61800-5-1:2003)
- Product standards list

9.5 Quickstart guide

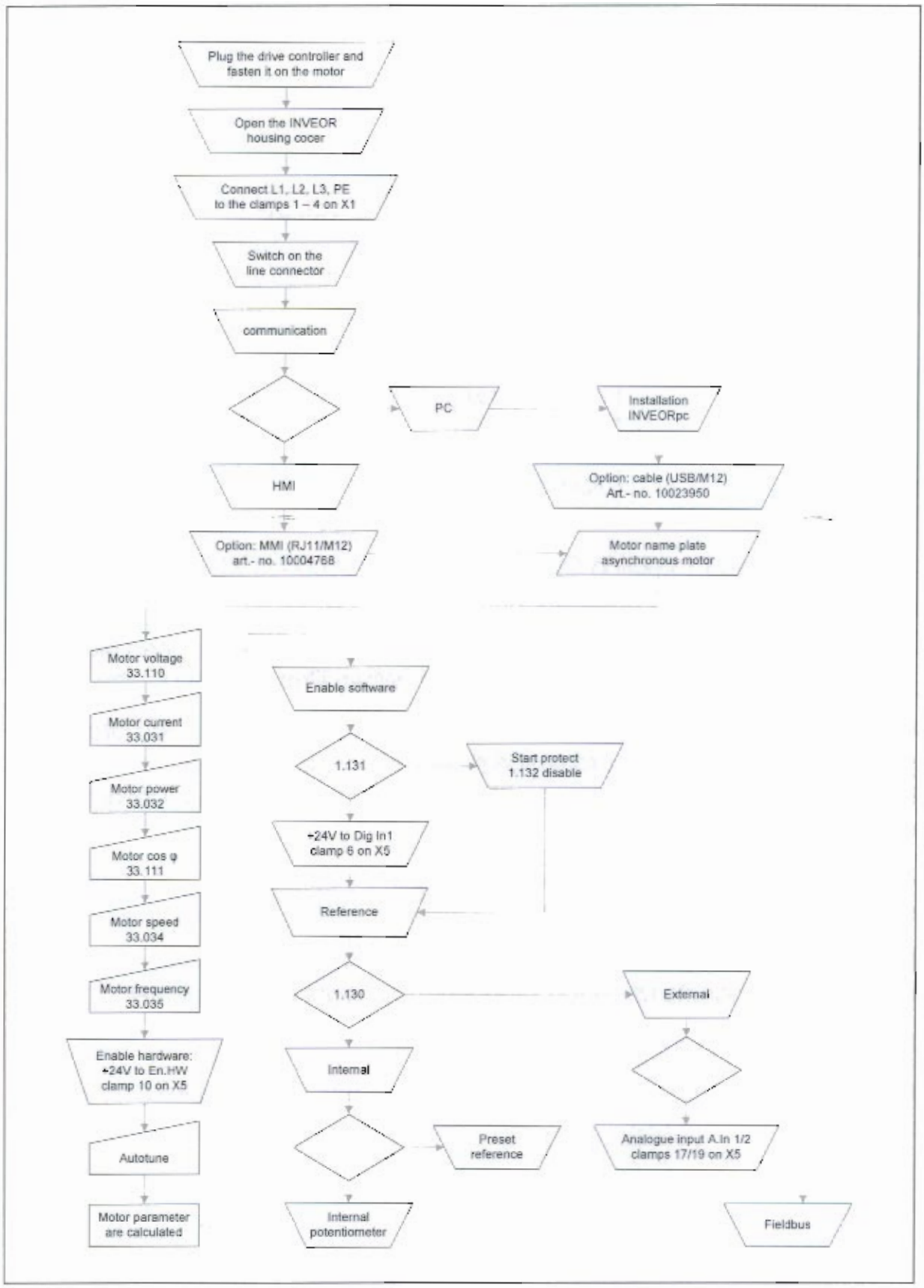

Fig. 27: Startup diagram

Proper use 14

Q

Quantity of automatic reset 50

R

Reference channel 47, 48
Regulations 14
Relay 28, 61
Repairs 13, 72
Reset 50
Rotation speed 27, 63, 66
Rotational direction 49

S

Safety instructions 8
Standards 84
Start protect 49
Stator inductance 65, 67
Stator resistance 66
Storage 10
Switching frequency 69
System errors 74

T

Technical data 77
  mains frequency 77
  mains voltage 77
  network configurations 77
Terminal cross-section 22
Transport 10
Type of protection 24, 77

U

Undervoltage 74, 75

W

Weight 77
Wiring instructions 22

Klübersynth UH1 6 oils

Synthetic gear and high-temperature oils for the food-processing and pharmaceutical industries

KLÜBER LUBRICATION

Description:

Klübersynth UH1 6 oils are gear and high-temperature oils on a polyglycol basis.

They comply with the German law governing foodstuffs and associated ancillaries (LMBG, §5/1) and meet the requirements set forth in the Guidelines of Sec. 21 CFR 178.3570 of FDA regulations. These oils comply with the USDA H1 requirements

Klübersynth UH1 6 oils meet the CLP requirements; in the FZG Four Square Gear Oil Tester acc. to DIN 51 354, pt. 2, A/8.3/90, these oils achieve a scuffing load stage of > 12 and a specific change in weight < 0.2 mg/kWh. In the enhanced FZG test A/16.6/90 the Klübersynth UH1 6 oils with a viscosity ISO VG 220 or higher had a scuffing load stage of > 12. Klübersynth UH1 6 oils offer corrosion protection, ageing and oxidation resistance, shear stability as well as high-temperature stability.

Application:

Klübersynth UH1 6 oils were especially developed for the lubrication of worm gears with steel/bronze pairings. Due to the special polyglycol base oils and additives, these oils reduce friction and wear considerably.

Klübersynth UH1 6 oils are also suitable for the lubrication of bevel and spur gears including machine elements such as plain and rolling bearings, especially when exposed to high temperatures.

Furthermore, they can be used to lubricate lifting, drive and transport chains.

Application notes:

Klübersynth UH1 6 oils can be applied by immersion, immersion circulation and injection.

Klübersynth UH1 6 oils are **not** miscible with mineral oils and synthetic hydrocarbons. We recommend cleaning the lubrication points or rinsing gears or closed systems with the Klübersynth UH1 6 oil which will be used after conversion.

Especially with a view to the H1 requirements in the food-processing industry, any mixing of Klübersynth UH1 6 oil with non-food-grade lubricants should be avoided.

Klübersynth UH1 6 oils are neutral towards ferrous metals and almost all nonferrous metals. There may be increased wear when the contact surfaces of design elements made of aluminium or aluminium alloys are exposed to dynamic loads (sliding speed and high loads). If necessary, preliminary tests should be carried out.

For permanent temperatures at the seal edge up to 100 °C, NBR seals (acrylonitrile-butadiene rubber) may be used. For higher temperatures, it is safer to use FKM seals (fluorinated rubber) instead.

It should be noted that elastomers from the one or several manufacturers can behave differently.

Klübersynth UH1 6 oils

- Synthetic high-temperature and gear oils
- Comply with USDA H1
- Wide operating temperature range
- Reduce friction
- Good wear protection
- Excellent ageing and oxidation stability
- Fulfill or exceed CLP requirements

Therefore, the data given in the "compatibility with elastomers" table should be used for reference purposes only. A compatibility test should always be carried out with the elastomers which are actually used.

We recommend using two-component paints (reaction paints). Oil gauge glasses should preferably be made of natural glass or polyamide materials.

The suitability of design materials and paints in contact with Klübersynth UH1 6 oils should be tested, especially prior to series application.

Viscosity selection for rolling bearings:

To select the correct oil viscosity observe the bearing manufacturer's instructions or refer to worksheet 3 from the Society of Tribology (GfT).

Klübersynth UH1 6 oils

Synthetic gear and high-temperature oils for the food-processing and pharmaceutical industries

When determining the correct viscosity for gears, the manufacturer's instructions take priority. Only in cases where there are no gear manufacturer's instructions, the viscosity can be selected in accordance with the enclosed worksheet "Klübersynth UH1 6 oils – selection of oil viscosity for gears".

Service temperature range:*

For immersion lubrication of gears and chains

Klübersynth UH1 6-150
approx. – 35 °C to approx. 160 °C
Klübersynth UH1 6-220
approx. – 30 °C to approx. 160 °C
Klübersynth UH1 6-320/460
approx. – 25 °C to approx. 160 °C
Klübersynth UH1 6-680
approx. – 20 °C to approx. 160 °C

When applied via automatic systems, the manufacturer's instructions on the max. viscosity have to be observed.

Minimum shelf life:

The minimum shelf life is approx. 36 months if the product is stored in the original closed container in a dry place.

Pack sizes:

20 l canister
200 l drum

Product data:

	Klübersynth UH1 6-150	Klübersynth UH1 6-220	Klübersynth UH1 6-320	Klübersynth UH1 6-460	Klübersynth UH1 6-680
ISO VG DIN 51 519	150	220	320	460	680
Density, DIN 51 757, at 20 °C, g/ml, approx.	1.05	1.05	1.05	1.05	1.05
Kinematic viscosity, DIN 51 562, pt. 1 at 20 °C, mm^2/s, approx. at 40 °C, mm^2/s, approx. at 100 °C, mm^2/s, approx.	 420 150 30	 600 220 40	 900 320 55	 1300 460 80	 1900 680 110
Viscosity index, DIN ISO 2909	≥ 210	≥ 220	≥ 220	≥ 240	≥ 250
Flash point, DIN ISO 2592, °C	> 280	> 280	> 280	> 280	> 270
Pour point, DIN ISO 3016, °C	≤ – 35	≤ – 35	≤ – 30	≤ – 30	≤ – 25

Compatibility with elastomers:

	Klübersynth UH1 6-150	Klübersynth UH1 6-220	Klübersynth UH1 6-320	Klübersynth UH1 6-460	Klübersynth UH1 6-680
towards 72 NBR 902, at 100 °C / 168 h change in volume % approx. change in hardness (Shore A) approx.	 3 – 2	 – 2 1	 – 3 3	 – 3 3	 – 3 3
towards 75 FKM 585, at 150 °C / 168 h change in volume % approx. change in hardness (Shore A) approx.	 1 1	 1 1	 1 1	 1 1	 1 1

* Service temperatures are guide values which depend on the lubricant's composition, the intended use and the application method. Lubricants change their consistency, apparent dynamic viscosity or viscosity depending on the mechano-dynamical loads, time, pressure and temperature. These changes in product characteristics may affect the function of a component.

Klübersynth UH1 6 oils

Synthetic gear and high-temperature oils for the food-processing and pharmaceutical industries

Temperature-viscosity diagram

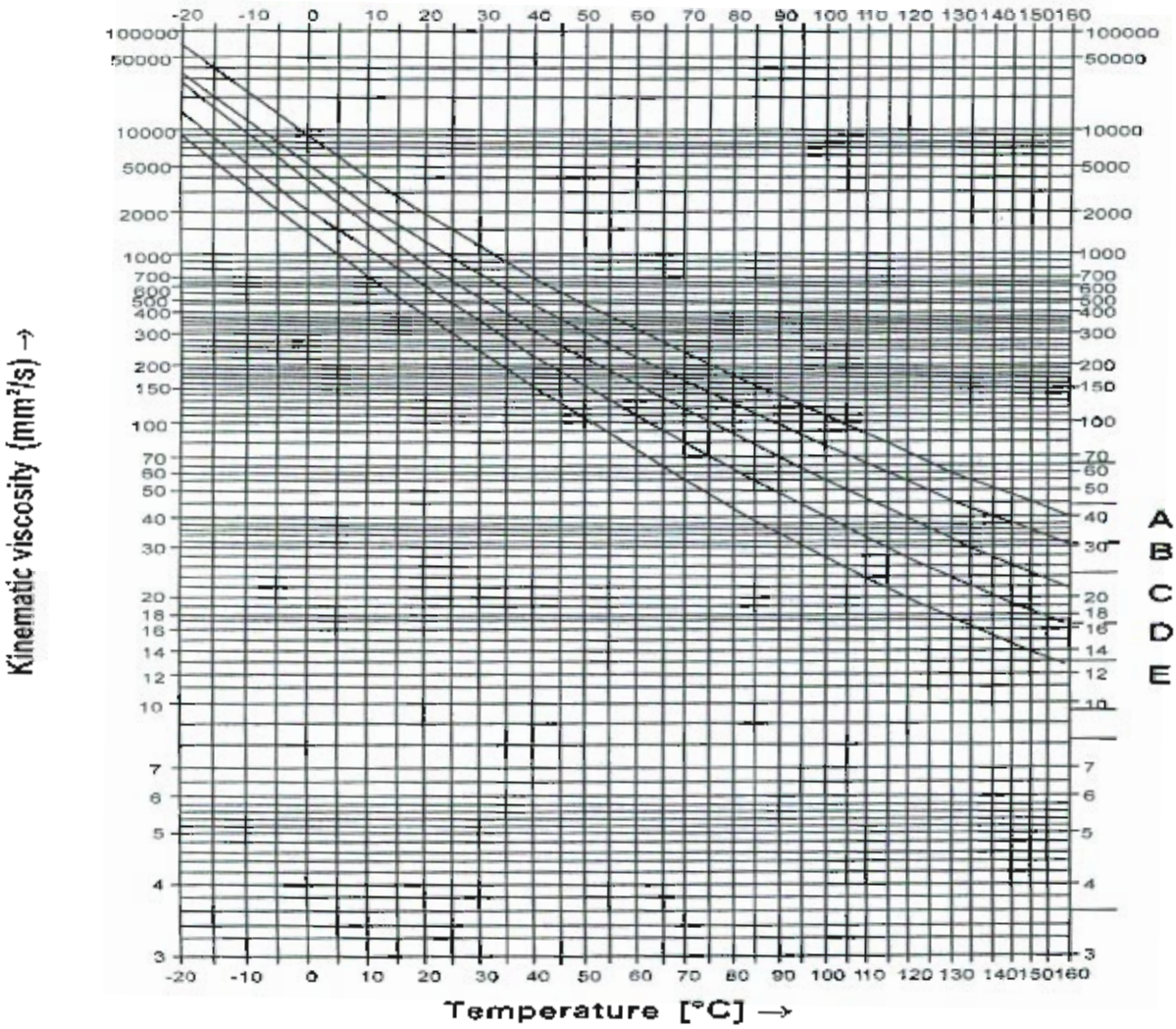

A = Klübersynth UH1 6-680
B = Klübersynth UH1 6-460
C = Klübersynth UH1 6-320
D = Klübersynth UH1 6-220
E = Klübersynth UH1 6-150

Klübersynth UH1 6 oils
Safety Data Sheet

1.1 Product name: Klübersynth UH 1 6 oils
a) -150; b) -220; c) -460; d) -320; e) -680
Code-No.: a) 096 058; b) 096 059; c) 096 060; d) 096 063; e) 096 064;
06.02.2001

1.2 Klüber Lubrication München KG
Geisenhausenerstraße 7
D-81379 München
Tel.: ++49 - 89 78 76 - 0 telephone exchange
Fax: ++49 - 89 78 76 - 333

Emergency telephone no.:
++49 - 89 7876 - 0

2. Composition / information on ingredients
Chemical characterization (preparation): Polyalkylene glycol oil

3. Hazards identification
No particular hazards known

4. First aid measures
After inhalation: Not applicable
After contact with skin: Wash off with soap and plenty of water
After contact with eyes: Rinse with plenty of water
After ingestion: Do not induce vomiting. Obtain medical attention
Advice to doctor: Treat symptomatically. If swallowed or in the event of vomiting, risk of product entering the lungs

5. Fire-fighting measures
Suitable extinguishing media: Water spray, foam, dry powder, carbon dioxide (CO_2)
Unsuitable extinguishing media: High volume water jet
Special Hazards: In case of fire the following can be released: Carbon monoxide, hydrocarbons
Special protective equipment for firefighters: Standard procedure for chemical fires
Additional information: Water mist may be used to cool closed containers. In the event of fire and/or explosion do not breathe fumes

6. Accidental release measures
Personal precautions: Risk of slipping due to leakage/spillage of product
Environmental precautions: Do not flush into surface water or sanitary sewer system
Methods for cleaning up / taking up: Soak up with inert absorbent material (e.g. sand, silica gel, acid binder, universal binder, sawdust) Dispose of absorbed material in accordance with the regulations
Additional information: None

7. Handling and storage
Advice on safe handling: Avoid formation of aerosol
Advice on protection against fire and explosion: No special precautions required
Requirements on storage rooms and vessels: Store at room temperature in the original container
Incompatible materials: Incompatible with oxidizing agents
Further information on storage conditions: None

8. Exposure controls / personal protection
Additional advice on system design: Not applicable
Ingredients and specific control parameters: None
Respiratory protection: No special protective equipment required
Hand protection: No special protective equipment required
Eye protection: No special protective equipment required
Body protection: No special protective equipment required
Other protection measures: No special protective equipment required
General protection and hygiene measures: Clean skin thoroughly after work, apply skin cream. Do not inhale aerosol

9. Physical and chemical properties

Form	liquid
Colour	yellow
Odour	characteristic
Pourpoint	a), b) < – 35; c), d) < – 30 e) < – 25 °C, DIN ISO 3015
Flash point	a), c) > 280; b), d) ~ 250; e) > 270 °C, DIN ISO 2592
Ignition temperature	not applicable
Lower explosion limit	not applicable
Upper explosion limit	not applicable
Vapour pressure-first	not applicable
Density	approx. 1,05 g/cm³, 20 °C DIN 51 757
Water solubility	partly soluble
pH value	no data available
Kinematic viscosity, approx.	a) 150; b) 220; c) 460; d) 320; e) 680 mm²/s, 40 °C, DIN 51 562
Further information	none

10. Stability and reactivity
Conditions to avoid: Do not heat above flash point
Materials to avoid: Strong oxidizing agents
Hazardous decomposition products: None under normal use
Additional information: None

11. Toxicological information
The toxicological data has been taken from products of similar composition
Acute toxicity: LD_{50}/oral/rat = > 2 g/kg (literature data)
Chronic toxicity: None
Human experience: Health injuries are not known or expected under normal use

12. Ecological information
Information on elimination (persistence and degradability): The product has not been tested
Behaviour in environmental compartments: Ecological injuries are not known or expected under normal use
Ecotoxic effects: The product has not been tested
Additional information: Should not be released into the environment

13. Advice on Disposal
Disposal: Dispose of in accordance with your local, state and federal regulations as used oil for incineration
Dispose of contaminated packaging and recommended cleaning: Offer rinsed packaging material to local recycling facilities

14. Transport information

GGVS / GGVE:	not applicable
ADN / ADNR:	not applicable
IMDG-Code:	not applicable
ICAO / IATA-DGR	not applicable

Further information: Not classified as dangerous in the meaning of transport regulations

15. Regulatory information
Labelling according to EU-guidelines: The product does not require a hazard warning label in accordance with EC-directives/German regulations on dangerous substances
National regulations

16. Other information
Classification as USDA H1
Issue-department of Safety Data Sheet: Chemical Documentation, Tel.: ++49 - 89 7876 - 564

The data in this product information is based on our general experience and knowledge at the time of printing and is intended to give information of possible applications to a reader with technical experience. It constitutes neither an assurance of product properties nor does it release the user from the obligation of performing preliminary tests with the selected product. We recommend contacting our Technical Consulting Staff to discuss your specific application. If required and possible we will be pleased to provide a sample for testing. Klüber products are continually improved. Therefore, Klüber Lubrication reserves the right to change all the technical data in this product information at any time without notice.

Freudenberg Klüber Lubrication München KG, a member of the Freudenberg group

Publisher and Copyright:
Klüber Lubrication München KG

Reprints, total or in part, are permitted if source is indicated and voucher copy is forwarded.

Klüber Lubrication München KG
Postfach 70 10 47, D-81310 München
Tel. (0 89) 78 76-0 Telefax (0 89) 78 76-333

Klübersynth UH1 6 oils

Synthetic gear and high-temperature oils for the food-processing and pharmaceutical industries

Worksheet "Selection of oil viscosity for gears"

The manufacturer's instructions on oil viscosity take priority in any case. If the viscosity is not calculated e.g. on the basis of the EHD theory, it can be selected in accordance with this worksheet. Selection is based on DIN 51 509 Pt 1, "Selection of lubricants for thoothed gears". All information in this worksheet applies only to Klübersynth UH1 6 oils. The differing viscosity-temperature and viscosity-pressure behaviour of these synthetic oils as compared to mineral oils has been taken into account.

The correct viscosity must be selected independently for every gear stage, and a compromise is required for multistage gears. The selection of the correct viscosity in accordance with this worksheet is based on the oil's expected operation temperature, i.e. the oil sump temperature or the temperature of the injected oil. This temperature is calculated by determining the gear's thermal economy, taking into account the produced losses, or, in the case of gears already installed, by measuring the temperature. It might be required to select a lower viscosity to ensure lubricant supply during a cold start and at low ambient temperatures. In the individual case it is necessary to check the viscosity at the existing starting temperature (especially in the case of oil circulation lubrication), or to test the components at the expected starting temperature (especially in the case of immersion lubrication).

The required viscosity grade to the Klübersynth UH 1 6 oils for a gear stage is determined by means of the Klüber viscosity index and the expected oil operating temperature using the diagram of the last page.

Determination of the Klüber viscosity index for a spur gear stage:

The required Klüber viscosity index for a spur gear stage is calculated in accordance with table 1.

Table 1:

Force-speed factor $K_S/v \left[\frac{MPa \cdot s}{m}\right]$	Klüber viscosity index KVZ
≤ 0.02	1
> 0.02 to 0.08	2
> 0.08 to 0.3	3
> 0.3 to 0.8	4
> 0.8 to 1.8	5
> 1.8 to 3.5	6
> 3.5 to 7.0	7
> 7.0	8

v = Peripheral speed at the reference circle [m/s]
K_S = Rolling pressure acc. to Stribeck [N/mm²]

$$K_S = \frac{F_t}{b \cdot d_1} \cdot \frac{U+1}{U} \cdot Z_H^2 \cdot Z_\varepsilon^2 \cdot K_A \text{ [N/mm}^2\text{, MPa]}$$

F_t = Nominal peripheral force [N]
b = Tooth width [mm]
d_1 = Diameter of reference circle [mm]
U = Gear ratio = Z_2/Z_1; $Z_2 > Z_1$
Z_H = Distribution factor*1
Z_ε = Contact ratio*1
K_A = Application factor*2

*1 Note: Determination of Z_H and Z_ε according to DIN 3990, Pt. 2.
For a rough calculation: $Z_H^2 \cdot Z_\varepsilon^2 \approx 3$

*2 Note: Guide values for K_A are listed in DIN 3990, Pt. 6.

Example 1:

Single-stage spur gear driving a fan

Drive:	Electric motor
Nominal peripheral force:	F_t = 3000 N
Tooth width:	b = 25 mm
Diameter of reference circle:	d_1 = 230 mm
Gear ratio:	U = 2.5
$Z_H^2 \cdot Z_\varepsilon^2$:	≈ 3
K_A:	1
Peripheral speed:	4 m/s
Expected oil sump temperature:	≈ 90 °C
Rolling pressure acc. to Stribeck:	K_S = 2.2 MPa
Force-speed factor:	$K_S/v = 0.55 \frac{Mpa \cdot s}{m}$
Acc. to table 1, Klüber viscosity index:	KVZ = 4

For this application we selected Klübersynth UH1 6-150 in accordance with the diagram on page 4.

Determination of the Klüber viscosity index for a worm gear stage:

The required Klüber viscosity index for a worm gear stage is calculated in accordance with table 2.

Table 2:

Force-speed factor $K_S/v \left[\frac{N \cdot min}{m^2}\right]$	Klüber viscosity index KVZ
≤ 60	5
> 60 to 400	6
> 400 to 1800	7
> 1800 to 6000	8
> 6000	9

$$\text{Force-speed factor } K_S/v = \frac{T_2}{n_1 \cdot a^3} \cdot K_A \left[\frac{N \cdot min}{m^2}\right]$$

T_2 = Output moment [Nm]
n_1 = Worm speed [min^{-1}]
a = Center distance [m]
K_A = Application factor

Note: Guide values for K_A are listed in DIN 3990 Pt. 6.

Example 2:

Worm gear stage of a gear motor driving a circular conveyor

Drive:	Electric motor
Output moment:	T_2 = 300 Nm
Worm speed:	n_1 = 350 min^{-1}
Center distance:	a = 0.063 m
Application factor:	K_A = 1
Force-speed factor:	$K_S/v = 3427.9 \frac{N \cdot min}{m^2}$
Klüber viscosity index acc. to table 2:	KVZ = 8
Expected oil sump temperature:	≈ 85 °C

For this application *Klübersynth* UH1 6-460 was selected in accordance with the diagram on page 4.

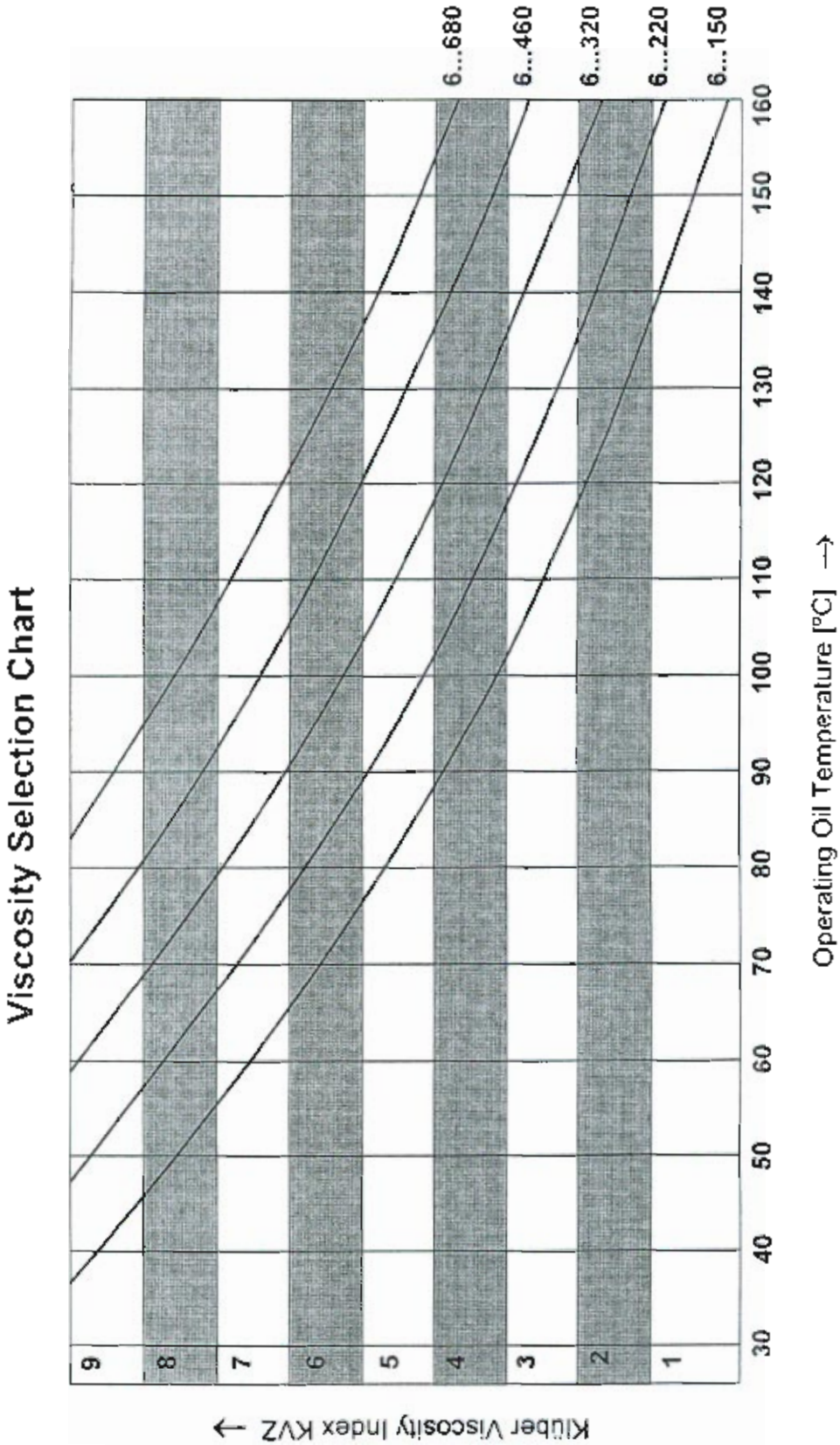
Viscosity Selection Chart
Klüber Viscosity Index KVZ →
9
8
7
6
5
4
3
2
1
30
40
50
60
70
80
90
100
110
120
130
140
150
160
6...680
6...460
6...320
6...220
6...150
Operating Oil Temperature [°C] →

Safety Data Sheet conformable to EC directive 91/155 EEC

1. Identification of the substance/preparation and of the company

Product name: Klübersynth UH1 6-220
Code-No.: 096059

Company: Klüber Lubrication München KG
Geisenhausenerstraße 7
D-81379 München

Telephone: ++49 - 89 - 7876 - 0 telephone exchange
Telefax: ++49 - 89 - 7876 - 333

Emergency telephone no.: ++49 - 89 - 7876 - 0

2. Composition/information on ingredients

Chemical characterization : (preparation)
polyalkylene glycol oil

3. Hazards identification

No particular hazards known.

4. First aid measures

After inhalation
Not applicable

After contact with skin
Wash off with soap and plenty of water.

After contact with eyes
Rinse with plenty of water.

After ingestion
Do not induce vomiting. Obtain medical attention.

Advice to doctor
Treat symptomatically. If swallowed or in the event of vomiting, risk of product entering the lungs.

5. Fire-fighting measures

Suitable extinguishing media
water spray, foam, dry powder, carbon dioxide (CO_2)

Unsuitable extinguishing media
high volume water jet

Special hazards
In case of fire the following can be released: Carbon monoxide, hydrocarbons

Special protective equipment for firefighters
Standard procedure for chemical fires.

Additional information
Water mist may be used to cool closed containers. In the event of fire and/or explosion do not breathe fumes.

6. Accidental release measures

Personal precautions
Risk of slipping due to leakage/spillage of product.

Environmental precautions
Do not flush into surface water or sanitary sewer system.

Methods for cleaning up/taking up
Soak up with inert absorbent material (e.g. sand, silica gel, acid binder, universal binder, sawdust). Dispose of absorbed material in accordance with the regulations.

Additional information
None

7. Handling and storage

7.1 Handling

Advice on safe handling
Avoid formation of aerosol.

Advice on protection against fire and explosion
No special precautions required.

7.2 Storage

Requirements on storage rooms and vessels
Store at room temperature in the original container.

Incompatible materials
Incompatible with oxidising agents.

Further information on storage conditions
None

8. Exposure controls/personal protection

8.1 Additional advice on system design

not applicable

8.2 Ingredients and specific control parameters

None

8.3 Personal protective equipment

Respiratory protection

No special protective equipment required.

Hand protection
No special protective equipment required.

Eye protection
No special protective equipment required.

Body protection
No special protective equipment required.

Other protection measures
No special protective equipment required.

General protection and hygiene measures
Clean skin thoroughly after work; apply skin cream. Do not inhale aerosol.

9. Physical and chemical properties

9.1 Appearance

Form: liquid
Colour: yellow - pink
Odour: characteristic

9.2 Safety data

			Test method
Change in physical state			
Pour point:	< -35	°C	DIN ISO 3016
Flash point:	~ 250	°C	DIN ISO 2592
Ignition temperature:	not applicable	°C	
Explosive properties			
lower explosion limit:	not applicable		
upper explosion limit:	not applicable		
Vapour pressure-first:	not applicable		
Density:	approx. 1,05 g/cm³, 20°C		DIN 51757
Water solubility:	partly soluble	g/l	
pH value:	no data available		
Kinematic viscosity:	approx. 220 mm²/s, 40°C		DIN 51562

9.3 Further information

None

10. Stability and reactivity

Conditions to avoid
Do not heat above flash point.

Materials to avoid
strong oxidising agents

Hazardous decomposition products
none under normal use

Additional information
None

11. Toxicological information

The toxicological data has been taken from products of similar composition.
Acute toxicity : LD50/oral/rat = > 2 g/kg (literature data)
Chronic toxicity : None
Human experience : Health injuries are not known or expected under normal use

12. Ecological Information

Information on elimination (persistence and degradability)
The product has not been tested.

Behavour in environmental compartments
Ecological injuries are not known or expected under normal use.

Ecotoxic effects
The product has not been tested.

Additional information
Should not be released into the environment.

13. Advice on disposal

Code of waste: **120110**
Wastes from shaping and surface treatment of metals and plastics; wastes from shaping (including forging, welding, pressing, drawing, turning, cutting and filing); synthetic machining oils

Disposal
Dispose of in accordance with your local, state and federal regulations as used oil for incineration. The code of waste has to correspond to the Council Directive 75/442/EEC and be specific as far as the related sector and process are concerned.

Dispose of contaminated packaging and recommended cleaning
Offer rinsed packaging material to local recycling facilities.

14. Transport information

14.1 Land transport

GGVS/GGVE: not applicable

14.2 Inland waterways transport

ADN/ADNR: not applicable

14.3 Sea transport

IMDG-Code: not applicable

14.4 Air transport

ICAO/IATA-DGR: not applicable

14.5 Further Information

Not classified as dangerous in the meaning of transport regulations.

15. Regulatory information

15.1 Labelling according to EU-guidelines
The product does not require a hazard warning label in accordance with EC-directives/German regulations on dangerous substances.

15.2 National regulations

16. Other information

Classification as USDA H 1.

Issue-department of Safety Data Sheet: Chemical Documentation, Tel.: +49 - 89 - 7876 - 564

The information provided in this Safety Data Sheet is correct to the best of our knowledge, information and belief at the date of its publication. The information given is designed only as a guidance for safe handling, use, processing, storage, transportation, disposal and release and is not to be considered a warranty or quality specification. The information relates only to the specific material designated and may not be valid if the material is used in combination with any other materials or if it is processed, unless specified in the text.

CONFIRMATION ABOUT REGULATION (EC) No 1935/2004 on materials and articles intended to come into contact with food FOR KLUEBER SPECIAL LUBRICANTS FOR USE IN THE FOOD PROCESSING AREA („H 1")

Dear Sirs,

according to article 1 no 2 of Regulation (EC) No 1935/2004 this guideline covers
„... materials and articles, including active and intelligent food contact materials and articles, (hereinafter referred to as materials and articles) which in their finished state:
a) are intended to be brought into contact with food;
or
b) are already in contact with food and were intended for that purpose;
or
c) can reasonably be expected to be brought into contact with food or to transfer their constituents to food under normal or foreseeable conditions of use."

Our lubricants for the food processing area are mostly matierals with no intended or foreseeable contact with food. Solely an „incidental food contact" can not be excluded. Therefore these products are not subject to the regulation (EC) no 1935/2004.

Our lubricants for the food processing area are checked whether they are in compliance with the regulations of FDA CFR 21 by the American association NSF within the „Nonfood Compounds Registration Program" and are registered as H1 lubricants („lubricants with incidental food contact"). The NSF H1 lubricants are state-of-the-art and used generally if product contact is technically not avoidable.

The corresponding registrations are available via internet address
http://www.nsf.org/usda/psnclistings.asp.
Please enter at „company name" kluber .

Klüber Lubrication München KG
Postfach 70 10 47 · 81310 München
Geisenhausenerstraße 7 · 81379 München
Deutschland

Telefon +49 89 7876-0
Telefax +49 89 7876-333
www.klueber.com

Amtsgericht München
HRA 46624
USt-IdNr.: DE 144456126

Deutsche Bank München
IBAN DE94 7007 0010 0902 8101 00
BIC/SWIFT DEUTDEMMXXX

Our products

Klübersynth V 64-300
Klüberbeta VR 67-17002
Klüberbeta VR 67-3500
Paraliq GTE 703
Unisilkon L 250 L
Unisilkon L 641
Unisilkon NCA 3001

are checked against the ANSI/NSF 51 standard which is also accepted as common state-of-the-art. At this the reliability of products with food contact is verified and thus the conformity with Regulation (EC) 1934/2004 is confirmed.

We hope that we have been of assistance in this matter and will be pleased to answer any further questions regarding lubrication engineering.

Munich, 13th of May, 2009

KLÜBER LUBRICATION MÜNCHEN KG
Material Compliance Management

i.A. Monika Gute

i.A. Katharina Staff

The information provided is the result of our product tests and represents our current knowledge as well as the legislation at the date of issue.

Klüber Lubrication München KG
Postfach 70 10 47 · 81310 München
Geisenhausenerstraße 7 · 81379 München
Deutschland

Telefon +49 89 7876-0
Telefax +49 89 7876-333
www.klueber.com

Amtsgericht München
HRA 46624
USt-IdNr.: DE 144455126

Deutsche Bank München
IBAN DE94 7007 0010 0902 8101 00
BIC/SWIFT DEUTDEMMXXX

February 13, 2002

KLUBER LUBRICATION AG.
Attn: Luciana Husfeld
Geisenhausener Str. 7
81379 MÜNCHEN
Germany

RE KLÜBERSYNTH UH1 6-220
Category Code: H1
NSF Registration No. 124438

Dear Luciana Husfeld:

NSF has processed the application for Registration of **KLÜBERSYNTH UH1 6-220** to *the NSF Registration Guidelines for Proprietary Substances and Nonfood Compounds (2002)*, which are available at www.nsf.org/usda. The NSF Nonfood Compounds Registration Program is a continuation of the USDA product approval and listing program, which is based on meeting regulatory requirements including FDA 21 CFR for appropriate use, ingredient and labeling.

This product is acceptable as a lubricant with incidental food contact (H1) for use in and around food processing areas. Such compounds may be used on food processing equipment as a protective anti-rust film, as a release agent on gaskets or seals of tank closures, and as a lubricant for machine parts and equipment in locations in which there is a potential exposure of the lubricated part to food. The amount used should be the minimum required to accomplish the desired technical effect on the equipment. If used as an anti-rust film, the compound must be removed from the equipment surface by washing or wiping, as required to leave the surface effectively free of any substance, which could be transferred, to food being processed.

This product is NSF Registered when the NSF Registration Number, Category Code, and Registration Mark appear on the NSF approved product label. The NSF Registration Mark can be downloaded from the NSF web site, at http://www.nsf.org/mark/download_marks.html.

Registration of this compound by NSF International is in no way to be construed as an endorsement of the compound, appropriate selection for use, or any performance or efficacy claims made by the manufacturer.

Registration status may be verified at any time via the NSF web site, at http://www.nsf.org/usda. Changes in formulation or label, without the prior written consent of NSF, will void registration, and will supersede the on-line listing.

Sincerely,

Kenji Yano

Kenji Yano
NSF Nonfood Compounds Registration and listing program

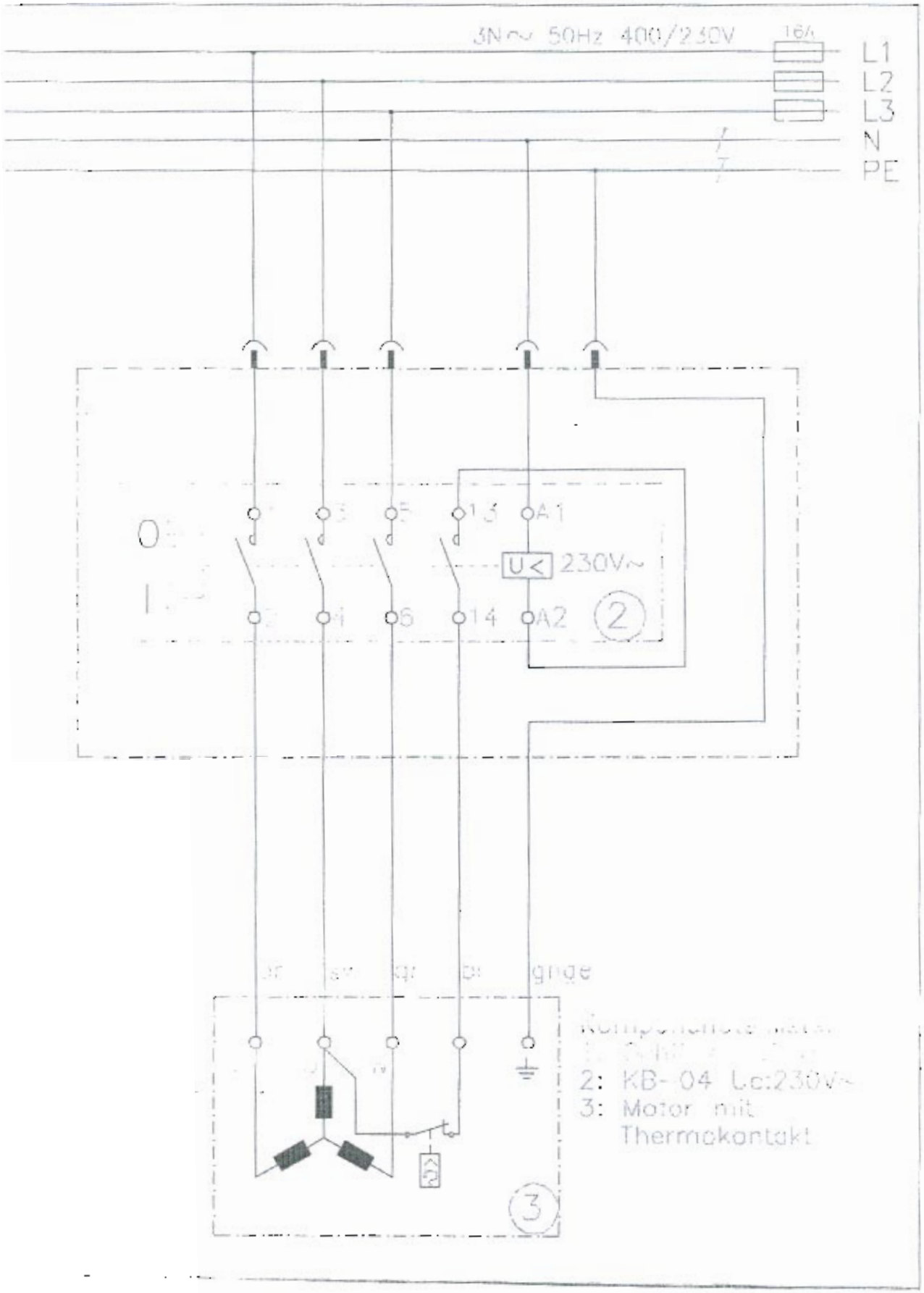
3N~ 50Hz 400/230V
16A
L1
L2
L3
N
PE
A1
U<
230V~
A2
2
gnge
2: KB-04 Uc:230V~
3: Motor mit
Thermokontakt
3

VISCO JET®
Rührsysteme GmbH

VISCO JET
Rührsysteme GmbH
Daimlerstr. 1
79761 Waldshut-Tiengen

+49 7741 96567-0
+49 7741 96567-15
info@viscojet.com

EG-Konformitätserklärung
CE Déclaration de conformité
EC Declaration of conformity

Wir / *Nous* / We,

VISCO JET Rührsysteme GmbH
Daimlerstr. 1
D – 79761 Waldshut-Tiengen

erklären in alleiniger Verantwortung, dass das Produkt
déclarons de notre seule responsabilité que le produit
bearing sole responsibility, hereby declare that the product

Beschreibung des Produkts
Container-Aufsatz-Rührwerk

Description du produit
Agitateur de support pour conteneur

Description of product
Container-cowl-agitator

Typenreihe / Série type / Type Series
VJ350.030

auf das sich diese Erklärung bezieht, mit der/den folgenden Norm(en) oder normativen Dokumenten übereinstimmt:
auquel se rapporte la présente déclaration est conforme aux normes ou aux documents normatifs suivants.
referred to by this declaration is in conformity with the following standards or normative documents.

Bestimmungen der Richtlinie *Désignation de la directive* provisions of the directive	**Titel und/oder Nummer sowie Ausgabedatum der Norm(en):** *titre et/ou numéro ainsi que date d'émission de la/des norme(s)* *title and/or number and date of issue of the standard(s):*
2006/42/EG: Maschinensicherheit *2006/42/CE: Sûreté des machines* 2006/42/EC: Machinery safety	EN ISO 12100: 2010 EN ISO 13850: 2006 EN ISO 13857: 2008
2004/108/EG: Elektromagnetische Verträglichkeit *2004/108/CE: Compatibilité électromagnetique* 2004/108/EC: Electromagnetic compatibility	EN 61000-6-2: 2005 EN 61000-6-3: 2001
2006/95/EG: Elektrische Betriebsmittel zur Verwendung innerhalb bestimmter Spannungsgrenzen *2006/95/CE: matériel électrique destiné à être employé dans certaines limites de tension* Équipement de basse tension 2006/95/EC: Electrical Equipment designed for use within certain voltage limits	EN 60204-1: 2006
Name und Adresse des Dokumentationsverantwortlichen: *Nom et address du person responsible pour la documentation.* Name and address of the person authorised to compile the relevant technical documentation:	Frau Gabriela Ziel-Gantert Daimlerstr. 1 79761 Waldshut-Tiengen Tel. +49 7741 96567 65

Waldshut-Tiengen, 25.09.2012
Ort und Datum
Lieu et date
Place and date

Geschäftsführender Gesellschafter
Gérant
Managing Director & shareholder