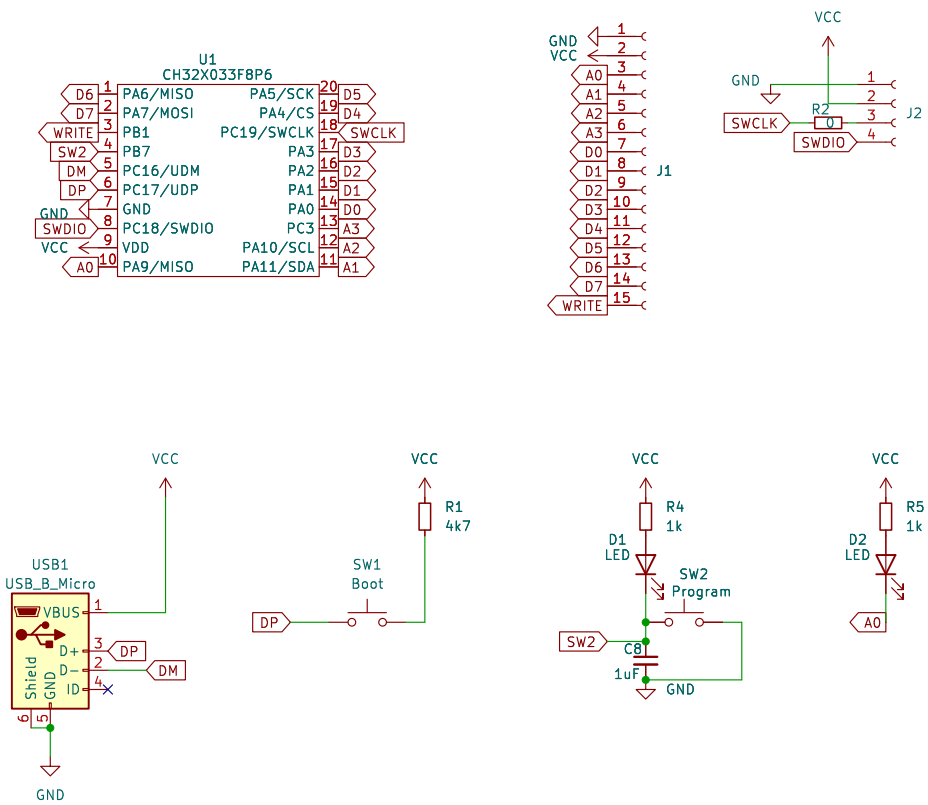

Sheet: /
File: cpu−programmer.kicad_sch

Title:

Size: A4	Date:	**Rev:**
KiCad E.D.A. 9.0.1−rc1		Id: 1/1