REVISIONS				
ZONE	REV.	DESCRIPTION	DATE	APPROVED

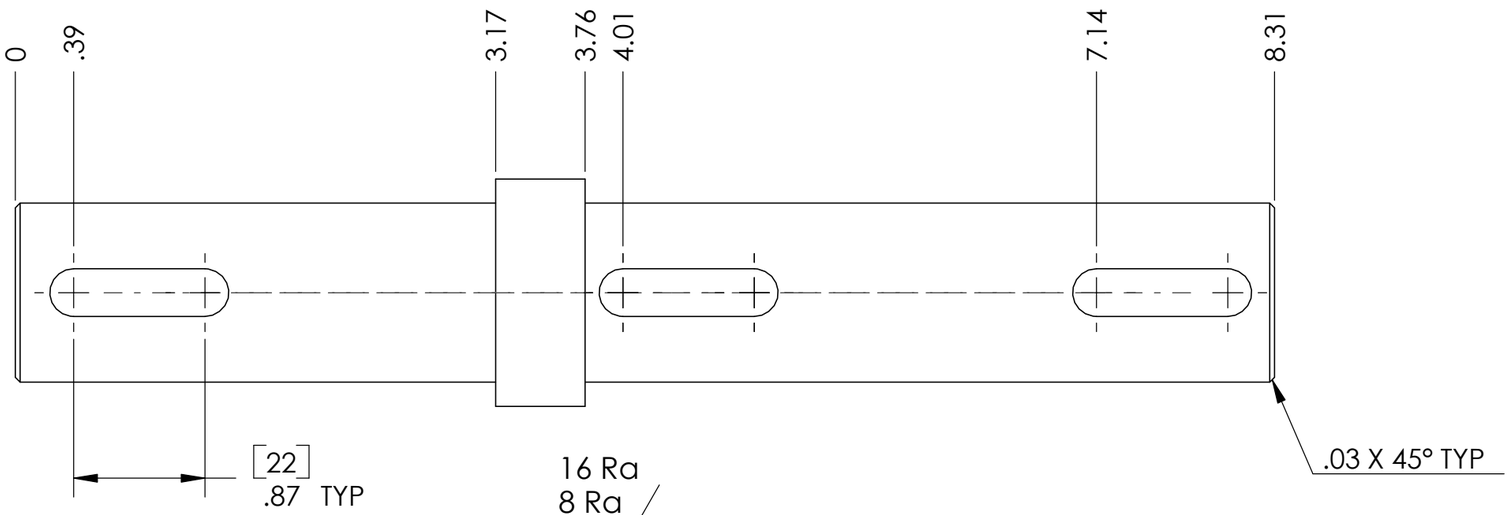

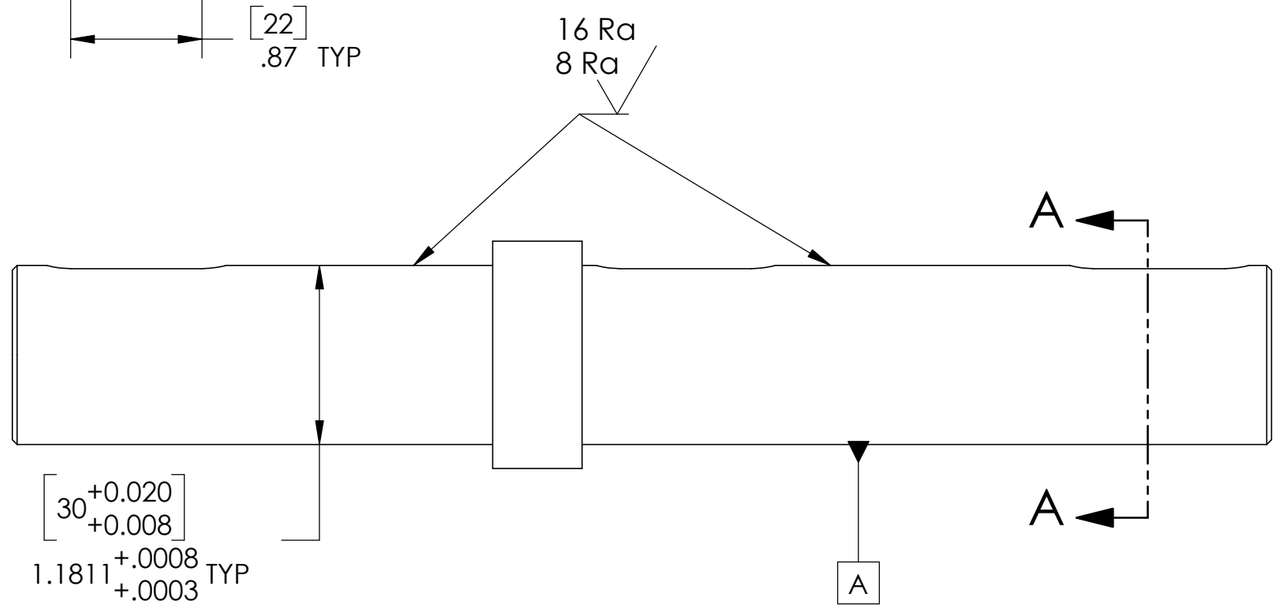

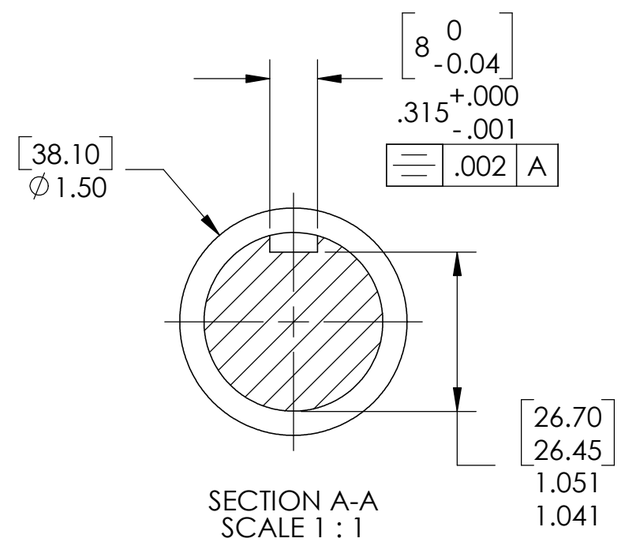

UNLESS OTHERWISE SPECIFIED:		NAME	DATE
DIMENSIONS ARE IN [MM] INCHES TOLERANCES: FRACTIONAL ±1/32" (0.8 mm) ANGULAR: MACH ± 0.1 BEND ±0.5 TWO PLACE DECIMAL ±.01" (.25 mm) THREE PLACE DECIMAL ±.005" (.12 mm)	DRAWN		
	CHECKED		
	APPROVAL		
	COMMENTS:		
INTERPRET GEOMETRIC TOLERANCING PER ASME Y14.5			
MATERIAL UNS G10450			
FINISH			
HEAT TREATMENT			

TITLE:

Gearbox shaft

SIZE	DWG. NO.	REV
B	GearboxShaft	
SCALE: 1:2	WEIGHT:	SHEET 1 OF 1

This drawing is supplied as is. No guarantee of machine performance or reliability is given.