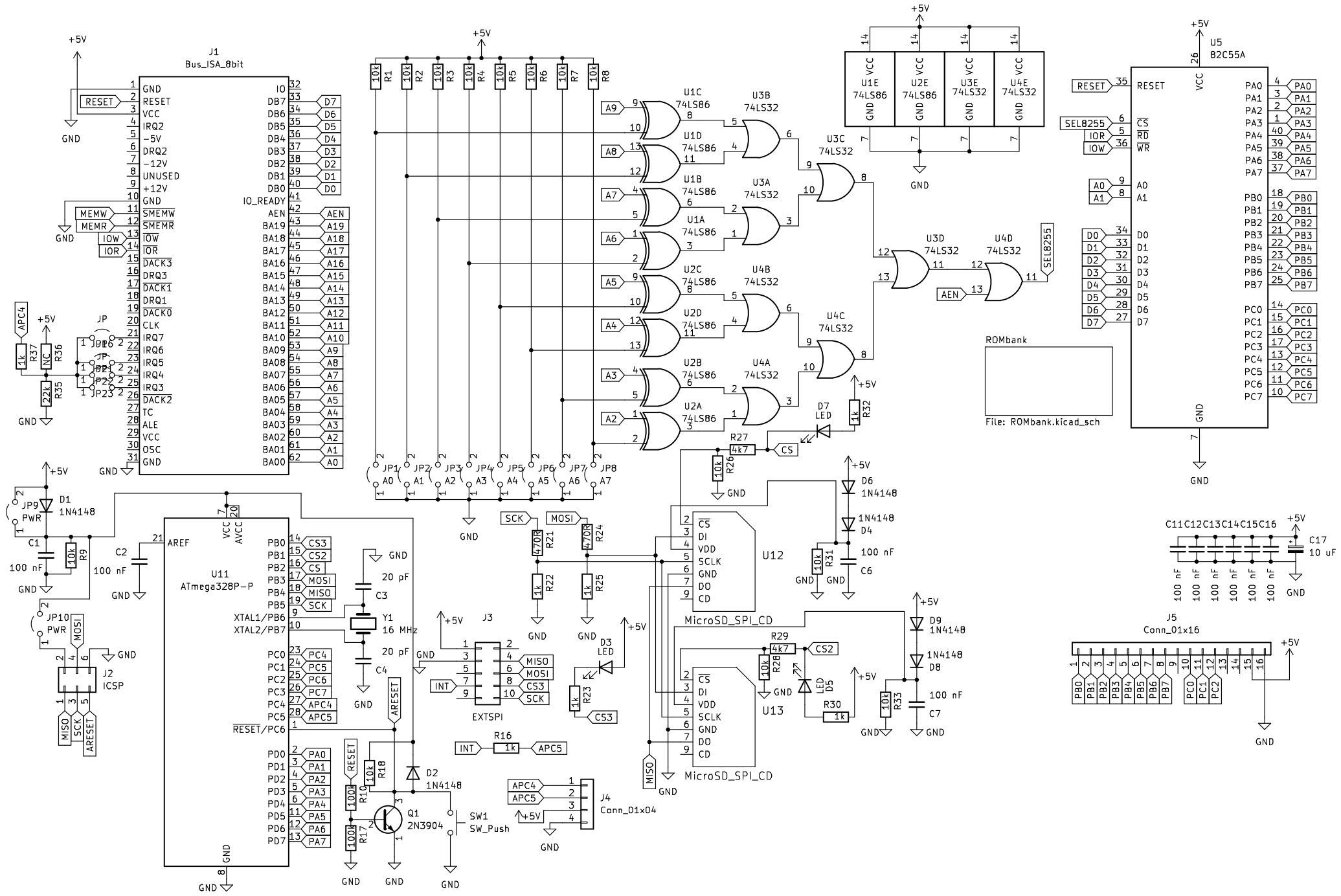
J1
Bus_ISA_8bit
U11
ATmega328P-P
U12
MicroSD_SPI_CD
U13
MicroSD_SPI_CD
U5
82C55A
ROMbank
File: ROMbank.kicad_sch
J2
ICSP
J3
EXTSPI
J4
Conn_01x04
J5
Conn_01x16
Y1
16 MHz
Q1
2N3904
SW1
SW_Push
D1
1N4148
D2
1N4148
D3
LED
D7
LED
D5
LED
U1E
74LS86
U2E
74LS86
U3E
74LS32
U4E
74LS32
U1C
74LS86
U1D
74LS86
U1B
74LS86
U1A
74LS86
U2C
74LS86
U2D
74LS86
U2B
74LS86
U2A
74LS86
U3B
74LS32
U3A
74LS32
U4B
74LS32
U4A
74LS32
U3C
74LS32
U4C
74LS32
U3D
74LS32
U4D
74LS32
+5V
GND
RESET
MEMW
MEMR
IOW
IOR
SEL8255
AEN
CS
SCK
MOSI
MISO
INT
ARESET
APC4
APC5
CS2
CS3
C17
10 uF
C11C12C13C14C15C16
100 nF

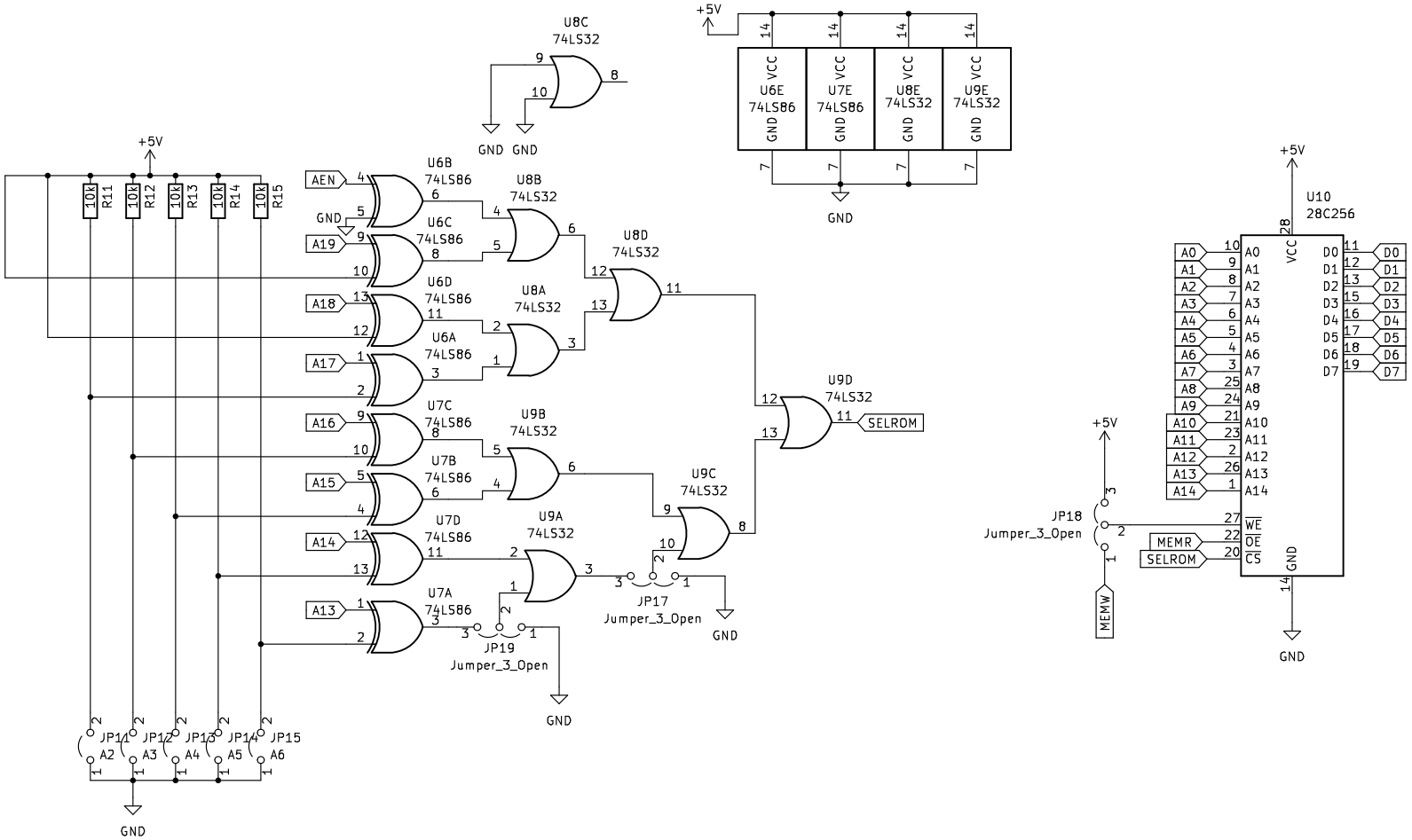

H1 MountingHole

H2 MountingHole