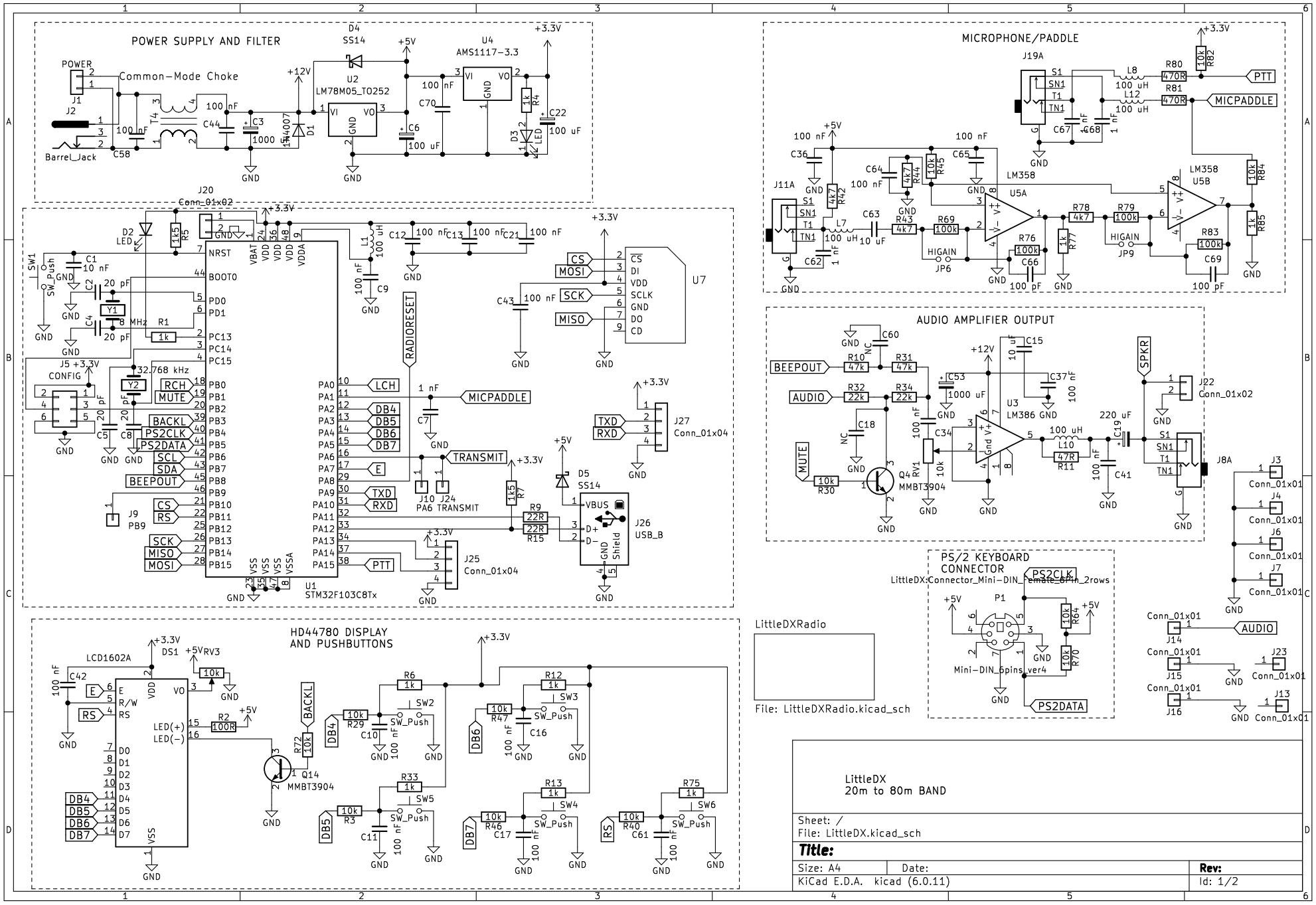
POWER SUPPLY AND FILTER
MICROPHONE/PADDLE
AUDIO AMPLIFIER OUTPUT
HD44780 DISPLAY AND PUSHBUTTONS
PS/2 KEYBOARD CONNECTOR
LittleDXRadio
File: LittleDXRadio.kicad_sch
LittleDX
20m to 80m BAND
Sheet: /
File: LittleDX.kicad_sch
Title:
Size: A4
Date:
Rev:
KiCad E.D.A. kicad (6.0.11)
Id: 1/2

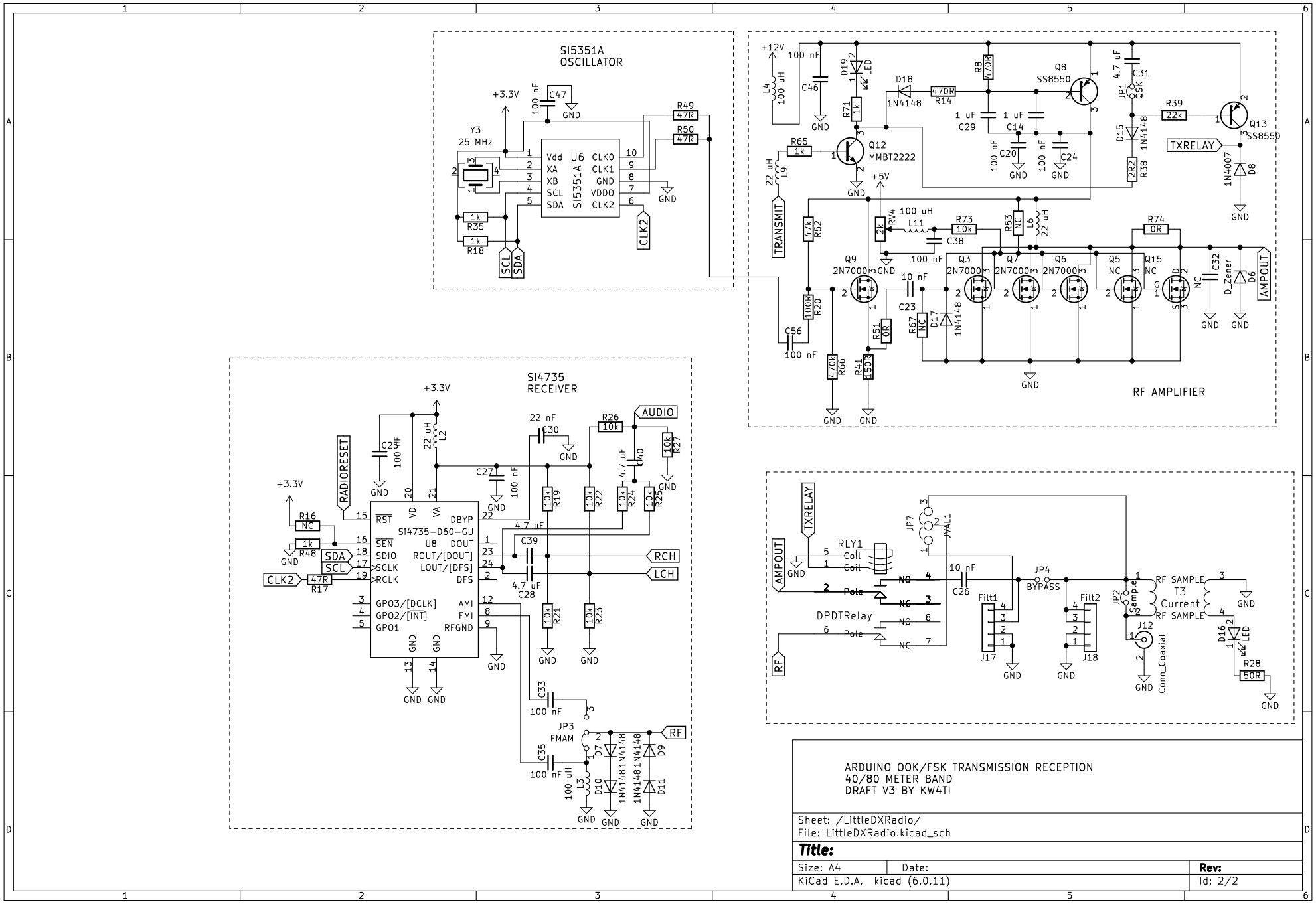

ARDUINO OOK/FSK TRANSMISSION RECEPTION
40/80 METER BAND
DRAFT V3 BY KW4TI

Sheet: /LittleDXRadio/
File: LittleDXRadio.kicad_sch

Title:

Size: A4	Date:	Rev:
KiCad E.D.A. kicad (6.0.11)		Id: 2/2