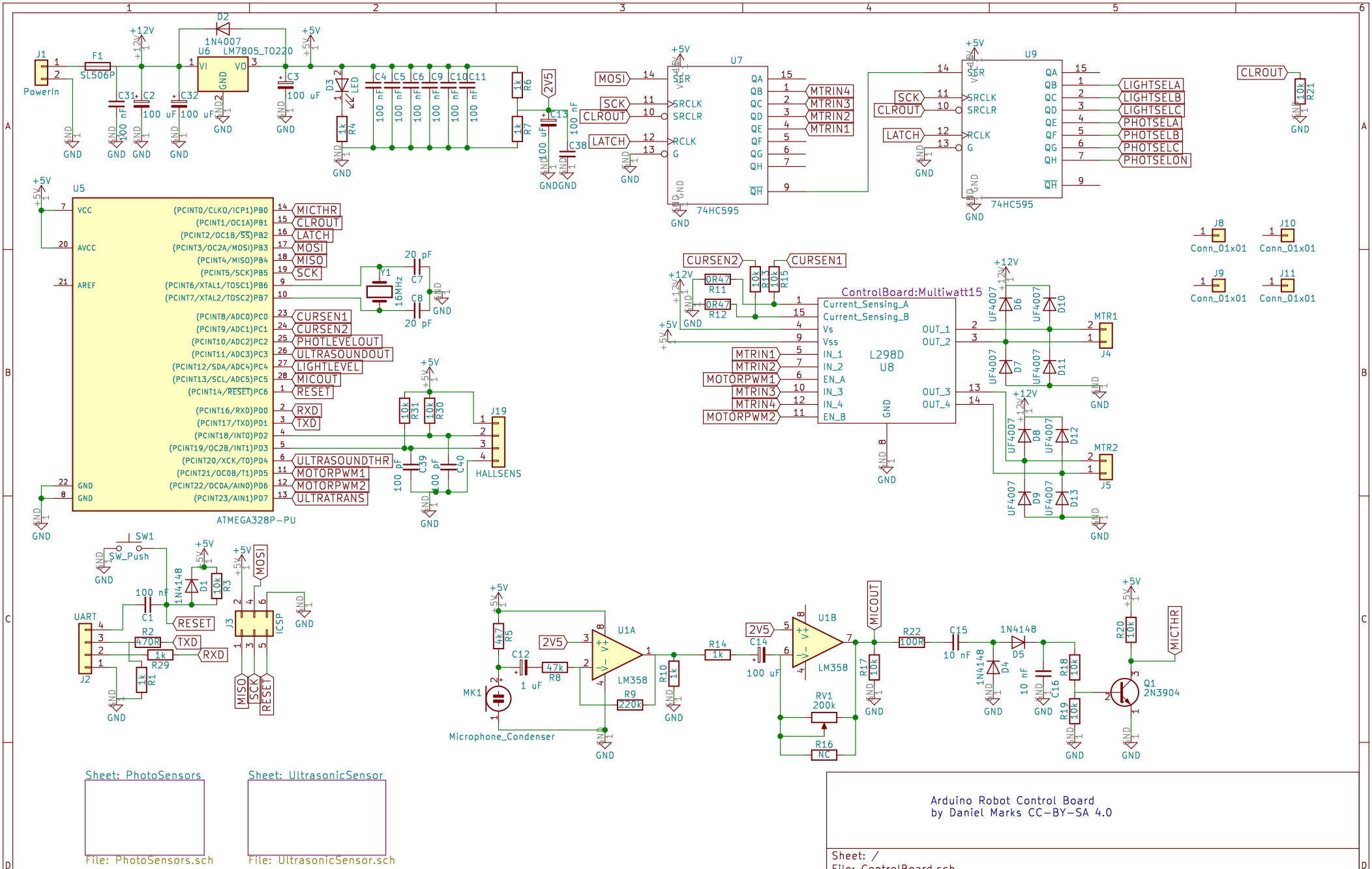

Sheet: PhotoSensors

File: PhotoSensors.sch

Sheet: UltrasonicSensor

File: UltrasonicSensor.sch

Arduino Robot Control Board
by Daniel Marks CC-BY-SA 4.0

Sheet: /
File: ControlBoard.sch

Title:

Size: A4	Date:	Rev:
KiCad E.D.A. kicad 4.0.7		Id: 1/3

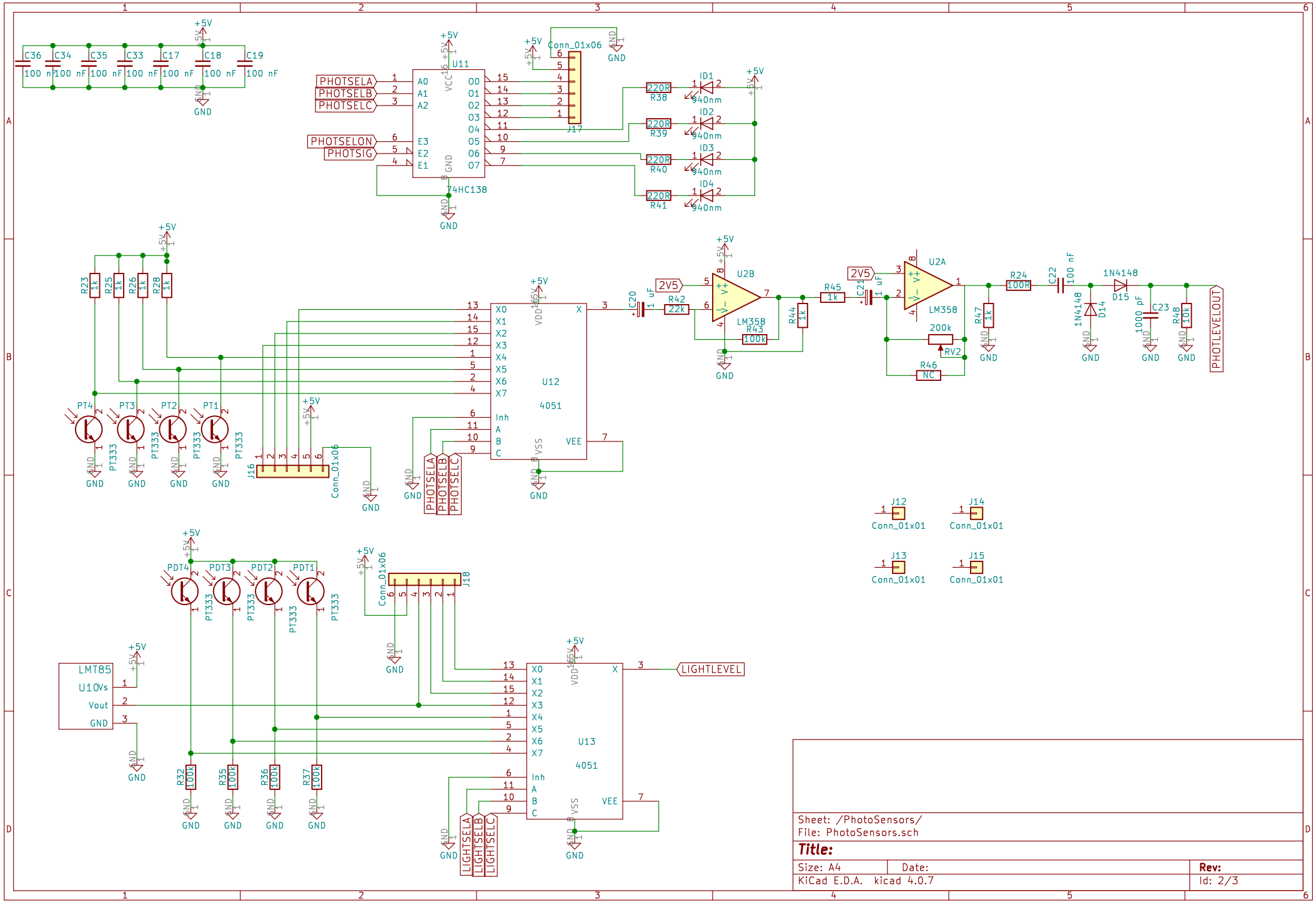
C36 100 nF
C34 100 nF
C35 100 nF
C33 100 nF
C17 100 nF
C18 100 nF
C19 100 nF
+5V
GND
PHOTSELA
PHOTSELB
PHOTSELC
PHOTSELON
PHOTSIG
U11
74HC138
Conn_01x06
J17
R38 220R
R39 220R
R40 220R
R41 220R
ID1 940nm
ID2 940nm
ID3 940nm
ID4 940nm
R23 1k
R25 1k
R26 1k
R28 1k
PT4
PT3
PT2
PT1
PT333
J16
U12
4051
2V5
U2B
U2A
LM358
R42 22k
R43 100k
R44 1k
R45 1k
C20 1 uF
C21 1 uF
R46 NC
RV2 200k
R47 1k
R24 100R
C22 100 nF
1N4148
D14
D15
C23 1000 pF
R48 10k
PHOTLEVELOUT
J12 Conn_01x01
J14 Conn_01x01
J13 Conn_01x01
J15 Conn_01x01
PDT4
PDT3
PDT2
PDT1
J18
LMT85
U10Vs
Vout
R32 100k
R35 100k
R36 100k
R37 100k
U13
LIGHTSELA
LIGHTSELB
LIGHTSELC
LIGHTLEVEL
Sheet: /PhotoSensors/
File: PhotoSensors.sch
Title:
Size: A4
Date:
Rev:
KiCad E.D.A. kicad 4.0.7
Id: 2/3

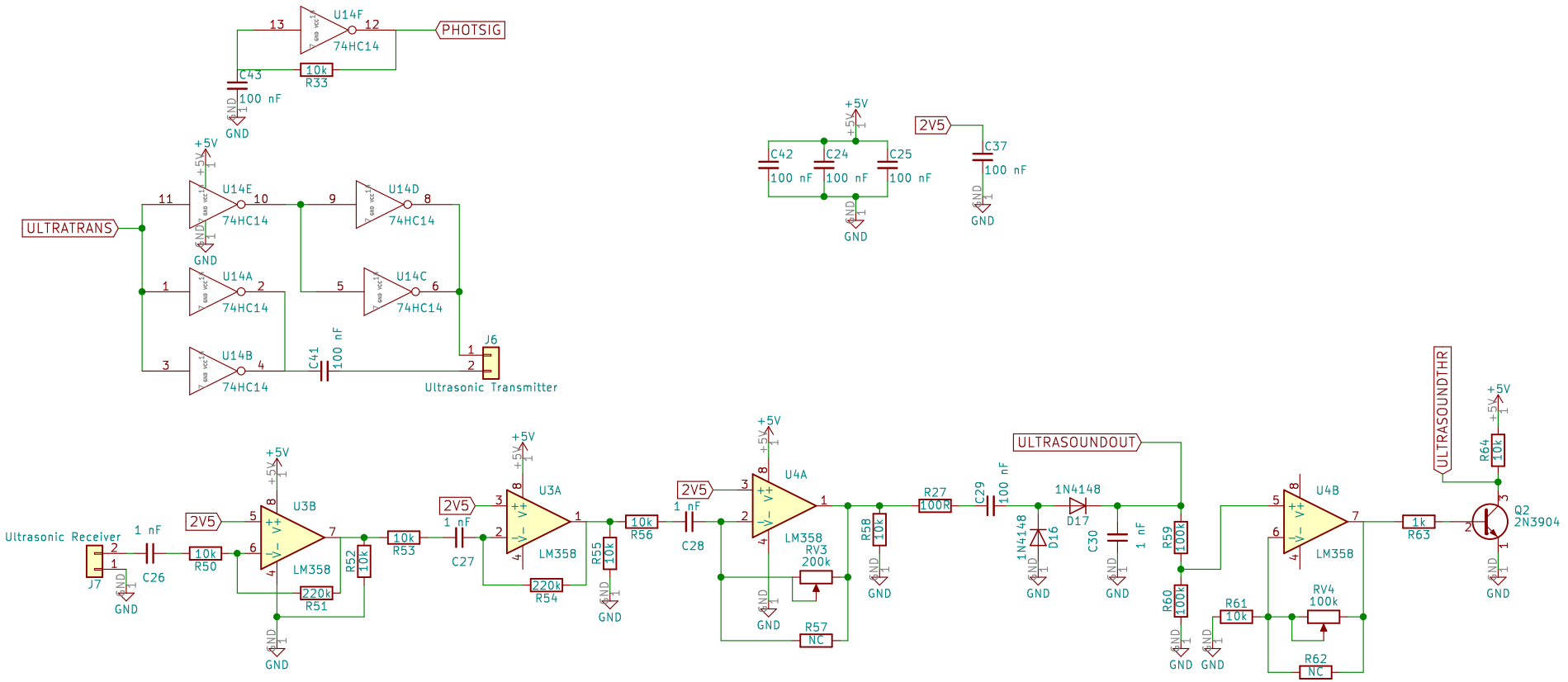

Sheet: /UltrasonicSensor/
File: UltrasonicSensor.sch

Title:

Size: A4	Date:	Rev:
KiCad E.D.A. kicad 4.0.7		Id: 3/3