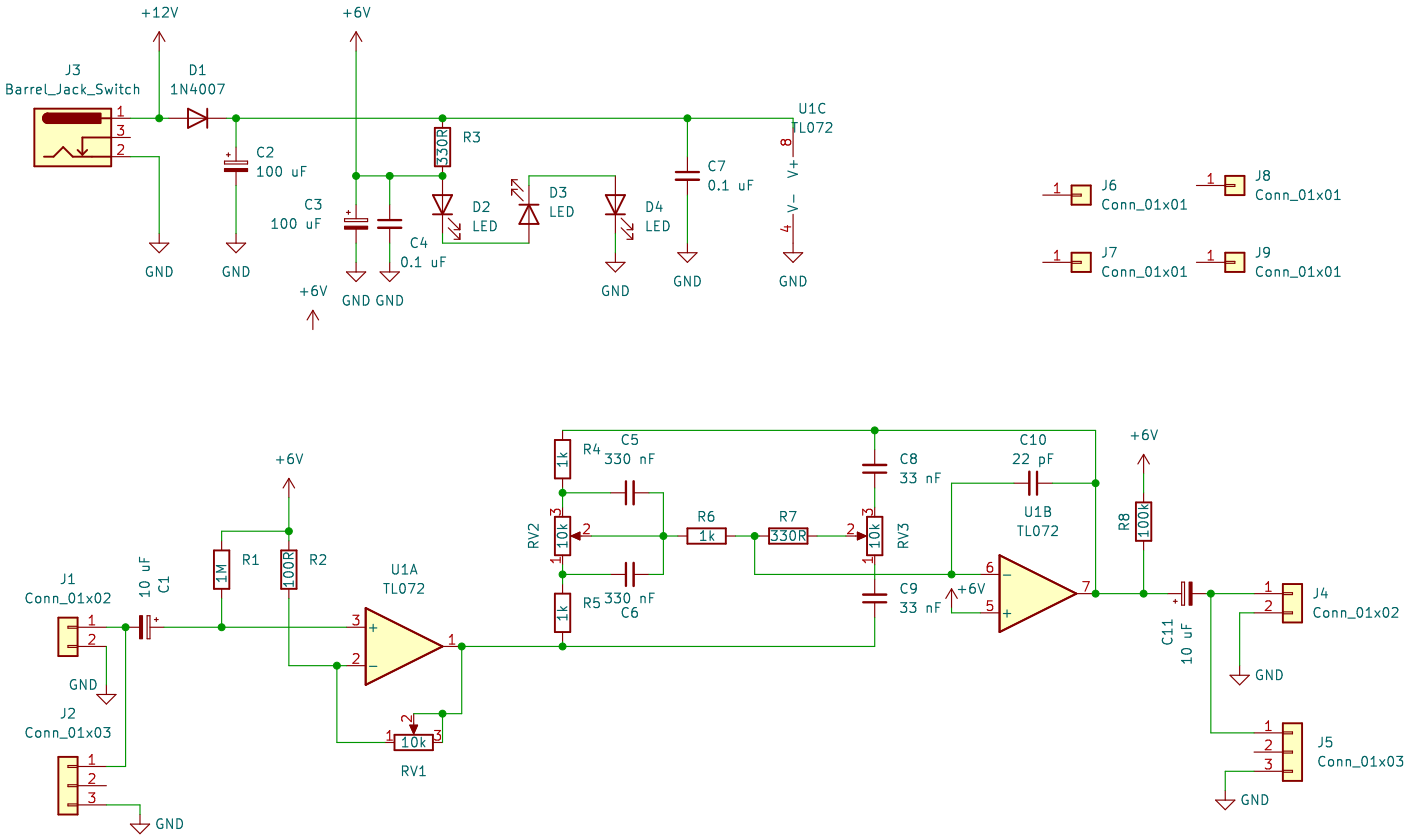

PIEZO JFET AMPLIFIER
FOR ACOUSTIC PHONOGRAPH
OR MUSICAL INSTRUMENTS
BY DANIEL MARKS V1
CC-BY-SA 4.0