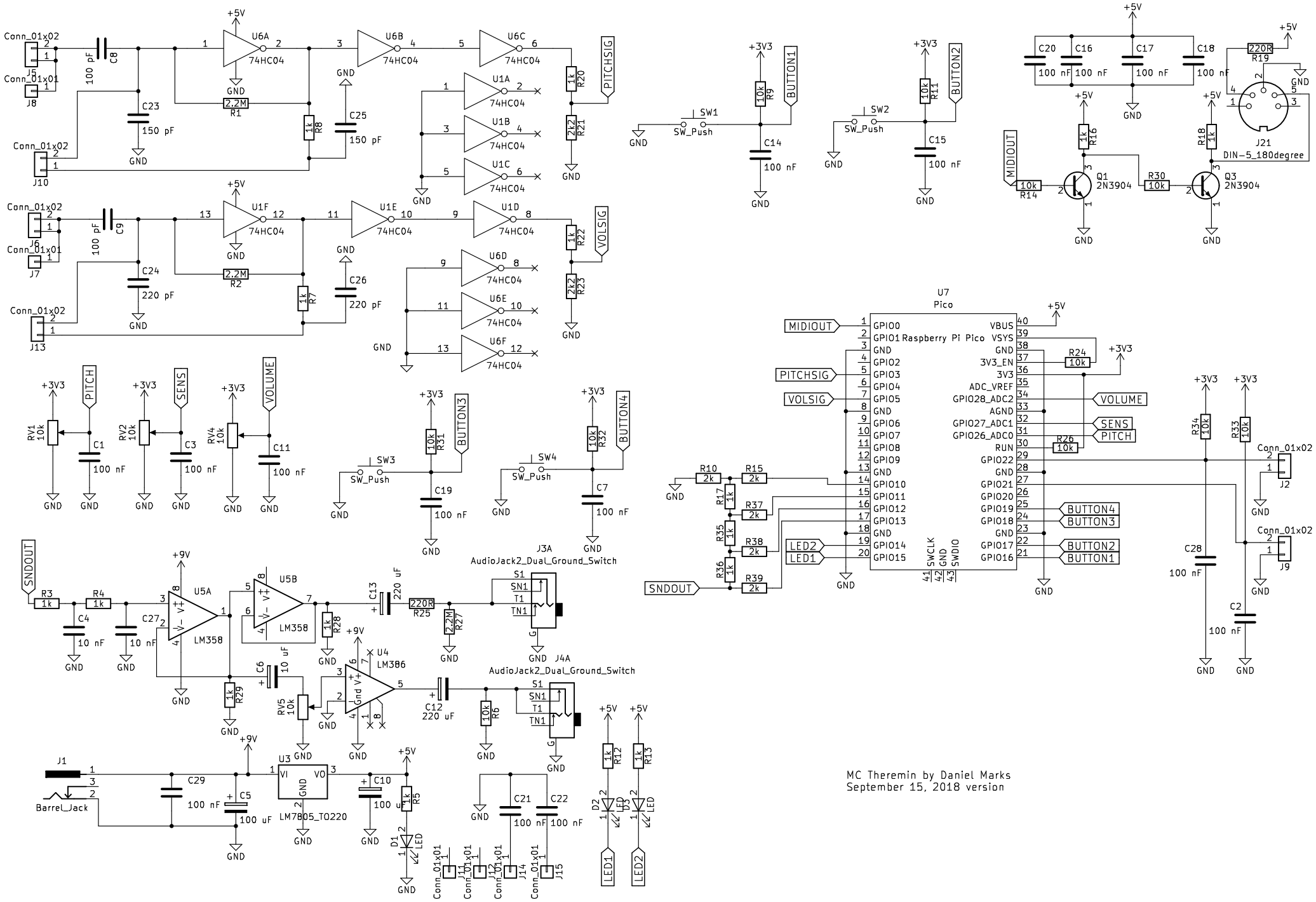
U7
Pico
Raspberry Pi Pico
MC Theremin by Daniel Marks
September 15, 2018 version