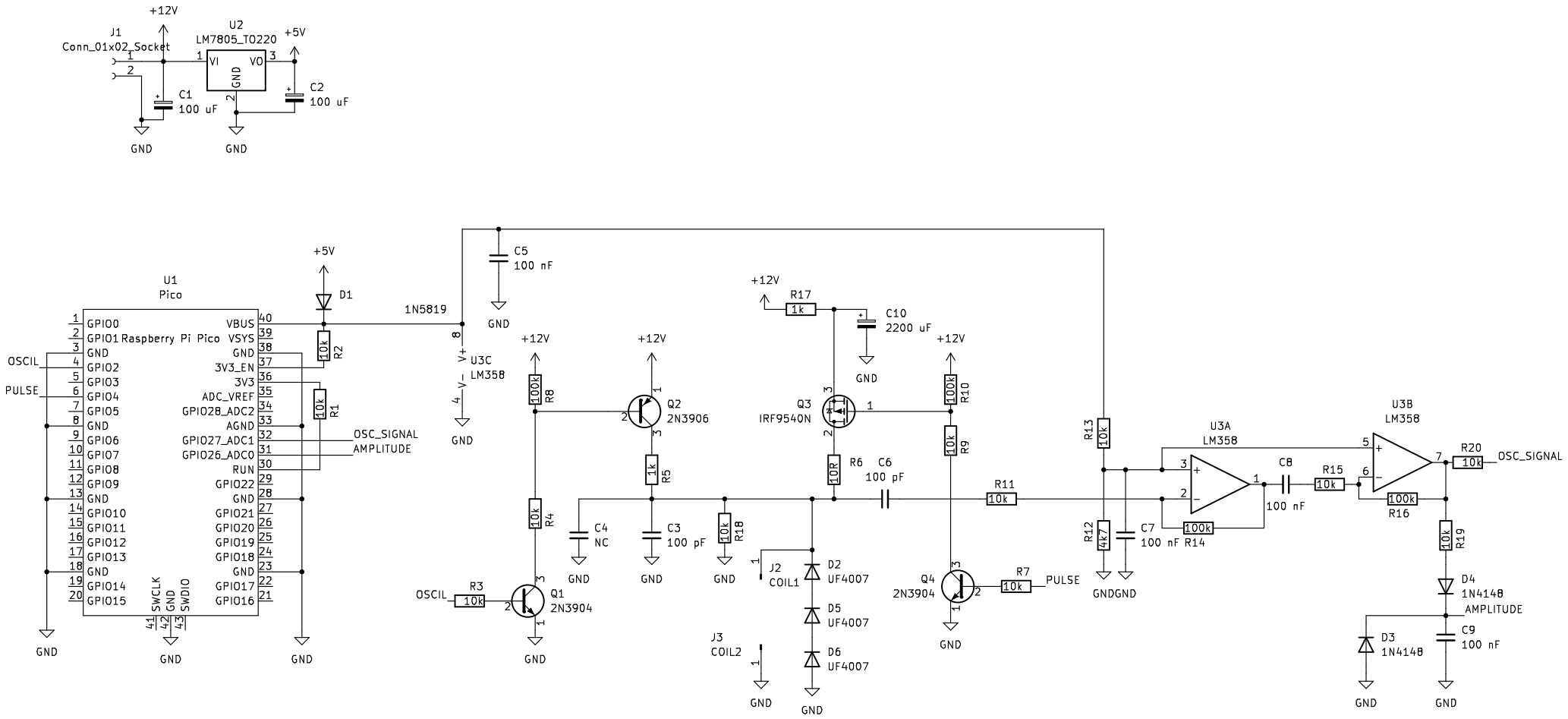
J1
Conn_01x02_Socket
+12V
U2
LM7805_TO220
+5V
VI
VO
GND
C1
100 uF
C2
100 uF
GND
GND
U1
Pico
Raspberry Pi Pico
GPIO0
GPIO1
GND
GPIO2
GPIO3
GPIO4
GPIO5
GND
GPIO6
GPIO7
GPIO8
GPIO9
GND
GPIO10
GPIO11
GPIO12
GPIO13
GND
GPIO14
GPIO15
VBUS
VSYS
GND
3V3_EN
3V3
ADC_VREF
GPIO28_ADC2
AGND
GPIO27_ADC1
GPIO26_ADC0
RUN
GPIO22
GND
GPIO21
GPIO20
GPIO19
GPIO18
GND
GPIO17
GPIO16
SWCLK
GND
SWDIO
OSCIL
PULSE
OSC_SIGNAL
AMPLITUDE
+5V
D1
1N5819
R2
10k
R1
10k
C5
100 nF
U3C
LM358
V+
V-
+12V
R8
100k
R4
10k
R3
10k
OSCIL
Q1
2N3904
Q2
2N3906
R5
1k
C4
NC
C3
100 pF
R18
10k
J2
COIL1
J3
COIL2
D2
UF4007
D5
UF4007
D6
UF4007
R17
1k
C10
2200 uF
Q3
IRF9540N
R6
10R
C6
100 pF
R10
100k
R9
10k
Q4
2N3904
R7
10k
PULSE
R11
10k
R13
10k
R12
4k7
C7
100 nF
U3A
LM358
R14
100k
C8
100 nF
R15
10k
U3B
LM358
R16
100k
R20
10k
OSC_SIGNAL
R19
10k
D4
1N4148
AMPLITUDE
D3
1N4148
C9
100 nF