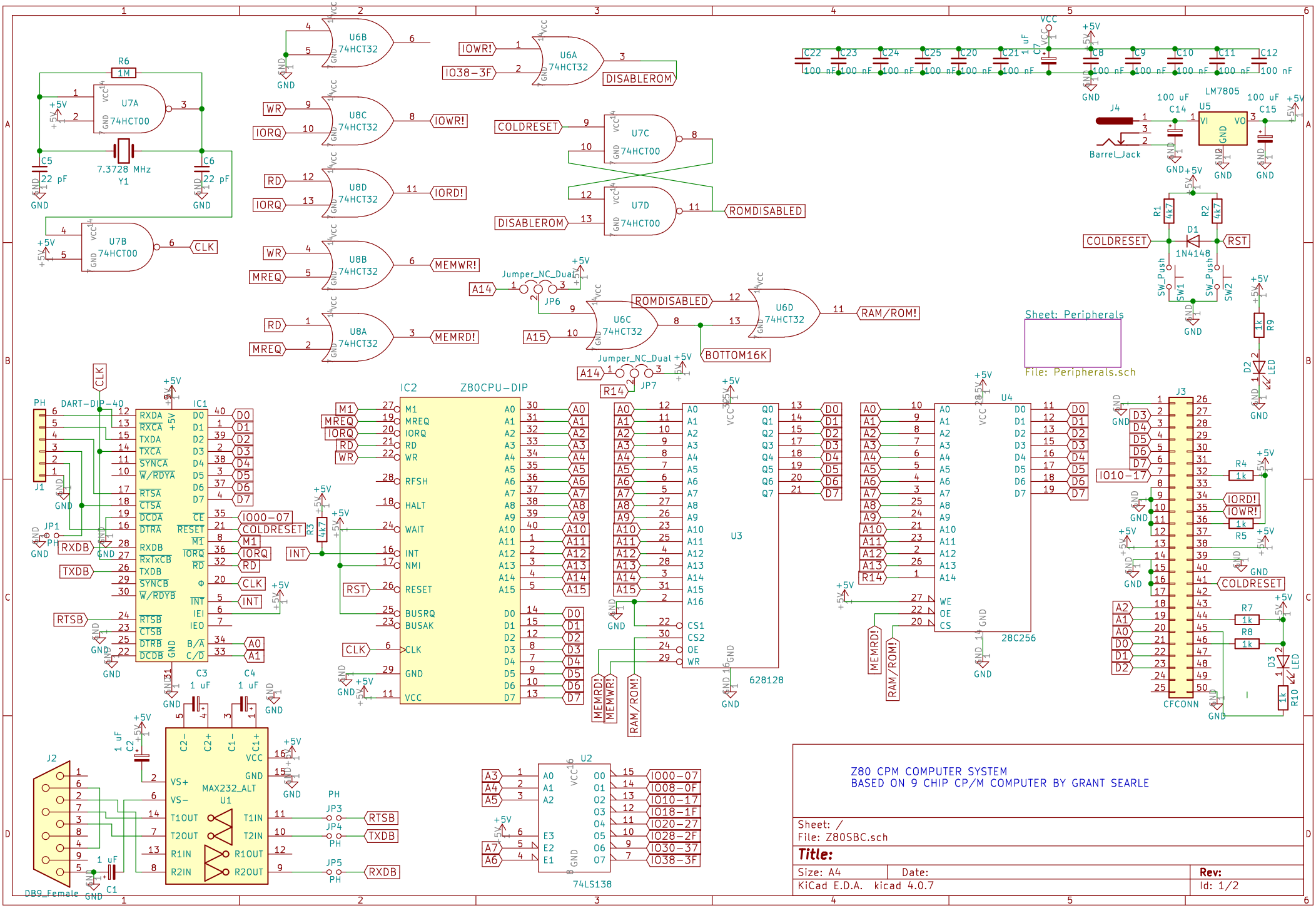
Z80 CPM COMPUTER SYSTEM
BASED ON 9 CHIP CP/M COMPUTER BY GRANT SEARLE
Sheet: /
File: Z80SBC.sch
Title:
Size: A4
Date:
Rev:
KiCad E.D.A. kicad 4.0.7
Id: 1/2
Sheet: Peripherals
File: Peripherals.sch
IC2
Z80CPU-DIP
IC1
DART-DIP-40
U3
628128
U4
28C256
U2
74LS138
U1
MAX232_ALT
J1
J2
DB9_Female
J3
CFCONN
J4
Barrel_Jack
U5
LM7805
U6A
U6B
U6C
U6D
U7A
U7B
U7C
U7D
U8A
U8B
U8C
U8D
7.3728 MHz
Y1
Jumper_NC_Dual
JP6
JP7
R14
BOTTOM16K
ROMDISABLED
RAM/ROM!
DISABLEROM
COLDRESET
RST
IOWR!
IO38-3F
IORD!
MEMWR!
MEMRD!
CLK
RXDB
TXDB
RTSB
INT
IO00-07
IO10-17
IO08-0F
IO18-1F
IO20-27
IO28-2F
IO30-37
IO38-3F
1N4148
SW_Push
LED

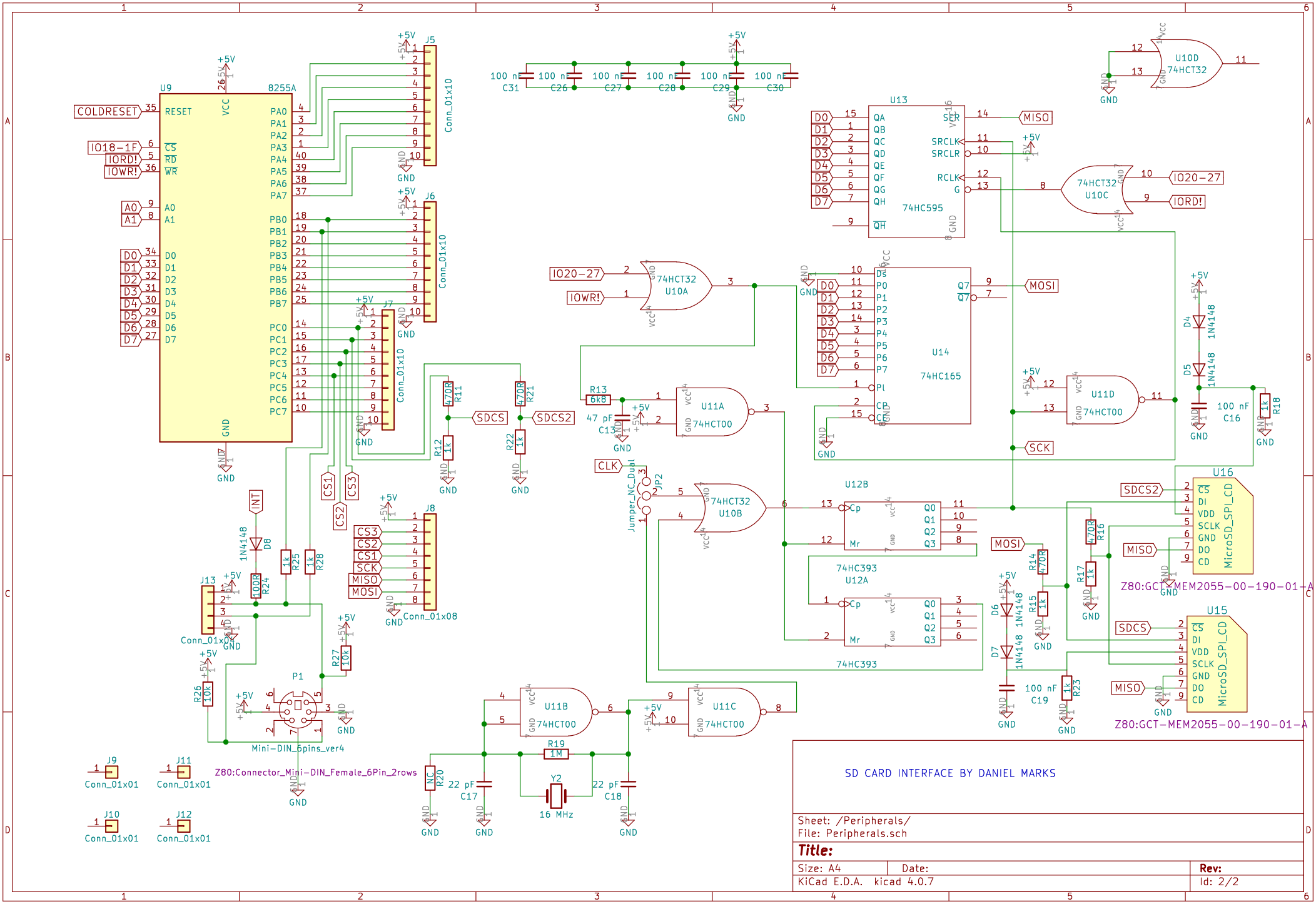
U9
8255A
COLDRESET
IO18-1F
IORD!
IOWR!
A0
A1
D0
D1
D2
D3
D4
D5
D6
D7
RESET
CS
RD
WR
VCC
GND
PA0
PA1
PA2
PA3
PA4
PA5
PA6
PA7
PB0
PB1
PB2
PB3
PB4
PB5
PB6
PB7
PC0
PC1
PC2
PC3
PC4
PC5
PC6
PC7
J5
J6
J7
J8
Conn_01x10
Conn_01x08
+5V
GND
INT
CS1
CS2
CS3
SCK
MISO
MOSI
SDCS
SDCS2
CLK
U13
74HC595
QA
QB
QC
QD
QE
QF
QG
QH
SRCLK
SRCLR
RCLK
G
U10D
74HCT32
U10C
IO20-27
U10A
U14
74HC165
P0
P1
P2
P3
P4
P5
P6
P7
Pl
CP
CE
Q7
U11A
U11B
U11C
U11D
74HCT00
U10B
U12B
U12A
74HC393
Cp
Mr
Q0
Q1
Q2
Q3
U16
U15
MicroSD_SPI_CD
Z80:GCT-MEM2055-00-190-01-A
Jumper_NC_Dual
JP2
P1
Mini-DIN_6pins_ver4
Z80:Connector_Mini-DIN_Female_6Pin_2rows
J9
J10
J11
J12
J13
Conn_01x01
Conn_01x02
Y2
16 MHz
R11
R12
R13
R14
R15
R16
R17
R18
R19
R20
R21
R22
R23
R24
R25
R26
R27
R28
470R
1k
6k8
1M
NC
10k
100R
C13
C16
C17
C18
C19
C26
C27
C28
C29
C30
C31
100 nF
47 pF
22 pF
D4
D5
D6
D7
D8
1N4148
SD CARD INTERFACE BY DANIEL MARKS
Sheet: /Peripherals/
File: Peripherals.sch
Title:
Size: A4
Date:
Rev:
KiCad E.D.A. kicad 4.0.7
Id: 2/2