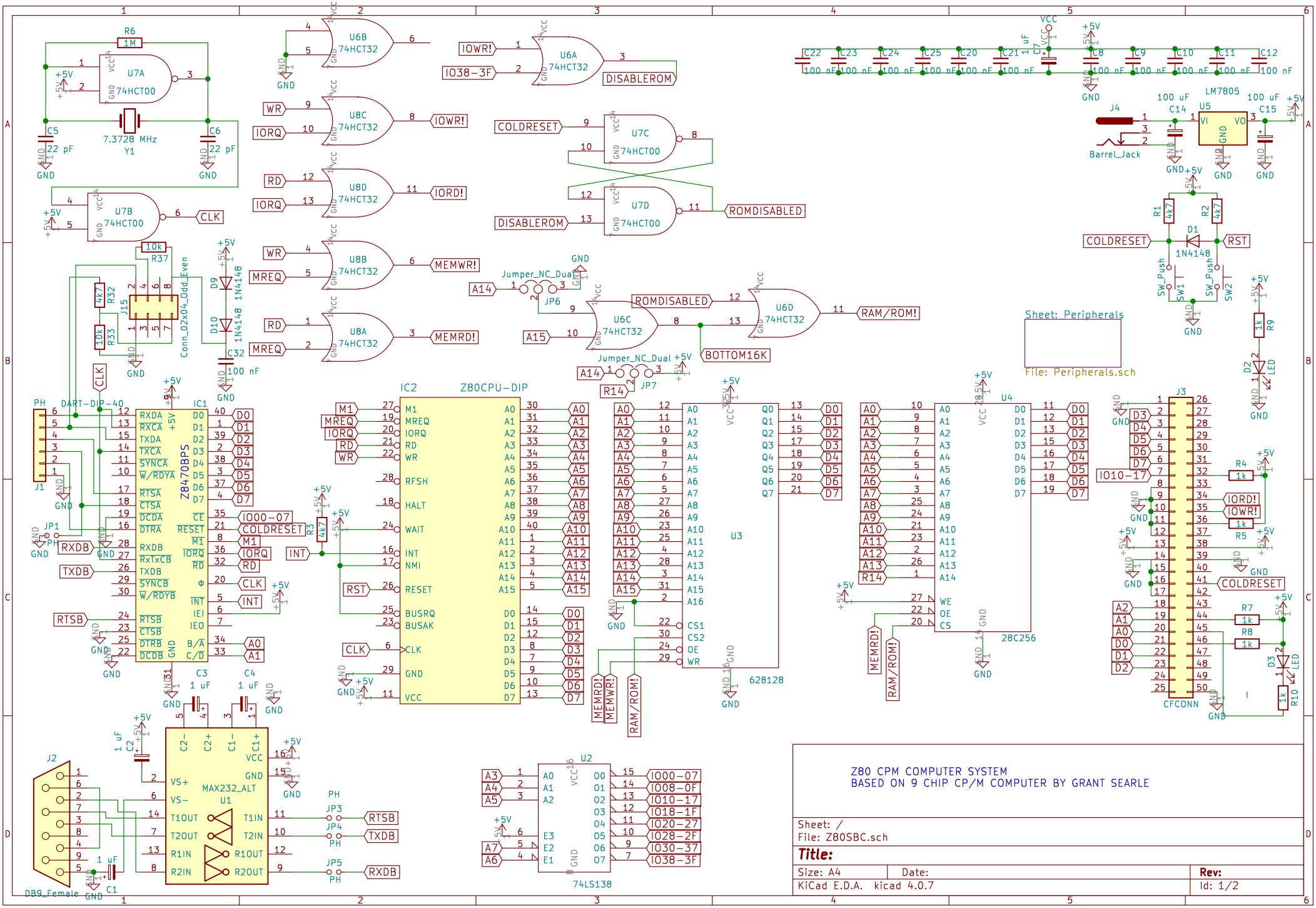
Z80 CPM COMPUTER SYSTEM
BASED ON 9 CHIP CP/M COMPUTER BY GRANT SEARLE
Sheet: /
File: Z80SBC.sch
Title:
Size: A4
Date:
Rev:
KiCad E.D.A. kicad 4.0.7
Id: 1/2
Sheet: Peripherals
File: Peripherals.sch
U7A 74HCT00
U7B 74HCT00
U7C 74HCT00
U7D 74HCT00
U6A 74HCT32
U6B 74HCT32
U6C 74HCT32
U6D 74HCT32
U8A 74HCT32
U8B 74HCT32
U8C 74HCT32
U8D 74HCT32
7.3728 MHz
Y1
IC1 Z84C70BPS
IC2 Z80CPU-DIP
U3 628128
U4 28C256
U1 MAX232_ALT
U2 74LS138
U5 LM7805
J1 DART-DIP-40
J2 DB9_Female
J3 CFCONN
J4 Barrel_Jack
J15 Conn_02x04_Odd_Even
Jumper_NC_Dual
1N4148
SW_Push
LED
DISABLEROM
ROMDISABLED
RAM/ROM!
BOTTOM16K
COLDRESET
RST
CLK
INT
IOWR!
IORD!
MEMWR!
MEMRD!
IO38-3F
IO10-17
IO00-07
RTSB
TXDB
RXDB

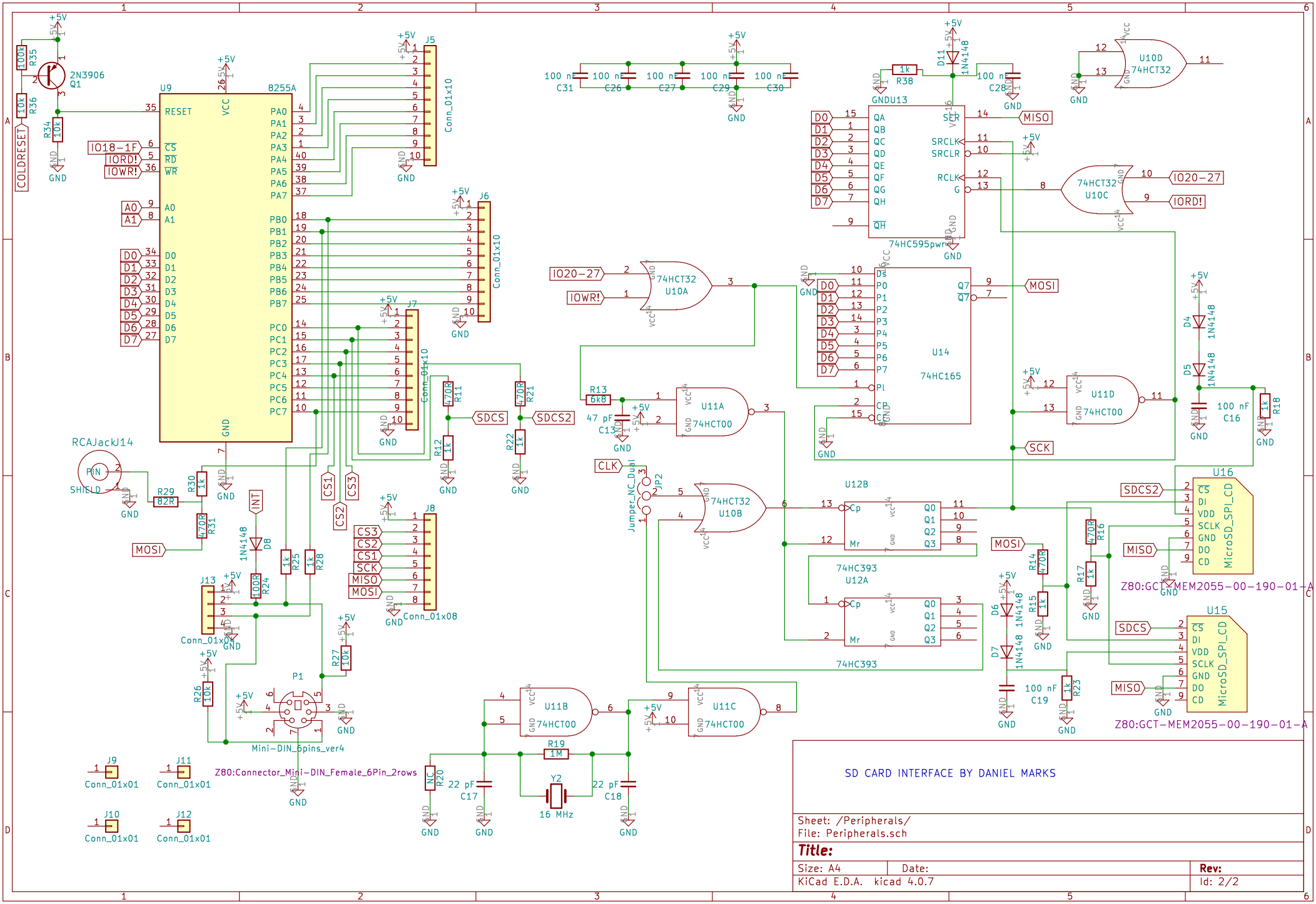
U9
8255A
RESET
VCC
GND
PA0
PA1
PA2
PA3
PA4
PA5
PA6
PA7
PB0
PB1
PB2
PB3
PB4
PB5
PB6
PB7
PC0
PC1
PC2
PC3
PC4
PC5
PC6
PC7
CS
RD
WR
A0
A1
D0
D1
D2
D3
D4
D5
D6
D7
IO18-1F
IORD!
IOWR!
COLDRESET
2N3906
Q1
R35
R36
R34
J5
J6
J7
J8
Conn_01x10
Conn_01x08
RCAJack14
PIN
SHIELD
R29
82R
R30
R31
470R
INT
1N4148
D8
R24
100R
R25
R28
R27
10k
R26
J13
Conn_01x04
P1
Mini-DIN_6pins_ver4
Z80:Connector_Mini-DIN_Female_6Pin_2rows
J9
J10
J11
J12
Conn_01x01
CS1
CS2
CS3
SCK
MISO
MOSI
SDCS
SDCS2
R11
R12
R21
R22
100 nF
C31
C26
C27
C29
C30
C28
U13
74HC595pwr
SER
SRCLK
SRCLR
RCLK
G
QH
R38
D11
U10D
74HCT32
U10C
IO20-27
IORD!
U10A
IOWR!
U14
74HC165
Ds
Pl
CP
CE
Q7
U11D
74HCT00
D4
D5
R18
C16
R13
6k8
47 pF
C13
U11A
CLK
Jumper_NC_Dual
JP2
U10B
U12B
74HC393
U12A
Cp
Mr
Q0
Q1
Q2
Q3
R14
R15
R16
R17
D6
D7
C19
R23
U16
U15
MicroSD_SPI_CD
CS
DI
VDD
SCLK
GND
DO
CD
Z80:GCT-MEM2055-00-190-01-A
U11B
U11C
R19
1M
Y2
16 MHz
22 pF
C17
C18
NC
R20
SD CARD INTERFACE BY DANIEL MARKS
Sheet: /Peripherals/
File: Peripherals.sch
Title:
Size: A4
Date:
Rev:
KiCad E.D.A. kicad 4.0.7
Id: 2/2