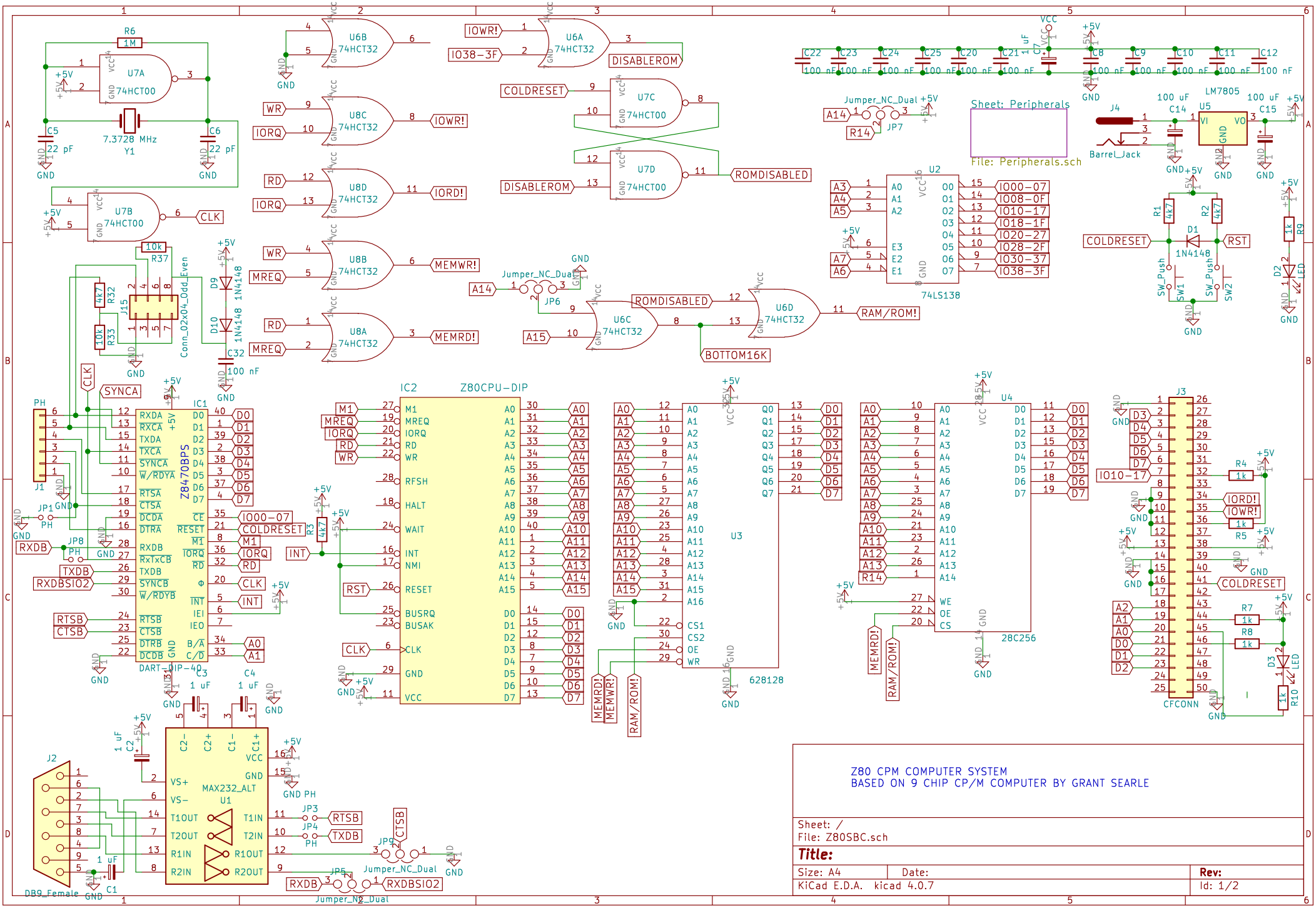
Z80 CPM COMPUTER SYSTEM
BASED ON 9 CHIP CP/M COMPUTER BY GRANT SEARLE
Sheet: /
File: Z80SBC.sch
Title:
Size: A4
Date:
Rev:
KiCad E.D.A. kicad 4.0.7
Id: 1/2
Sheet: Peripherals
File: Peripherals.sch
IC2 Z80CPU-DIP
IC1 Z8470BPS
DART-DIP-40
U1 MAX232_ALT
U2 74LS138
U3 628128
U4 28C256
J3 CFCONN
J2 DB9_Female
J1
J15 Conn_02x04_Odd_Even
U5 LM7805
J4 Barrel_Jack
Y1 7.3728 MHz
U7A 74HCT00
U7B 74HCT00
U7C 74HCT00
U7D 74HCT00
U6A 74HCT32
U6B 74HCT32
U6C 74HCT32
U6D 74HCT32
U8A 74HCT32
U8B 74HCT32
U8C 74HCT32
U8D 74HCT32
IOWR!
IO38-3F
DISABLEROM
COLDRESET
ROMDISABLED
WR
IORQ
RD
MREQ
IORD!
MEMWR!
MEMRD!
CLK
A14
A15
BOTTOM16K
RAM/ROM!
IO00-07
IO08-0F
IO10-17
IO18-1F
IO20-27
IO28-2F
IO30-37
IO38-3F
SYNCA
INT
RST
RXDB
TXDB
RXDBSIO2
RTSB
CTSB
MEMWR!
MEMRD!
RAM/ROM!
RST
LED
SW_Push
Jumper_NC_Dual
DB9_Female

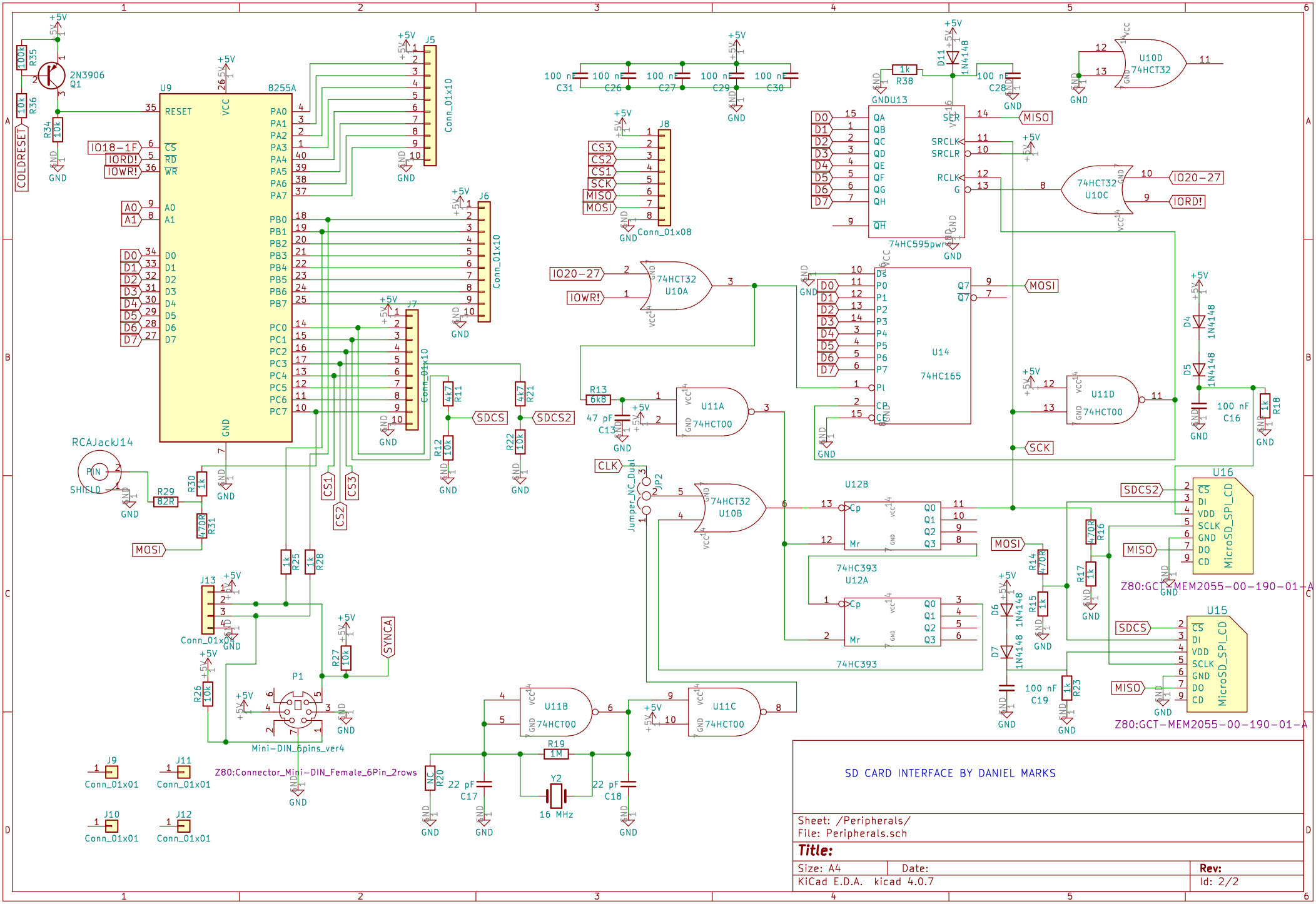
U9
8255A
RESET
VCC
GND
PA0
PA1
PA2
PA3
PA4
PA5
PA6
PA7
PB0
PB1
PB2
PB3
PB4
PB5
PB6
PB7
PC0
PC1
PC2
PC3
PC4
PC5
PC6
PC7
CS
RD
WR
A0
A1
D0
D1
D2
D3
D4
D5
D6
D7
IO18-1F
IORD!
IOWR!
COLDRESET
2N3906
Q1
R35
100k
R36
10k
R34
10k
J5
Conn_01x10
J6
Conn_01x10
J7
Conn_01x10
J8
Conn_01x08
CS3
CS2
CS1
SCK
MISO
MOSI
U13
74HC595pwr
SER
SRCLK
SRCLR
RCLK
G
QH
R38
1k
D11
1N4148
C28
100 nF
U10D
74HCT32
U10C
74HCT32
IO20-27
IORD!
U14
74HC165
Ds
P0
P1
P2
P3
P4
P5
P6
P7
Pl
CP
CE
Q7
U10A
74HCT32
IO20-27
IOWR!
U11A
74HCT00
R13
6k8
C13
47 pF
U11D
74HCT00
D4
1N4148
D5
1N4148
C16
100 nF
R18
1k
R11
4k7
R21
4k7
R12
10k
R22
10k
SDCS
SDCS2
CLK
JP2
Jumper_NC_Dual
U10B
74HCT32
U12B
74HC393
Cp
Mr
Q0
Q1
Q2
Q3
U12A
74HC393
R14
470R
R15
1k
R16
470R
R17
1k
D6
1N4148
D7
1N4148
C19
100 nF
R23
1k
U16
MicroSD_SPI_CD
CS
DI
VDD
SCLK
GND
DO
CD
Z80:GCT_MEM2055-00-190-01-A
U15
MicroSD_SPI_CD
Z80:GCT_MEM2055-00-190-01-A
RCAJack14
PIN
SHIELD
R29
82R
R30
1k
R31
470R
MOSI
R25
1k
R28
1k
J13
Conn_01x04
R26
10k
R27
10k
SYNCA
P1
Mini-DIN_6pins_ver4
Z80:Connector_Mini-DIN_Female_6Pin_2rows
J9
Conn_01x01
J11
Conn_01x01
J10
Conn_01x01
J12
Conn_01x01
U11B
74HCT00
U11C
74HCT00
R19
1M
R20
NC
C17
22 pF
C18
22 pF
Y2
16 MHz
C31
100 nF
C26
100 nF
C27
100 nF
C29
100 nF
C30
100 nF
SD CARD INTERFACE BY DANIEL MARKS
Sheet: /Peripherals/
File: Peripherals.sch
Title:
Size: A4
Date:
Rev:
KiCad E.D.A. kicad 4.0.7
Id: 2/2