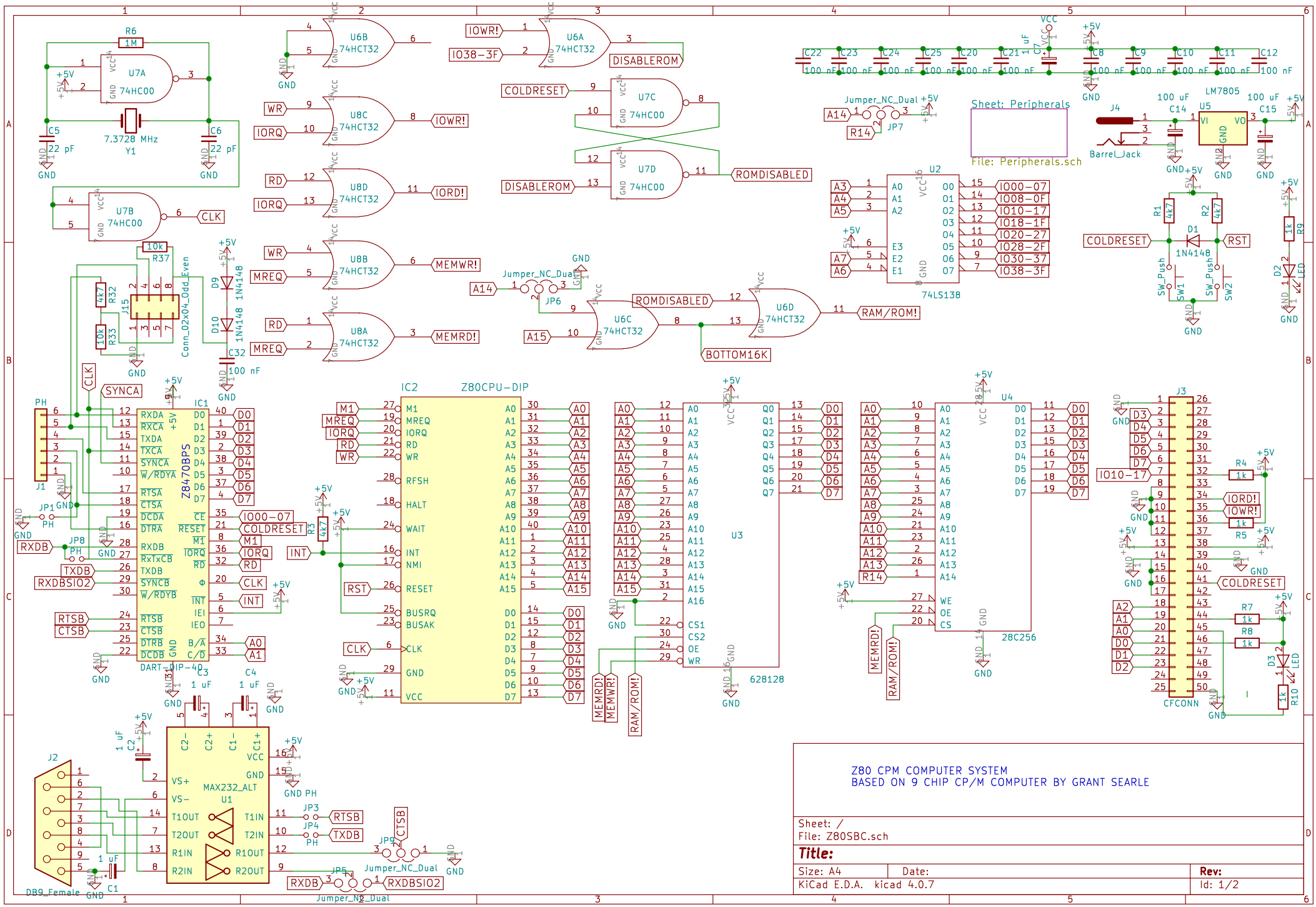
Z80 CPM COMPUTER SYSTEM
BASED ON 9 CHIP CP/M COMPUTER BY GRANT SEARLE
Sheet: /
File: Z80SBC.sch
Title:
Size: A4
Date:
Rev:
KiCad E.D.A. kicad 4.0.7
Id: 1/2
Sheet: Peripherals
File: Peripherals.sch
IC2 Z80CPU-DIP
IC1 Z8470BPS
DART-DIP-40
U1 MAX232_ALT
U2 74LS138
U3 628128
U4 28C256
J3 CFCONN
J2 DB9_Female
J1 PH
J15 Conn_02x04_Odd_Even
U5 LM7805
J4 Barrel_Jack
U7A 74HC00
U7B 74HC00
U7C 74HC00
U7D 74HC00
U6A 74HC32
U6B 74HC32
U6C 74HC32
U6D 74HC32
U8A 74HC32
U8B 74HC32
U8C 74HC32
U8D 74HC32
7.3728 MHz
Y1
DISABLEROM
ROMDISABLED
BOTTOM16K
RAM/ROM!
MEMWR!
MEMRD!
IOWR!
IORD!
MEMWR!
MEMRD!
IO38-3F
IO10-17
IO00-07
IO08-0F
IO18-1F
IO20-27
IO28-2F
IO30-37
COLDRESET
RST
CLK
SYNCA
INT
RTSB
CTSB
TXDB
RXDB
RXDBSIO2
Jumper_NC_Dual
JP6
JP7
JP8
JP9
JP1
JP3
JP4
JP5
LED
SW_Push
SW1
SW2
1N4148
LED

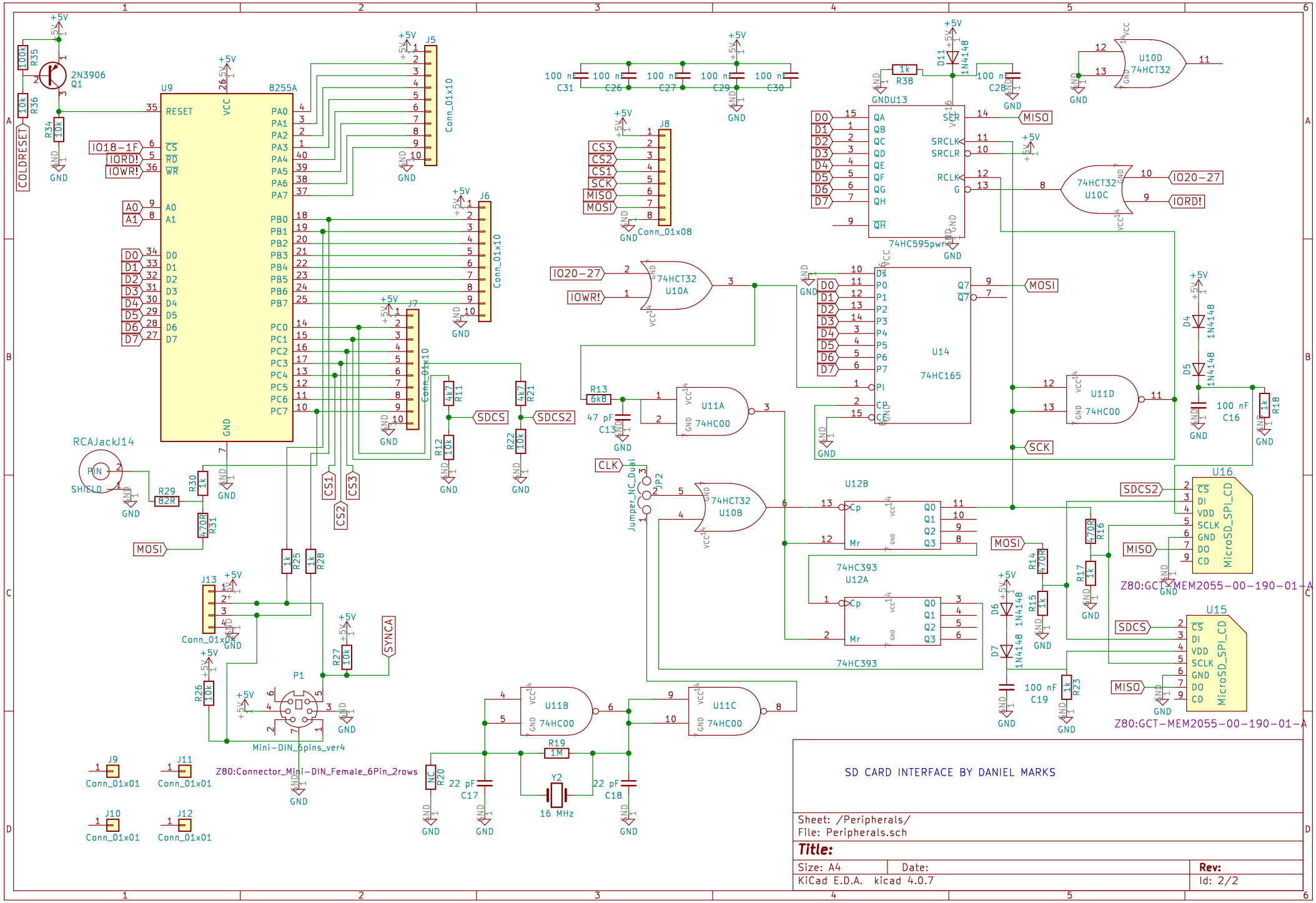

SD CARD INTERFACE BY DANIEL MARKS

Sheet: /Peripherals/
File: Peripherals.sch

Title:

Size: A4	Date:	**Rev:**
KiCad E.D.A. kicad 4.0.7		Id: 2/2