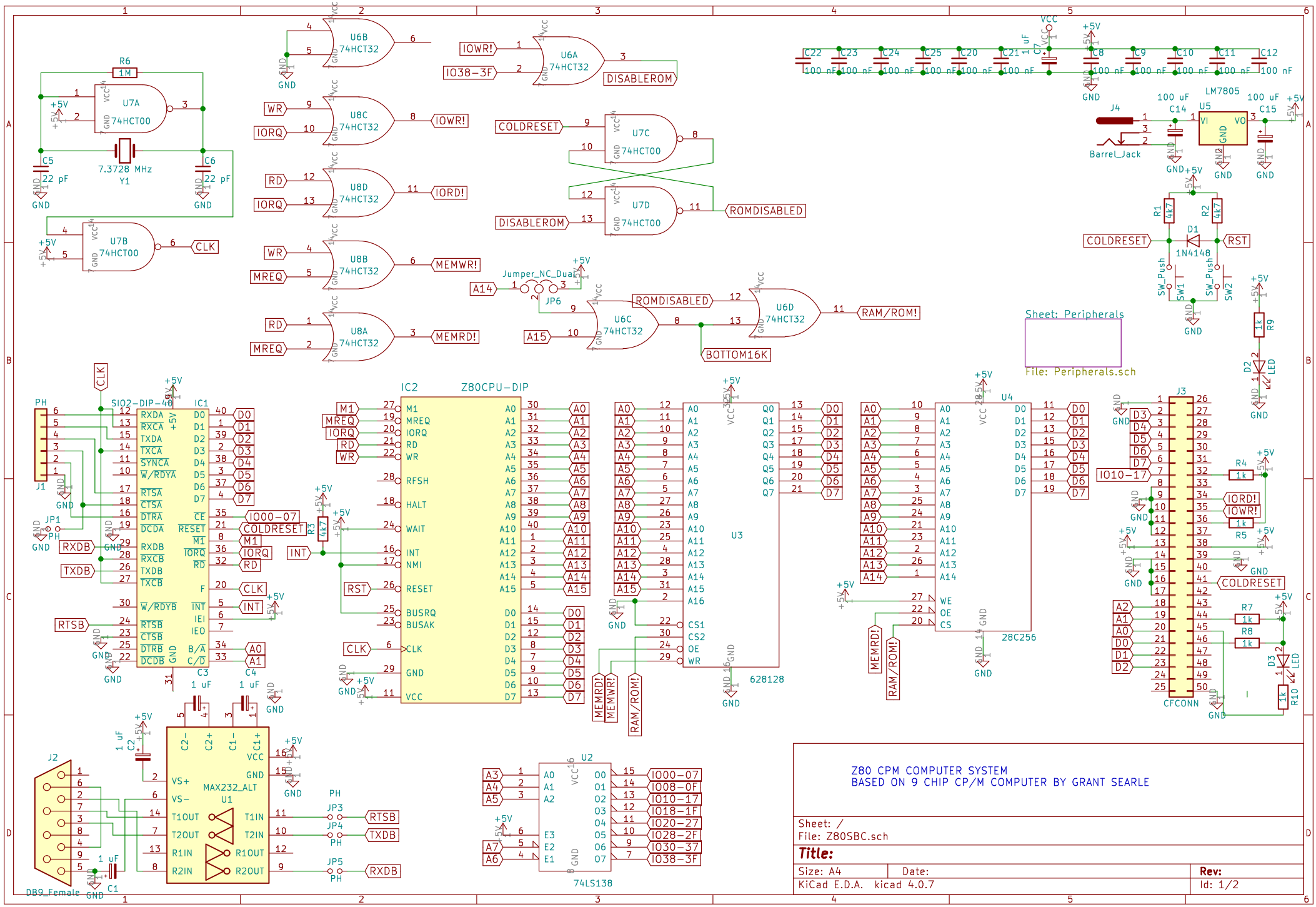
Z80 CPM COMPUTER SYSTEM
BASED ON 9 CHIP CP/M COMPUTER BY GRANT SEARLE
Sheet: /
File: Z80SBC.sch
Title:
Size: A4
Date:
Rev:
KiCad E.D.A. kicad 4.0.7
Id: 1/2
Sheet: Peripherals
File: Peripherals.sch
U6B 74HCT32
U6A 74HCT32
U8C 74HCT32
U8D 74HCT32
U8B 74HCT32
U8A 74HCT32
U7A 74HCT00
U7B 74HCT00
U7C 74HCT00
U7D 74HCT00
U6C 74HCT32
U6D 74HCT32
R6 1M
7.3728 MHz
Y1
C5 22 pF
C6 22 pF
IOWR!
IO38-3F
DISABLEROM
WR
IORQ
IOWR!
RD
IORD!
MEMWR!
MREQ
MEMRD!
COLDRESET
ROMDISABLED
Jumper_NC_Dual
JP6
A14
A15
BOTTOM16K
RAM/ROM!
CLK
LM7805
U5
J4
Barrel_Jack
C14 100 uF
C15 100 uF
C22 100 nF
C23 100 nF
C24 100 nF
C25 100 nF
C20 100 nF
C21 100 nF
C7 1 uF
C8 100 nF
C9 100 nF
C10 100 nF
C11 100 nF
C12 100 nF
R1 4k7
R2 4k7
D1 1N4148
RST
SW_Push
SW1
SW2
R9 1k
D2 LED
PH
J1
JP1
RXDB
TXDB
RTSB
SIO2-DIP-40
IC1
IO00-07
INT
R3 4k7
IC2
Z80CPU-DIP
U3
628128
U4
28C256
J3
CFCONN
IO10-17
IORD!
IOWR!
R4 1k
R5 1k
R7 1k
R8 1k
R10 1k
D3 LED
C3 1 uF
C4 1 uF
C2 1 uF
C1 1 uF
J2
DB9_Female
MAX232_ALT
U1
JP3
JP4
JP5
U2
74LS138
IO00-07
IO08-0F
IO10-17
IO18-1F
IO20-27
IO28-2F
IO30-37
IO38-3F

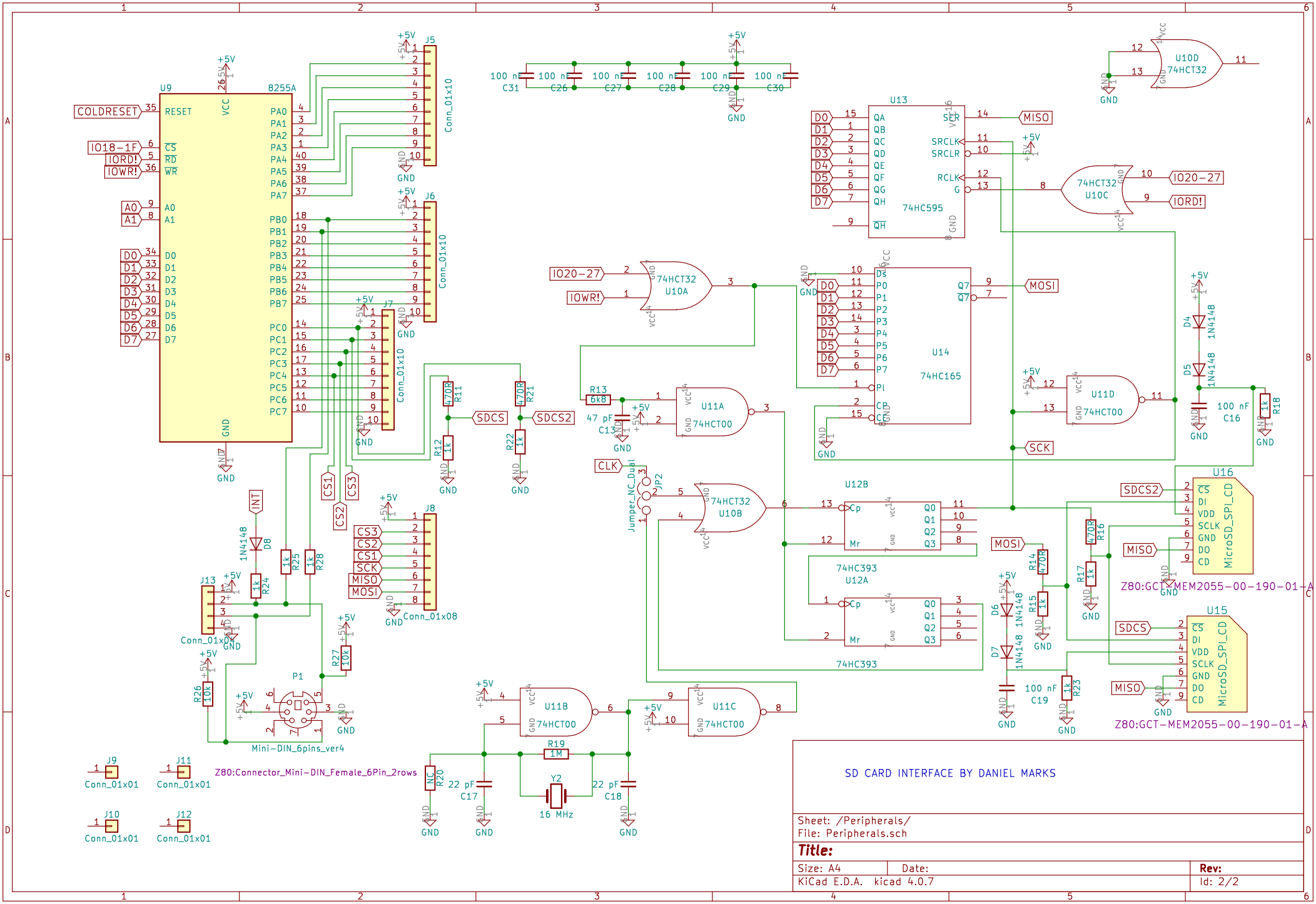
U9
8255A
COLDRESET
IO18-1F
IORD!
IOWR!
A0
A1
D0
D1
D2
D3
D4
D5
D6
D7
RESET
CS
RD
WR
VCC
GND
PA0
PA1
PA2
PA3
PA4
PA5
PA6
PA7
PB0
PB1
PB2
PB3
PB4
PB5
PB6
PB7
PC0
PC1
PC2
PC3
PC4
PC5
PC6
PC7
J5
J6
J7
J8
Conn_01x10
Conn_01x08
CS1
CS2
CS3
SCK
MISO
MOSI
INT
SDCS
SDCS2
CLK
U13
74HC595
QA
QB
QC
QD
QE
QF
QG
QH
SRCLK
SRCLR
RCLK
G
U10D
74HCT32
U10C
IO20-27
U10A
U14
74HC165
P0
P1
P2
P3
P4
P5
P6
P7
Pl
CP
U11A
U11B
U11C
U11D
74HCT00
U10B
U12B
U12A
74HC393
Cp
Mr
Q0
Q1
Q2
Q3
JP2
Jumper_NC_Dual
U16
U15
MicroSD_SPI_CD
Z80:GCT-MEM2055-00-190-01-A
P1
Mini-DIN_6pins_ver4
Z80:Connector_Mini-DIN_Female_6Pin_2rows
J9
J10
J11
J12
J13
Conn_01x01
Conn_01x06
Y2
16 MHz
R19
1M
R20
NC
C17
22 pF
C18
22 pF
R13
6k8
C13
47 pF
R11
470R
R12
1k
R21
470R
R22
1k
R24
1k
R25
1k
R28
1k
R26
10k
R27
10k
D8
1N4148
D4
1N4148
D5
1N4148
D6
1N4148
D7
1N4148
C16
100 nF
C19
100 nF
R14
470R
R15
1k
R16
470R
R17
1k
R18
1k
R23
1k
C31
100 nF
C26
100 nF
C27
100 nF
C28
100 nF
C29
100 nF
C30
100 nF
+5V
GND
SD CARD INTERFACE BY DANIEL MARKS
Sheet: /Peripherals/
File: Peripherals.sch
Title:
Size: A4
Date:
Rev:
KiCad E.D.A. kicad 4.0.7
Id: 2/2