Optical Fiber Technology 90 (2025) 104105

Contents lists available at ScienceDirect

Optical Fiber Technology

journal homepage: www.elsevier.com/locate/yofte

Regular Articles

Broadband tunable PM holmium doped ring fiber laser for the 2000–2100 nm band

Juan A. Zepeda-Galvez *, Wiktor Walasik, Robert E. Tench, Alexandre Amavigan, Jean-Marc Delavaux

Cybel LLC, 62 Highland Avenue, Bethlehem, PA, 18017 USA

ARTICLE INFO

Keywords:
Ring Fiber Laser
Tunable fiber laser
Holmium doped fiber

ABSTRACT

We report the experimental performance of a tunable polarization-maintaining (PM) holmium-doped fiber ring laser, followed by a single-clad single-stage holmium-doped fiber amplifier. An average output power of 1.6 W over a tuning range of 100 nm (from 2000 to 2100 nm) was obtained for 6.5 W of total launched pump power at 1860 nm, corresponding to an optical-to-optical efficiency of 32 %. We measured an optical signal-to-noise ratio (OSNR) larger than 42 dB/0.05 nm and a polarization extinction ratio (PER) larger than 19.6 dB. The long-term power stability exhibited a peak-to-peak variation of 1.2 % over 2 h, and the experimentally measured spectral width of the laser was 530 MHz.

1. Introduction

High-power fiber lasers and fiber amplifiers operating in the eye-safe 2–2.1 μm band are important for many emerging applications including LIDAR, optical telecommunications, medical, gravitational wave detection, and spectral sensing [1–7]. This spectral band coincides with holmium-doped fiber (HDF) and thulium-doped fiber (TDF) emission bands and thus, has been the subject of intense research [8–19].

Several HDF- and TDF-based tunable lasers operating in the 2——2.1 μm band have been reported in the past decade. For example, in [20], a 107 nm range (from 1943 to 2050 nm) TDF tunable laser was demonstrated with an output power in the kW range. However, this laser was non-polarization maintaining (non-PM), which made it less desirable for certain applications. In [11], a Tm/Ho-codoped fiber laser with a 303 nm tunability range, from 1727 to 2030 nm and an output power of up to 408mW was reported by employing a ring cavity and a tunable filter. This tunable laser, however, was non-PM and lacked an output isolator to prevent self-lasing due to unwanted back reflections. As a third example, a free space HDF ring laser cavity was presented in [21], operating in the 2025–2200 nm band with an output power of 8.9 W and a maximum slope efficiency of 58 %, obtained at 2200 nm. However, this laser did not operate in an all-fiber configuration, which is preferable for some applications.

In contrast to these remarkable laser publications, our laser configuration consists of an all-fiber polarization-maintaining (PM) holmium-doped fiber tunable ring laser (HTRL) operating in the 2000–2100 nm band, amplified by a single-stage holmium-doped fiber amplifier (HDFA), and integrated into a practical compact package (200x150x43mm^3). Clearly, such a tunable source can be used to test fiber amplifiers and other optical component bandwidths. It can also serve in a MOPA arrangement where a broader linewidth source is needed to prevent impairments due to fiber nonlinearities such as stimulated Brillouin scattering (SBS).

Our manuscript is organized as follows: Section 2 describes the configuration of the fiber laser and the experimental setup used for its characterization. Section 3 presents the performance of the HTRL alone. Finally, section 4 shows the performance of the HTRL amplified by the HDFA.

2. Experimental setup

The PM tunable fiber laser architecture is shown in Fig. 1. The laser is made up of an HTRL followed by a single-stage HDFA. The HTRL is powered by an 1860 nm pump fiber laser that can produce up to 6.7 W of output power. The pump fiber laser is a TDF linear cavity laser with a 0.2 nm linewidth and an optical signal-to-noise ratio (OSNR) greater than 50 dB/1nm. The 1860 nm fiber laser is powered by a 1567 nm Er/Yb-doped linear cavity fiber laser that can deliver up to 11.5 W of optical power. The pump fiber laser is split by a 30/70 passive coupler (C1) to counter-pump both the ring laser and the amplifier, using fiber

* Corresponding author.
E-mail address: adrian.zepeda-galvez@cybel-llc.com (J.A. Zepeda-Galvez).

https://doi.org/10.1016/j.yofte.2024.104105
Received 26 August 2024; Received in revised form 24 October 2024; Accepted 10 December 2024
Available online 26 December 2024
1068-5200/© 2024 Elsevier Inc. All rights are reserved, including those for text and data mining, AI training, and similar technologies.

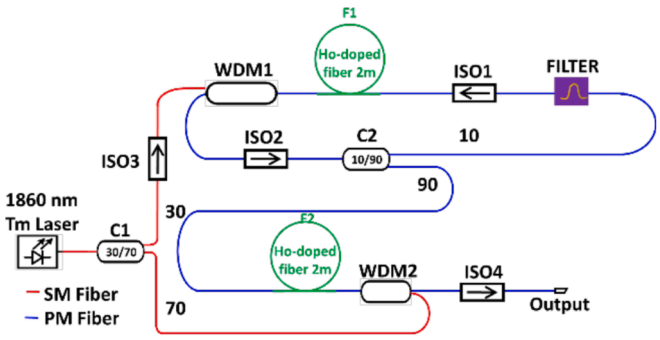

Fig. 1. Configuration of the HTRL, followed by the HDFA.

wavelength division multiplexers WDM1 and WDM2, respectively. Both the ring laser and the amplifier utilize a 2 m long (i.e. F1 and F2), 8 μm core size PM HDF from Exail (IXF-HDF-PM-8–125). The WDM1 combines the pump and the signal wavelengths, used to counter-pump the active fiber (F1). The narrow band electrically tunable wavelength filter (ETWF) with a 3 dB bandwidth of 500 MHz covers a range of 100 nm, with a tuning resolution of 0.1 nm and a tuning speed of 2.1 nm/s. Iso1 and Iso3 are isolators centered at 2050 nm that ensure unidirectional propagation and minimize external feedback. Iso2 is an isolator centered at 1850 nm that prevents unwanted reflections from the residual pump after it is absorbed by F1. The signal is then coupled out from the ring by a 90/10 passive tap coupler (C2), where 90 % of the total power is out-coupled and used to seed the HDFA booster. The HDFA consists of WDM2 which is used to counter-pump the active fiber (F2) with 70 % of the 1860 nm pump power. Finally, the amplified ring laser output exits via Iso4.

3. Ring laser performance

In the first part of the evaluation of our fiber laser configuration, we tested the performance of the tunable ring laser alone, without the booster amplifier as shown in Fig. 2. The measured component insertion losses (IL) were 1 and 1.1 dB for WDM1 at 2050 nm and 1860 nm, respectively; Iso1, Iso2, and Iso3 had IL of 0.85, 0.87, and 1 dB, respectively; and C1 had an excess loss of 0.26 dB.

Fig. 3a shows the signal output power measured at the 90 % port of C2 as a function of the 1860 nm pump power entering the ring, with the tunable filter positioned at $\lambda_{set} = 2050$ nm. The output power increases linearly with the pump power with an optical-to-optical power conversion efficiency (defined as the slope in the plot of Fig. 3a) of 18 % and a lasing threshold of 0.47 W. In Fig. 3b we have graphed the output power as a function of the filter center wavelength for a constant pump power of 1.41 W. It can be seen as confirmed by the simulation curve that the power versus operating wavelength exhibits a parabolic dependence with a maximum value of 140mW at $\lambda_{set} = 2080$ nm. This parabolic dependence follows the gain spectrum of the Ho-doped fiber

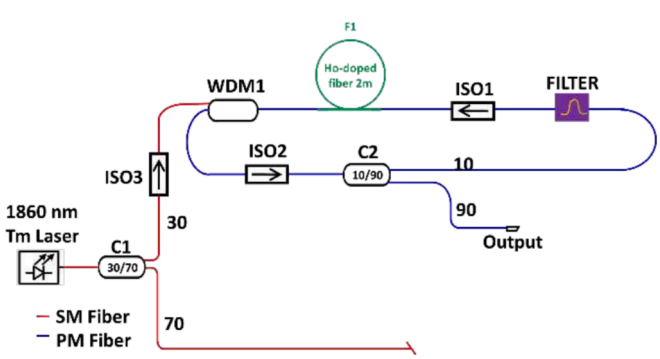

Fig. 2. Configuration of the HTRL.

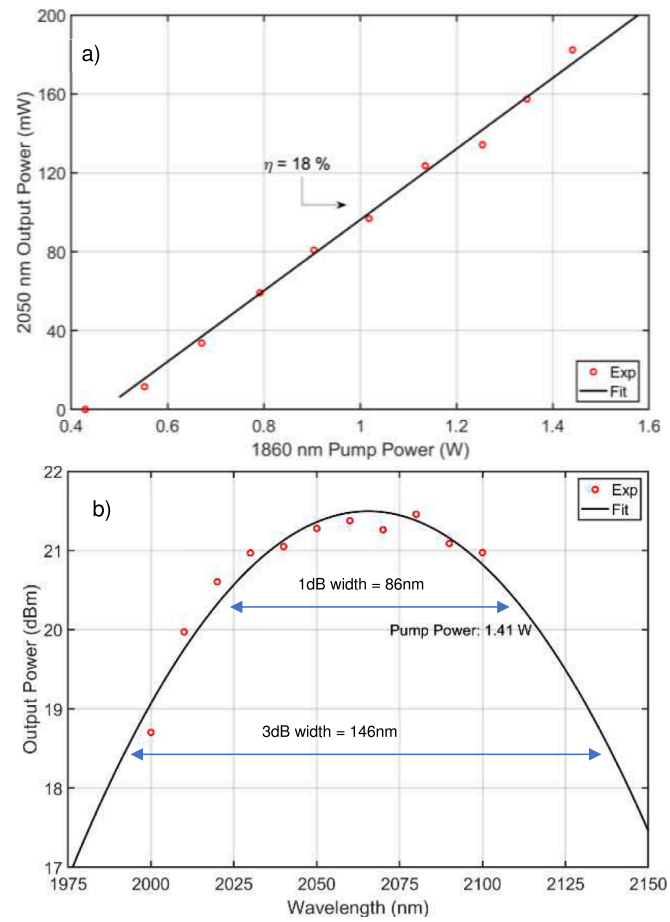

Fig. 3. A) output power versus 1860 nm pump power at 2050 nm. b) Output power as a function of the set wavelength.

[18]. The 1 dB and 3 dB tunable bandwidths are 86 nm and 146 nm, respectively. It is clear that with a wider bandwidth filter, the tunable laser could be extended to longer operating wavelengths (i.e. 2125 nm).

The output spectra at different operating wavelengths for a pump power of 1.41 W, measured at the 90 % port of C2 are displayed in Fig. 4a. As shown in this figure, the usable bandwidth of the tunable ring laser is 100 nm, spanning from 2000 to 2100 nm.

Regarding the OSNR measurements, in Fig. 4b we have plotted the OSNR based on two different ratios: (1) In blue, the $OSNR_{ASE}$, is the ratio of the output power at the signal wavelength to the peak ASE, and (2) in red, the $OSNR_{signal}$, is the ratio of the output power to the ASE level at the signal wavelength. The corresponding OSNR values for the different operating wavelengths are plotted in Fig. 4b. The $OSNR_{signal}$ is greater than 59 dB over the 100 nm bandwidth, while the $OSNR_{signal}$, has a minimum value of 54 dB at 2000 nm and rises to 59 dB for longer wavelengths. One way to improve the $OSNR_{ASE}$ would be to place the tunable filter just before the fiber coupler. The drawback would be to attenuate the output power by the insertion loss of the filter.

As mentioned earlier, the ring laser's wavelength is set by adjusting the tunable filter to the desired wavelength. To verify the accuracy of the tunable filter, we conducted a reproducibility test. This test involved switching on the tunable filter from a cold start, setting the wavelength to 2050 nm, and then activating the pump laser. Subsequently, the resulting spectrum was measured using an OSA with a resolution of 0.05 nm. This process was repeated 30 times, and the results are presented in Fig. 5. As shown in the figure, the measured peak wavelength had an approximate standard deviation of 0.25 nm. As a comparison, the wavelength stability at the specified resolution is typically ± 0.01 nm.

The HTRL's linewidth was measured to be 530 MHz with no

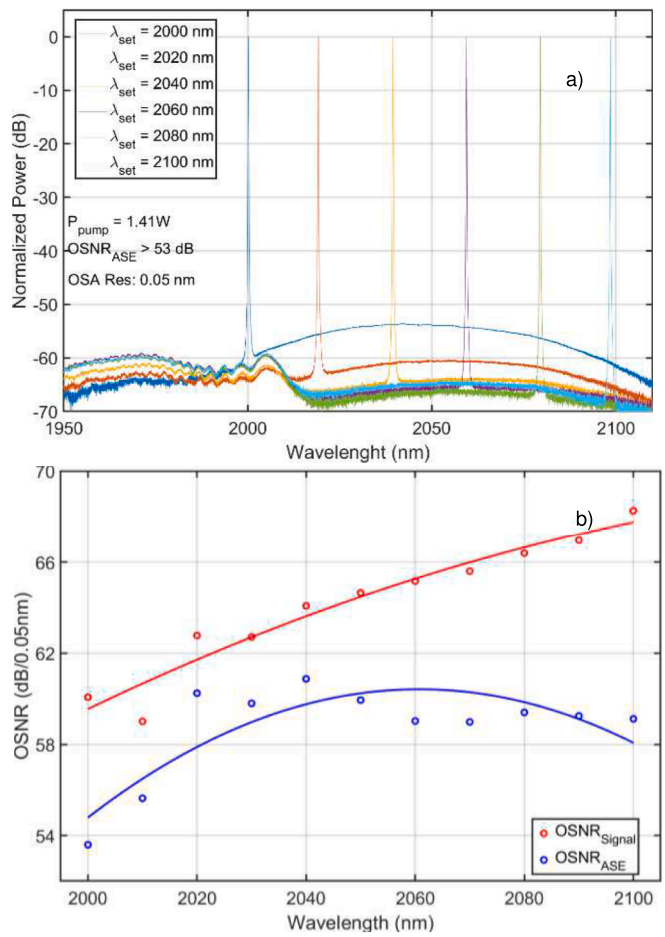

Fig. 4. A) tunable ring laser spectra for different operating wavelengths. b) OSNRsignal (red circles) and $OSNR_{ASE}$ (blue cirlces). Lines are fits to the data.

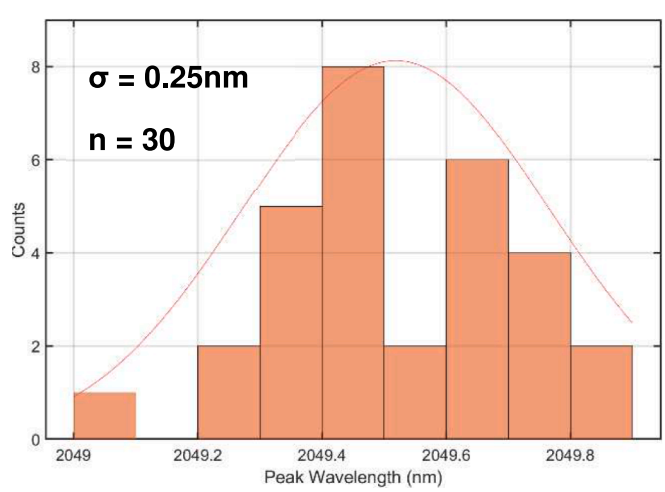

Fig. 5. Histogram showing the measured wavelength after setting the center wavelength at 2050 nm from a cold start.

variation in the operating wavelength. This value corresponds to the specified filters' bandwidth, thus, we expect it to be independent from the output power. The measurement of FSR and spectral width are shown in Fig. 6a and 6b.

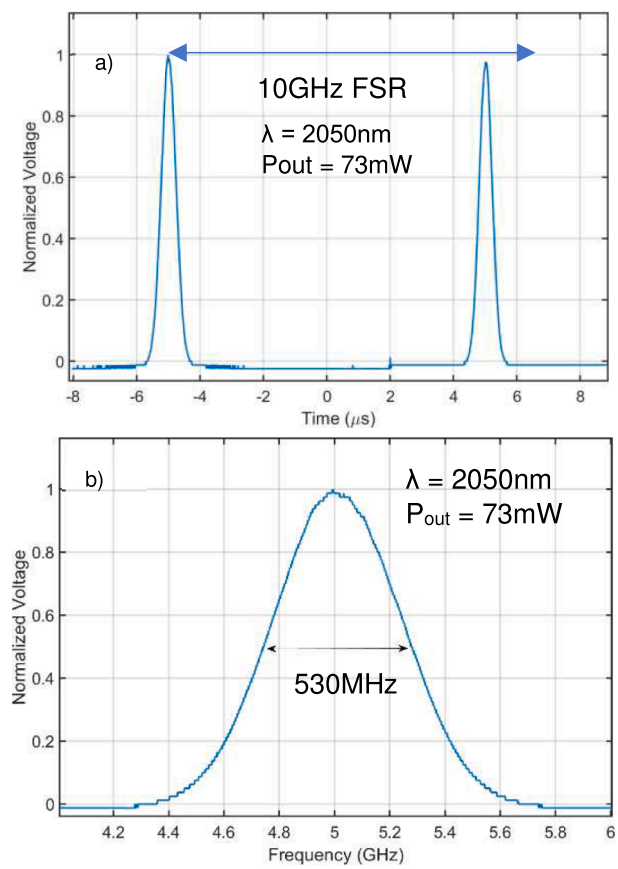

Fig. 6. A) Fabry- Perot spectrum of the ring laser showing the 10 GHz free spectral range. b) Linewidth of the ring laser measured from one of the peaks.

4. Signal amplified by a PM HDFA

In this section, we describe the performance of the HTRL output amplified by the HDFA as illustrated in Fig. 1. Fig. 7 shows the output power as a function of the launched 1860 nm pump power into the booster amplifier for several operating wavelengths. As shown in the figure: 1) since the threshold for lasing in the ring laser varies depending on the tunable filter's set wavelength, the signal begins to appear at different pump powers, 2000 nm being the highest (i.e. 2.5 W), and 2) the output signal power exhibits a linear dependence on the pump power

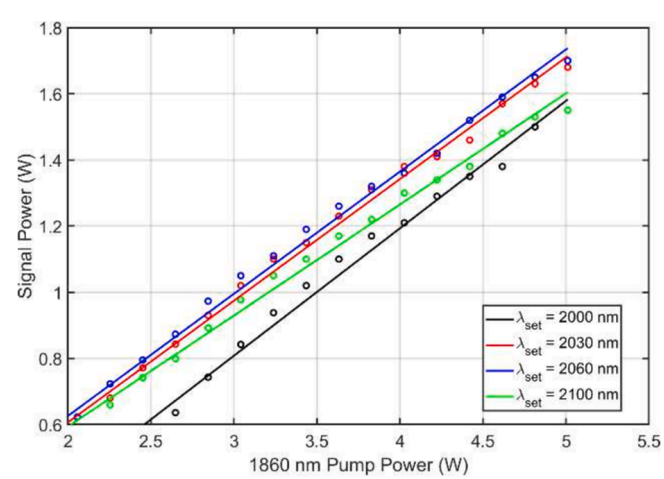

Fig. 7. Output power as a function of the pump power for different set wavelengths.

for all the tested wavelengths, with slope efficiencies ranging from 32 % to 37 %.

The evolution of the output power as a function of the operating wavelength is shown in Fig. 8. In this figure, we compare the total power (ASE + Signal) measured with a power meter (red circles), to the power measured at the signal with an optical spectral analyzer (OSA, Signal), with a 0.05 nm resolution. From these two curves, we can derive the fraction of the total power concentrated in the signal. In other words, the contribution of the signal power to the total power, including the ASE. Thus, the signal contains 96 % of the total power at 2000 nm and 99 % at 2050 nm. Furthermore, in Fig. 8, the output power peaks at 2050 nm with 32.3dBm (corresponding to 1.7 W), which was limited by the available 1860 nm pump power of 5.0 W (6.5 W before the 70/30 splitter). A comparison of Fig. 8 with Fig. 3b reveals that the peak power for the non-amplified ring peaks at 2080 nm instead of 2050 nm for the amplified signal. This wavelength shift is attributed to the WDM transmission bandwidth which was designed to have an operation bandwidth centered at 2050 nm.

The spectra measured on the amplified ring configuration for several operating wavelengths are shown in Fig. 9. As shown in the figure, the ASE contribution remains 40 dB below the peak power for any wavelength, across the tunable range. These results reflect the fact that most of the power is within the signal band of the amplified ring output.

Again, in Fig. 10 we contrast both the $OSNR_{signal}$ and $OSNR_{ASE}$ measurements. The $OSNR_{signal}$ value remains approximately constant at 54 dB/0.05 nm over the 100-nm transmission bandwidth, while the $OSNR_{ASE}$ value evolves from 42 dB/0.05 nm to plateau around 53 dB/0.05 nm. These OSNR values indicate a very good contrast ratio between signal power and ASE power.

Fig. 11 shows the polarization extinction ratio (PER) of the HDFA output. The plot in the inset shows the output power transmitted through a rotating linear polarizer, namely the visibility curve. The visibility curve is defined as $T_{dB}(\theta) = -10*\log_{10}(P(\theta)/P_{max})$, where θ denotes the angle of rotation of the linear polarizer. The instantaneous PER = $\max[PER_{dB}(\theta)]$ is measured to be better than 27.3 dB. The PER stability, shown in the main plot, is measured by rotating the polarizer to one of the PER maxima and monitoring the power changes at this fixed angle θ. The PER remained above 19.6 dB after more than 1.5 h.

Fig. 12 illustrates the long-term power stability measured for 2 h with 5 W of pump power and a set wavelength of 2050 nm. After 20 min of warmup time, the output power was stabilized with a peak-to-peak variation of 1.2 % with a root-mean-square (RMS) variation of 0.23 %.

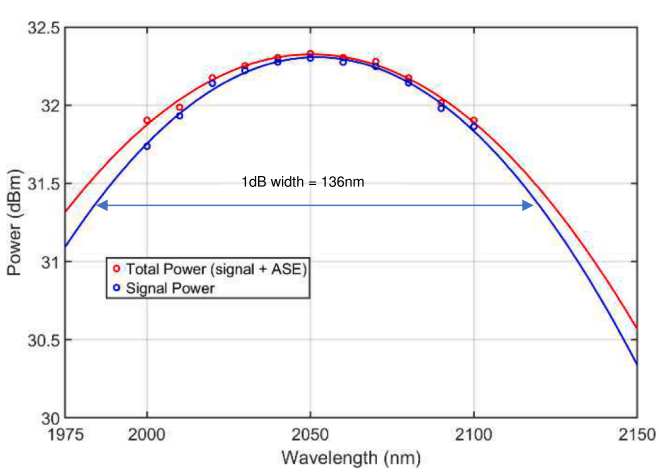

Fig. 8. Output power of the HDFA as a function of the tunable laser set wavelength. Circles represent the experimental data and lines represent the best fit and extrapolation.

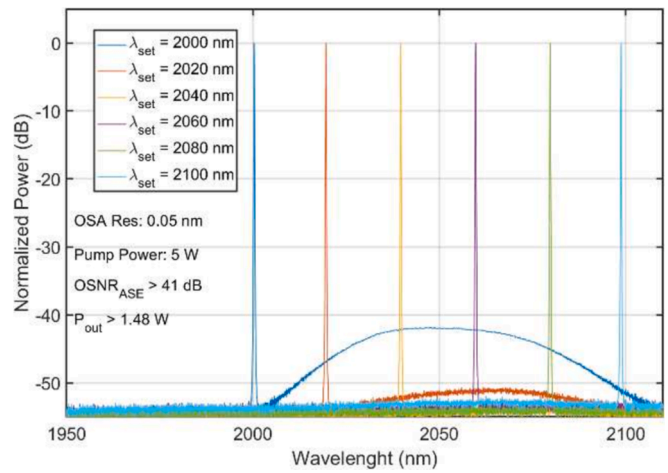

Fig. 9. Spectra of the HDFA for different set wavelengths.

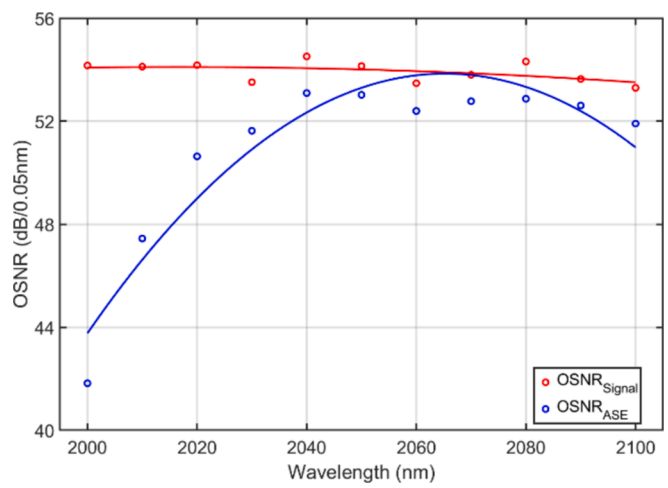

Fig. 10. OSNR at signal wavelength (red) and versus the ASE peak (blue).

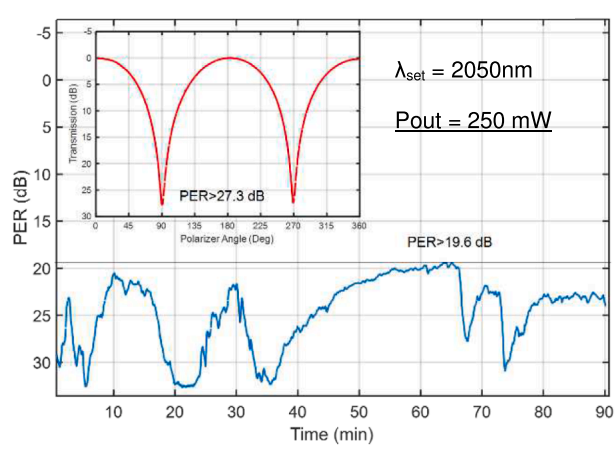

Fig. 11. Temporal stability of the PER of the HDFA over a 90-minute period. The inset shows the Transmission as a function of the polarizer angle.

5. Conclusion

In summary, we have reported the performance of a PM tunable holmium-doped fiber laser based on a tunable ring laser operating in the 2000–2100 nm band. We have presented the performance of the ring

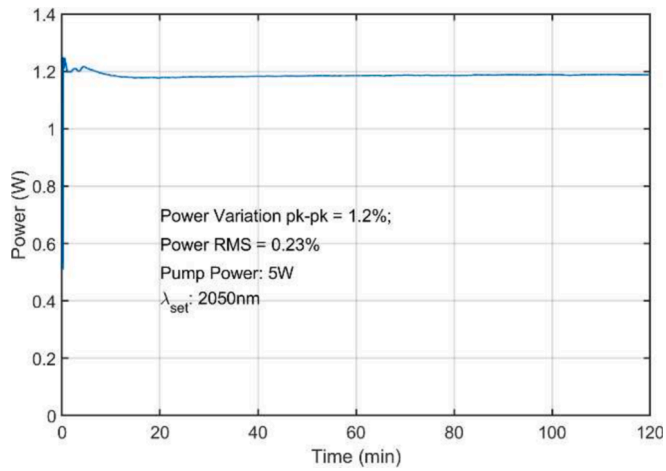

Fig. 12. Long term power stability of the HDFA.

laser alone as well as amplified by a single-stage HDFA. Both the ring laser and the HDFA were pumped using an 1860 nm fiber laser. The ring laser delivers, on average, 122mW of output power for 1.41 W of pump power with an OSNR greater than 54 dB/0.05 nm and a linewidth of 530 MHz. The signal amplified by the HDFA shows an average output power of 1.6 W for a pump power of 5.0 W (6.5 W before the 30/70 splitter) over the wavelength range from 2000 to 2100 nm. The OSNR measured after the amplifier was greater than 42 dB/0.05 nm with a PER better than 19.6 dB and power stability better than 1.2 % over 2 h. The output power was limited by the available pump, and higher output powers can be achieved with a higher pump power. The tunable laser described in this report can be utilized to test the wavelength dependence of 2 μm passive components as well as a seeder for higher power amplifiers. All these results have been tested using our integrated compact OEM module (200 x 150 x 43 mm^3).

CRediT authorship contribution statement

Juan A. Zepeda-Galvez: Writing – original draft, Validation, Methodology, Investigation, Formal analysis, Data curation. **Wiktor Walasik:** Writing – review & editing, Supervision, Project administration, Investigation, Conceptualization. **Robert E. Tench:** Writing – review & editing, Supervision, Project administration, Conceptualization. **Alexandre Amavigan:** Writing – review & editing, Validation, Supervision, Project administration, Conceptualization. **Jean-Marc Delavaux:** Writing – review & editing, Supervision, Resources, Project administration, Funding acquisition, Conceptualization.

Declaration of competing interest

The authors declare that they have no known competing financial interests or personal relationships that could have appeared to influence the work reported in this paper.

Data availability

Data will be made available on request.

References

[1] F. Gibert, P.H. Flamant, D. Bruneau, C. Loth, Two-micrometer heterodyne differential absorption lidar measurements of the atmospheric CO2 mixing ratio in the boundary layer, *Appl. Opt.* 45 (18) (2006) 4448–4458.
[2] G.D. Spiers, et al., Atmospheric CO2 measurements with a 2 μm airborne laser absorption spectrometer employing coherent detection, *Appl. Opt.* 50 (14) (2011) 2098–2111.
[3] J.L. Gouet, F. Gustave, P. Bourdon, T. Robin, A. Laurent, B. Cadier, Realization and simulation of high-power holmium doped fiber lasers for long-range transmission, *Opt. Express* 28 (15) (2020) 22307–22320.
[4] M.S. Kopyeva, S.A. Filatova, V.A. Kamynin, A.I. Trikshev, E.I. Kozlikina, V. V. Astashov, V.B. Loschenov, V.B. Tsvetkov, Ex Vivo Exposure to Soft Biological Tissues by the 2-μm All-Fiber Ultrafast Holmium Laser System, *Appl. Sci.* 12 (3825) (2022) 1–12.
[5] N.S. Nishioka, Y. Domankevitz, Comparison of tissue ablation with pulsed holmium and thulium lasers, *IEEE J. Quantum Electron* 26 (12) (1990) 2271–2275.
[6] S. Ishii, et al., Coherent 2 μm differential absorption and wind lidar with conductively cooled laser and two-axis scanning device, *Appl. Opt.* 49 (10) (2010) 1809–1817.
[7] P. Baer, P. Cebeci, M. Reiter, F. Bontke, M. Giesberts, H.-D. Hoffmann, Ultra-Low-Noise, Single-Frequency, All-PM Thulium- and Holmium-Doped Fiber Amplifiers at 1950 nm and 2090 nm for Third-Generation Gravitational Wave Detectors, *IEEE Photonics J.* 16 (1) (Feb. 2024) 1–9.
[8] A. V. Kir'yanov; Y. O. Barmenkov; I. L. Villegas-Garcia; J. L. Cruz; M. V. Andre, "Highly Efficient Holmium-Doped All-Fiber ~2.07-μm Laser Pumped by Ytterbium-Doped Fiber Laser at ~1.13 μm," *IEEE Journal of Selected Topics in Quantum Electronics,* vol. 24, no. 5, 2018.
[9] B. Beaumont, P. Bourdon, A. Barnini, L. Kervella, T. Robin, J.L. Gouët, High efficiency holmium-doped triple-clad fiber laser at 2120 nm, *J. Lightwave Technol.* 40 (19) (2022) 6480–6485.
[10] C. Yang, B. Yao, Y. Chen, G. Liu, S. Mi, K. Yang, T. Dai, X. Duan, 570 MHz harmonic mode-locking in an all polarization-maintaining Ho-doped fiber laser, *Opt. Express* 28 (22) (2020) 33028–33034.
[11] G. Xue, B. Zhang, K. Yin, W. Yang, J. Hou, Ultra-wideband all-fiber tunable Tm/Ho-co doped laser at 2 μm, *Opt. Express* 22 (21) (2014) 25976–25983.
[12] J. Aubrecht, P. Peterka, P. Honzatko, Y. Baravets, M. Jelinek, V. Kubecek, M. Pawliszewska, J. Sotor, G. Sobon, K.M. Abramski, I. Kasik, Characterization of holmium fibers with various concentrations for fiber laser applications around 2.1 um, in SPIE Photonics Europe, Brussels, Belgium, 2016.
[13] R.E. Tench, C. Romano, J.-M. Delavaux, R. Lenox, D. Byrne, K. Carney, In-Depth Studies of the Spectral Bandwidth of a 25 W 2 μm Band PM Hybrid Ho- and Tm-Doped Fiber Amplifier, *J. Lightwave Technol.* 38 (8) (2020) 2456–2463.
[14] F. Liu, P. Liu, X. Feng, C. Wang, Z. Yan, Z. Zhang, Tandem-pumped, tunable thulium-doped fiber laser in 2.1 μm wavelength region, *Opt. Express* 27 (6) (2019) 8283–8290.
[15] J. Cook, P. Roumayah, D.J. Shin, J. Thompson, A. Sincore, N. Vail, N. Bodnar, M. Richardson, Narrow linewidth 80 W tunable thulium-doped fiber laser, *Opt. Laser Technol.* 146 (2022) 107568.
[16] K. Yin, R. Zhu, B. Zhang, G. Liu, P. Zhou, J. Hou, 300 W-level, wavelength-widely-tunable, all-fiber integrated thulium-doped fiber laser, *Opt. Express* 24 (10) (2016) 11085–11090.
[17] K. Yin, B. Zhang, G. Xue, L. Li, J. Hou, High-power all-fiber wavelength-tunable thulium doped fiber laser at 2 μm, *Opt. Express* 22 (17) (2014) 19947–19952.
[18] A.A. Wolf, M.I. Skvortsov, V.A. Kamynin, I.V. Zhluktova, S.R. Abdullina, A. V. Dostovalov, V.B. Tsvetkov, S.A. Babin, **All-fiber holmium distributed feedback laser at 2.07 μm**, ***Opt. Lett.*** 44 (15) (2019) 3781–3784.
[19] S.A. Filatova, V.A. Kamynin, V.B. Tsvetkov, O.I. Medvedkov, A.S. Kurkov, **Gain spectrum of the Ho-doped fiber amplifier**, ***Laser Phys. Lett.*** 12 (9) (2015) 095105.
[20] C. Ren, Y. Shen, Y. Zheng, Y. Mao, F. Wang, D. Shen, H. Zhu, Widely-tunable all-fiber Tm doped MOPA with > 1 kW of output power, *Opt. Express* 31 (14) (2023) 22733–22739.
[21] L.G. Holmen, P.C. Shardlow, P. Barua, J.K. Sahu, N. Simakov, A. Hemming, W. A. Clarkson, Tunable holmium-doped fiber laser with multiwatt operation from 2025 nm to 2200 nm, *Opt. Lett.* 44 (17) (2019) 4131–4134.