www.sciencemag.org/content/353/6298/464/suppl/DC1

# Supplementary Materials for

## Orbital angular momentum microlaser

Pei Miao, Zhifeng Zhang, Jingbo Sun, Wiktor Walasik, Stefano Longhi,
Natalia M. Litchinitser,* Liang Feng*

*Corresponding author. Email: fengl@buffalo.edu (L.F.); natashal@buffalo.edu (N.M.L.)

Published 29July 2016 on *Science* First Release
DOI: 10.1126/science.aaf8533

**This PDF file includes:**

Supplementary Text
Figs. S1 to S5
References

**Supplementary Text**

1. Whispering gallery modes (WGMs) in a microring resonator

In a typical ring cavity, the clockwise mode and counterclockwise mode usually coexist in pairs but possess opposite wave vectors (real part), thereby travelling in opposite directions. Moreover, because of the reciprocity between these two counter-propagating modes, they share the same lasing conditions in terms of frequency, wavenumber, threshold, and intensity. In this case, these two counter-propagating modes usually oscillate together and are locked with each other because of spurious feedback in the ring, which couples them. Other dynamical regimes, such as alternating oscillation or bistability of the two counter-propagating modes, may be also observed as a result of nonlinear mode dynamics (*31*,*32*). The two counter-propagating modes interfere with each other, forming interference patterns in the ring resonator (Fig. S1A). For bidirectional oscillation, the orbital angular momentum (OAM) information carried by clockwise and counterclockwise WGMs cancels with each other. This can be visualized by the phase distribution associated with the interference pattern (Fig. S1B), where the phase is quantized at either 0 or π along the azimuthal direction corresponding to intensity maxima and minima of the interference pattern, respectively.

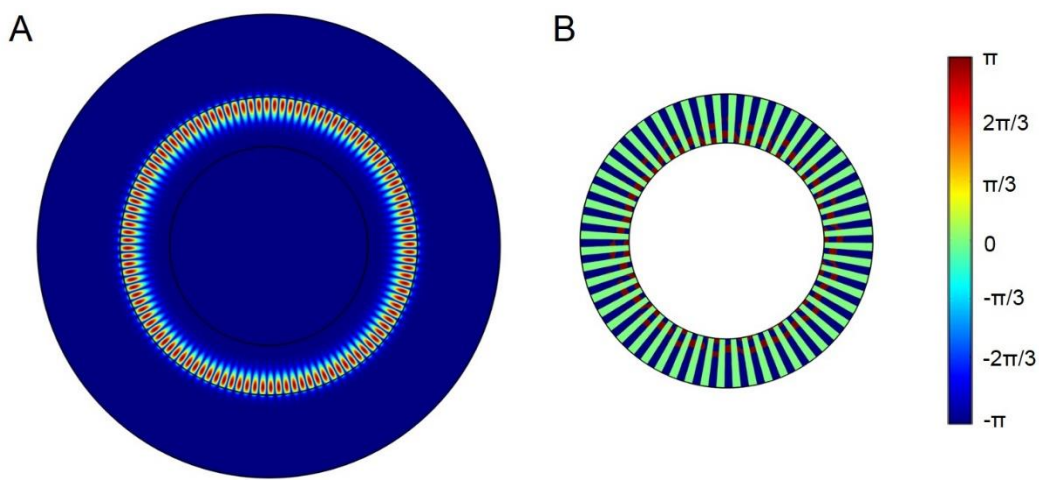


**Figure S1.** Simulation results of the intensity and phase distributions of WGM at the azimuthal order of $N = 56$ in a microring cavity. (**A**) The coexistence of the clockwise and counterclockwise WGMs lead to an interference pattern, averaging out the OAM. (**B**) Due to the interference, discontinuous phase distribution is observed along the azimuthal direction with phase quantized at either 0 or π, further confirming the absence of OAM.

2. Unidirectional WGM in the EP-modulated microring resonator

Because of missing the OAM information, WGMs in a typical ring cavity are not capable to produce OAM lasing. It is therefore important to develop a strategy of robust selection of either clockwise or counterclockwise WGM, enabling the unidirectional power flow circulating inside the cavity.

By solving the coupled mode equations resulting from the complex index and gain/loss modulations introduced in Eq. (1), we can derive the complex wavenumber of the WGMs:

$$\beta = \beta_0 \pm \kappa\sqrt{n'^2 - n''^2},$$

where $\beta_0$ is the intrinsic wave number of the WGM without modulations, $n'$ is the amplitude of the real part index modulation, $n''$ refers to the gain/loss modulation, and $\kappa$ denotes the coupling between the clockwise and counterclockwise modes. If $n' = n''$, as in our design, the coupling between the two modes disappear. An exceptional point (EP) consequently occurs: two counter-propagating WGMs coalesce and become accidentally degenerate. As a result, one of them oscillates, but the other one is suppressed, leading to the unidirectional power flow circulating inside the cavity *(33)*. A detailed analysis of unidirectional laser emission, that accounts for linear and nonlinear mode coupling above threshold is given in the next section. In our design, the counterclockwise WGM circulates inside the cavity (Fig. S2A) and carries OAM with a continuous phase variation (Fig. S2B).

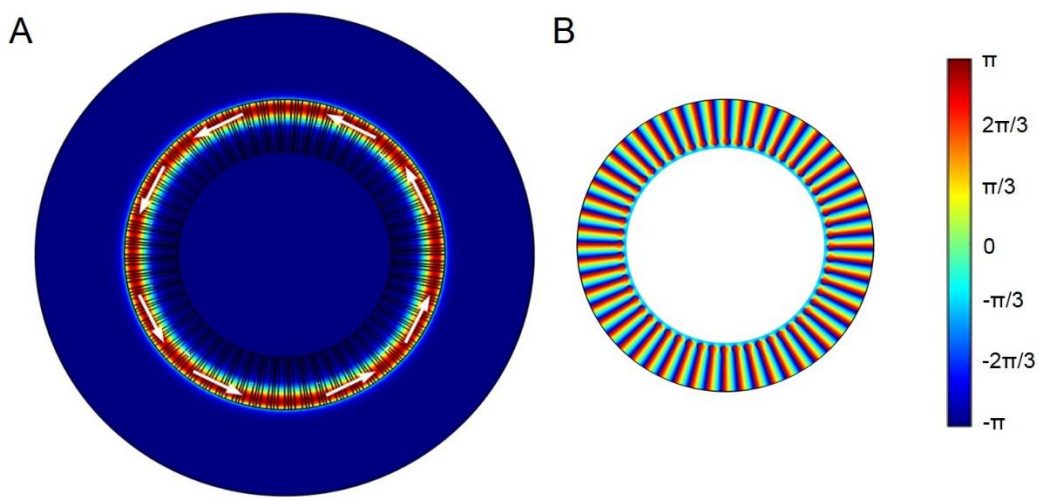


**Figure S2.** Simulation results of the intensity and phase distributions of WGM at the azimuthal order of N=56 in a microring cavity with combined index and loss/gain modulations at the EP. (**A**) Only the counterclockwise WGM circulates inside the cavity, such that no interference is observed and the intensity distribution is thus azimuthally uniform. (**B**) Continuous phase variation is also observed along the azimuthal direction, indicating that the WGM carries an effective OAM capable of producing the OAM lasing.

It is worth noting that the center of mass of the WGM shifts outwards because of the finite curvature of the ring (centrifugal force). Therefore, the WGM is more sensitive to the modulations and scatters introduced along the perimeter of the ring. This is the reason why we introduce the scatters along the outer perimeter for an efficient extraction of the OAM lasing.

3. Theoretical analysis of unidirectional laser oscillation at the EP

Unidirectional laser oscillation at the EP modulation of index and loss/gain gratings ( $n' = n''$ ) is demonstrated by a detailed semiconductor rate equation analysis that

describes linear and nonlinear competition of clockwise and counterclockwise WGMs in the microring. Failure of the EP modulation, i.e. for $n' \neq n''$, generally results in bidirectional, alternating or bistable WGM oscillation, which is detrimental for OAM laser emission.

The semiconductor rate equations for the two counter propagating WGMs read *(31,32,34)*

$$\frac{dE_1}{dt} = \kappa(1+i\alpha)[N(1-s|E_1|^2-c|E_2|^2)-1]E_1 - \kappa_1 E_2$$
$$\frac{dE_2}{dt} = \kappa(1+i\alpha)[N(1-c|E_1|^2-s|E_2|^2)-1]E_2 - \kappa_2 E_1$$
$$\frac{dN}{dt} = \gamma[\mu - N - N(1-s|E_1|^2-c|E_2|^2)|E_1|^2 - N(1-c|E_1|^2-s|E_2|^2)|E_2|^2]$$

In the above equations, $E_1(t)$ and $E_2(t)$ are the slowly-varying normalized amplitudes of counterclockwise and clockwise propagating WGMs, $N$ is the carrier density, $\kappa$ is the field decay rate, $\gamma$ is the decay rate of the carrier population, $\alpha$ is the linewidth enhancement factor, and $\mu$ is the normalized injection current ($\mu \approx 0$ at transparency, $\mu \approx 1$ at lasing threshold). The two counter propagating modes interact both in a linear and nonlinear fashion.

Linear mode coupling arises from the combined index and loss/gain gratings and is described by the parameters $\kappa_1$ and $\kappa_2$ in the rate equations. In the absence of the gratings ($n' = n'' = 0$), $\kappa_{1,2}$ do not completely vanish owing to spurious backscattering in the microring. In this case they typically take a small and equal value, $\kappa_1 = \kappa_2 = \kappa_d + i\kappa_c$, where $\kappa_c$ and $\kappa_d$ are the conservative and dissipative couplings, respectively *(31,32)*. When the index and loss/gain gratings are inscribed in the microring, linear mode coupling is dominated by the relative strengths $n'$ and $n''$ of the two gratings. In particular, when the two grating strengths are equal $n' = n''$, linear coupling is unidirectional, i.e. $\kappa_2/\kappa_1 \approx 0$, whereas unbalanced gratings ($n' \neq n''$) results in a non-negligible value of $\kappa_2/\kappa_1$. The unidirectional mode coupling case, $\kappa_2/\kappa_1 \approx 0$, corresponds to the EP operation of the microring laser, since near laser threshold the linearized laser equations are described by a defective non-Hermitian matrix with coalescing eigenvalues and eigenvectors *(33)*.

Nonlinear coupling of WGMs arises from gain saturation. The modes saturate both their own and each others gains through spectral hole burning and carrier heating effects, which are included in the *s* and *c*>*s* saturation parameters *(31,32,34)*. As the standing-wave mode pattern has a spatial period much smaller than carrier diffusion length, grating effects of the carrier density is neglected *(32)*.

To show the robust unidirectional emission of the microring laser close to the EP operation, we numerically solved the semiconductor rate equations for different values of linear mode couplings $\kappa_{1,2}$ and computed the bifurcation diagram of the equations, i.e. extremes of the amplitudes $|E_{1,2}(t)|$ of each of the two WGMs versus normalized injection current $\mu$.

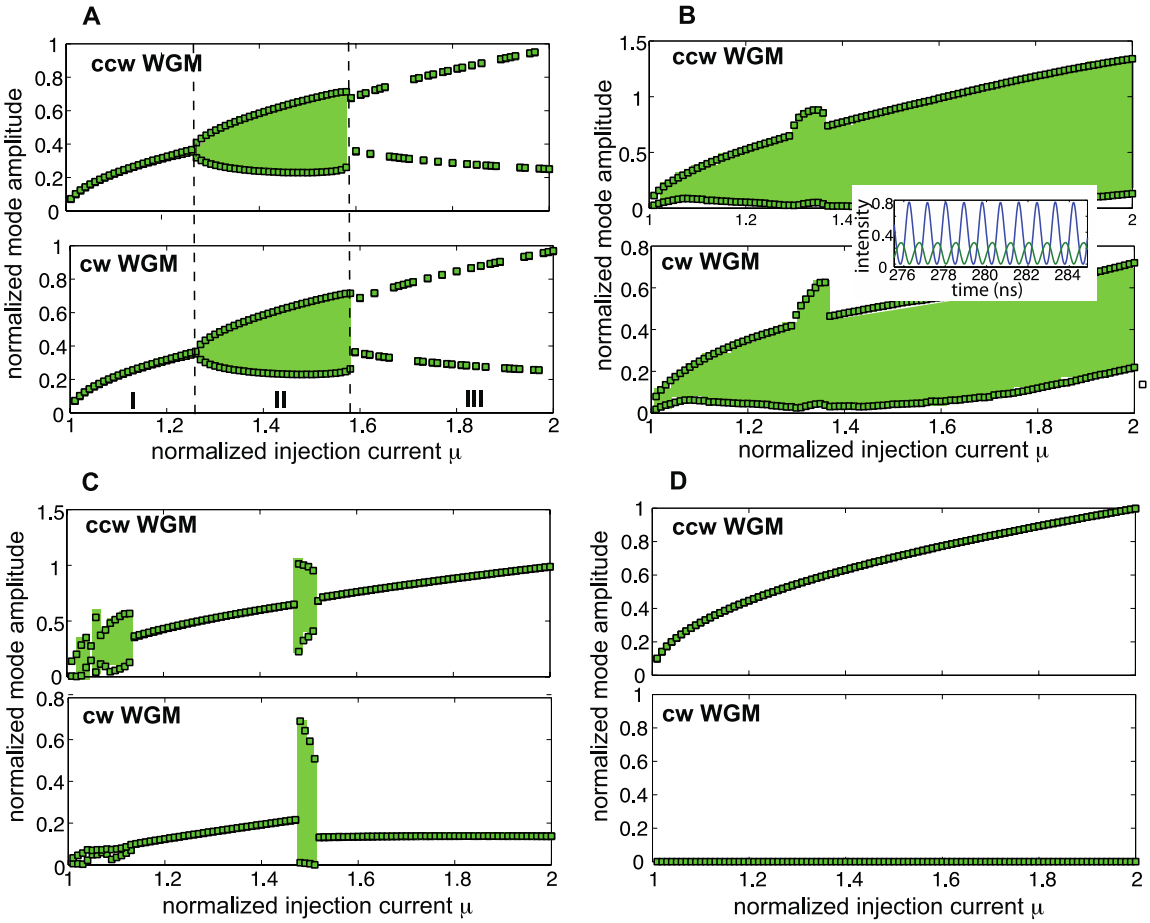


**Figure S3.** Bifurcation diagrams of the semiconductor laser rate equations, depicting the extreme of amplitudes $|E_{1,2}(t)|$ for counterclockwise (CCW) and clockwise (CW) WGMs versus normalized injection current $\mu$, for different values of linear mode couplings $\kappa_1$ and $\kappa_2$. (A) $\kappa_1 = \kappa_2 = \kappa_d + i\kappa_c$ , $\kappa_c = 0.44\ \mathrm{ns}^{-1}$ , $\kappa_d = 0.0327\ \mathrm{ns}^{-1}$, corresponding to weak backscattering and absence of index and loss/gain gratings. (B) Highly unbalanced index and loss/gain gratings ($\kappa_1 = 5i\ \mathrm{ns}^{-1}$, $\kappa_2/\kappa_1 = 0.5$). (C) Slightly unbalanced index and loss/gain gratings ($\kappa_1 = 5i\ \mathrm{ns}^{-1}$, $\kappa_2/\kappa_1 = 1/15$). (D) EP condition ($\kappa_1 = 5i\ \mathrm{ns}^{-1}$, $\kappa_2/\kappa_1 = 0$). The shaded areas in the figures correspond to an oscillatory dynamics. The inset in (B) shows the detailed oscillatory dynamics of the ccw and cw WGM intensities at the normalized injection current μ = 1.5.

Parameter values used in the simulations are $\kappa = 100\ \mathrm{ns}^{-1}$, $\gamma = 0.2\ \mathrm{ns}^{-1}$, $\alpha = 3.5$, $s = 0.005$ and $c = 2s$. Figure S3A shows a typical bifurcation diagram corresponding to the absence of the two gratings ( $n' = n'' = 0$); non-vanishing (although small) values of the couplings $\kappa_1 = \kappa_2 = \kappa_d + i\kappa_c$ are considered to account for spurious backscattering in the microring. According to previous works *(31,32)*, three different dynamical regimes are found: symmetric continuous-wave (CW) bidirectional emission near laser threshold (region I in Fig. S3A), alternating mode oscillations (region II in Fig. S3A), and unidirectional bistable CW emission (region III in Fig.S3A). Figures S3B, S3C and S3D show typical bifurcation diagrams as obtained when the linear mode coupling is stronger and dominated by the two gratings. In Fig. S3B we considered highly unbalanced index and loss gratings. In this case there is a typical oscillatory dynamics with no CW behavior

at any injection current $\mu$. The two clockwise and counterclockwise WGMs are both oscillating in time, with the counterclockwise WGM dominating over the clockwise WGM. An example of the oscillatory dynamics for a given injection current ($\mu = 1.5$) is shown in the inset of Fig. S3B. As the EP condition $n' = n''$ is approached, i.e. $\kappa_2 / \kappa_1 \to 0$, one observes regimes of alternating oscillations and CW asymmetric mode coexistence, with the counterclockwise WGM dominating over the other mode. The region of alternating oscillations shrinks (Fig. S3C). At the EP condition $\kappa_2 / \kappa_1 = 0$, the clockwise WGM is fully suppressed and the laser operates unidirectionally in a stable CW regime, as shown in Fig. S3D. The laser rate equation analysis clearly indicates that operation of the microring at the EP is essential to achieve robust and stable unidirectional laser oscillation.

4. Fabrication and characterization of OAM microring laser

The OAM microring laser was fabricated using overlay electron beam lithography processes with accurate alignments. First, periodically arranged structures for the imaginary part of index modulation were patterned in polymethyl methacrylate (PMMA) by electron beam lithography, followed by electron beam evaporation of Ge/Cr and lift-off in acetone. Next, the structures corresponding to the real part of index modulation were patterned, followed by deposition and lift-off of Ge. Then the microring resonator with sidewall modulations was defined with aligned electron beam lithography using hydrogen silsesquioxane (HSQ), followed by dry etching with mixed gases of $Cl_2$ and $BCl_3$ to accomplish the OAM lasing cavity in InGaAsP/InP.

Figure S4 shows the measurement setup we used to obtain the spectral characteristics of our laser and to confirm the vortex nature of the emitted radiation. In our experiment, the fabricated OAM laser was pumped by a nanosecond pulsed laser of a 50 kHz repetition rate and an 8 ns pulse duration at the wavelength of 1064 nm impinging onto the sample from the backside (through the InP substrate). The pump power was controlled with a variable neutral density (ND) filter, monitored by a power meter. The pump beam was selectively reflected by a long-pass dichroic mirror (1180 nm cutoff wavelength) and focused onto the microring cavity using a Mitutoyo 20X near infrared (NIR) long-working distance objective (NA= 0.4). The lasing emission from the backside was collected by the same microscope objective and then guided into the monochromator for the spectral analysis in the range from 1400 to 1600 nm.

Simultaneously, the emission from the front side was utilized for self-interference to characterize the OAM nature of the lasing emission. The lasing radiation from the front side was collected and collimated using another Nikon 20X objective (NA= 0.45). A modified Mach-Zehnder interferometer was built to observe its self-interference. The forward emitted beam was split into two beams, and then recombined using an off-center, quasi-parallel beam alignment to form an interference pattern recorded by a CCD camera. Because of the nanosecond pulsed optical pumping, the lasing is expected to be a pulse with its duration lasting also in the nanosecond regime. In order to ensure the time overlap between the two beams, the optical path in one arm of the interferometer was adjusted using a delay line.

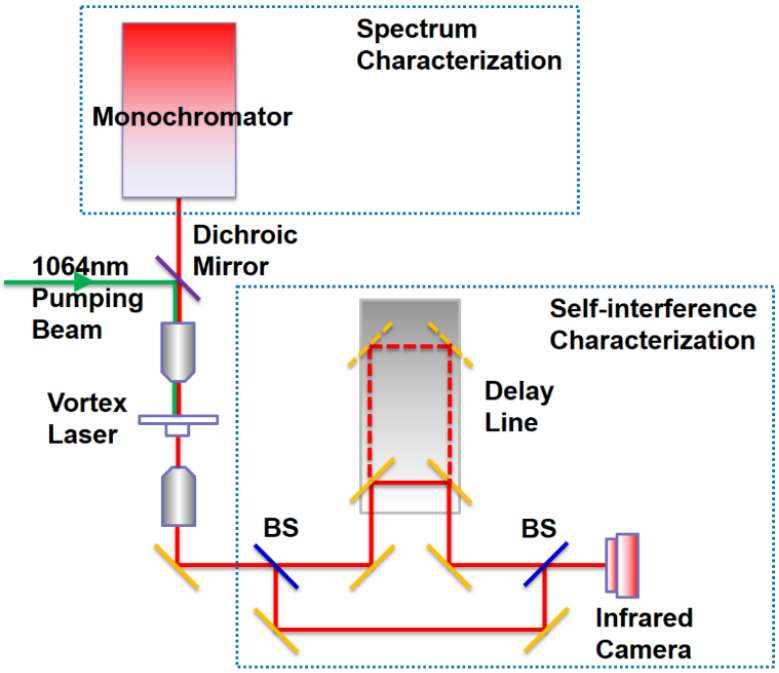


**Figure S4.** Measurement setup to characterize the OAM lasing.

While OAM lasing has been confirmed in our experiments, it is interesting to further explore if there is any OAM associated with the spontaneous emission, which may lead to OAM light emitting diodes (LED). If the laser is far below threshold, the ring cavity and the designed complex-index grating on top operate like a filter for the fluorescence/spontaneous emission. However, it is likely that most photons will be emitted in modes that are not the WGM that the ring/grating couple. Therefore, the OAM cannot be generated. When the microring is pumped close to the lasing threshold, however, the filtering effect will get stronger and a non-negligible fraction of spontaneous emission photons is likely to be emitted in the emerging 'lasing-like' mode carrying OAM. Therefore, in the regime slightly below the lasing condition, OAM spontaneous emission might partially work. However, a sensitive CCD camera is needed to clearly observe the OAM spontaneous emission.

5. Polarization engineering of OAM lasing

Due to the rotational symmetry of the ring resonator and angular gratings on the side wall, the OAM lasing beam is expected to be a cylindrical vector beam with a rotational symmetric polarization. The polarization of the emitted lasing beam is determined by the polarization of the light inside the micro-ring cavity at the location where scatters are placed. In other words, the scattered light carries the same polarization as the polarization of the WGM observed at the sidewall scatters.

In our microring cavity, the quasi-TM mode is designed to be the lasing mode. The field distributions of both radial and azimuthal polarization components in the cross-section of the OAM microring laser can be seen in Fig. S5. While the azimuthal polarization component of the WGM is mainly localized at the upper and lower boundaries of the InGaAsP layer, the radial polarization component transversely extends outside the ring

perimeter. As a result, only the radial polarization component can "see" the introduced sidewall scatters. Therefore, the laser radiation resulting from the scattering of the preferred quasi-TM mode in our cavity will have a radial polarization.

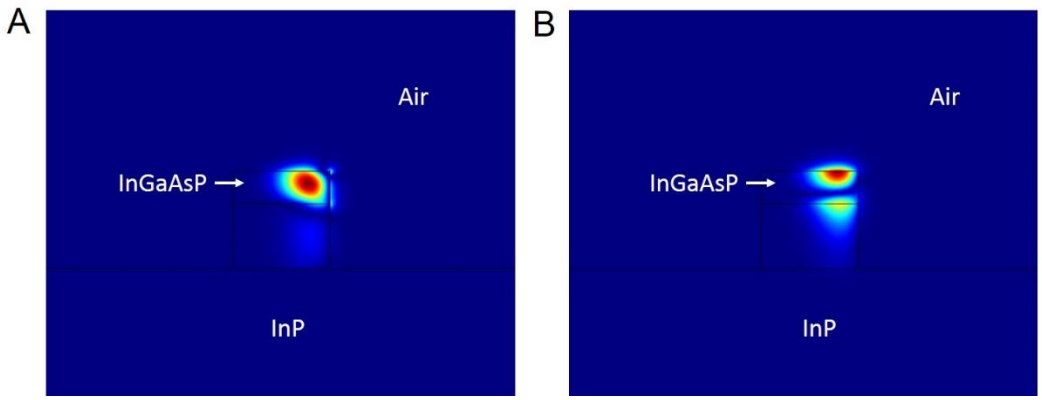


**Figure S5.** The cross-section view of the radial polarized component $|E_r|$ (**A**) and the azimuthal polarized component $|E_{az}|$ (**B**) for the desired quasi-TM mode in the ring resonator.

**References and Notes**


1. A. M. Yao, M. J. Padgett, Orbital angular momentum: Origins, behavior and applications. *Adv. Opt. Photonics* **3**, 161 (2011). doi:10.1364/AOP.3.000161

2. L. Allen, M. W. Beijersbergen, R. J. C. Spreeuw, J. P. Woerdman, Orbital angular momentum of light and the transformation of Laguerre-Gaussian laser modes. *Phys. Rev. A* **45**, 8185–8189 (1992).doi:10.1103/PhysRevA.45.8185 Medline

3. S. Franke-Arnold, G. Gibson, R. W. Boyd, M. J. Padgett, Rotary photon drag enhanced by a slow-light medium. *Science* **333**, 65–67 (2011).doi:10.1126/science.1203984 Medline

4. S. Franke-Arnold, S. M. Barnett, E. Yao, J. Leach, J. Courtial, M. Padgett, Uncertainty principle for angular position and angular momentum. *New J. Phys.* **6**, 103 (2004). doi:10.1088/1367-2630/6/1/103

5. J. Courtial, D. Robertson, K. Dholakia, L. Allen, M. Padgett, Rotational frequency shift of a light beam. *Phys. Rev. Lett.* **81**, 4828–4830 (1998). doi:10.1103/PhysRevLett.81.4828

6. Q. Guo, W. Gao, J. Chen, Y. Liu, S. Zhang, Line degeneracy and strong spin-orbit coupling of light with bulk bianisotropic metamaterials. *Phys. Rev. Lett.* **115**, 067402 (2015).doi:10.1103/PhysRevLett.115.067402 Medline

7. C. Maurer, A. Jesacher, S. Bernet, M. Ritsch-Marte, What spatial light modulators can do for optical microscopy. *Laser Photonics Rev.* **5**, 81–101 (2011). doi:10.1002/lpor.200900047

8. N. Bozinovic, Y. Yue, Y. Ren, M. Tur, P. Kristensen, H. Huang, A. E. Willner, S. Ramachandran, Terabit-scale orbital angular momentum mode division multiplexing in fibers. *Science* **340**, 1545–1548 (2013).doi:10.1126/science.1237861 Medline

9. Z. Bomzon, G. Biener, V. Kleiner, E. Hasman, Space-variant Pancharatnam-Berry phase optical elements with computer-generated subwavelength gratings. *Opt. Lett.* **27**, 1141–1143 (2002).doi:10.1364/OL.27.001141 Medline

10. N. Yu, P. Genevet, M. A. Kats, F. Aieta, J.-P. Tetienne, F. Capasso, Z. Gaburro, Light propagation with phase discontinuities: Generalized laws of reflection and refraction. *Science* **334**, 333–337 (2011).doi:10.1126/science.1210713 Medline

11. D. Lin, P. Fan, E. Hasman, M. L. Brongersma, Dielectric gradient metasurface optical elements. *Science* **345**, 298–302 (2014).doi:10.1126/science.1253213 Medline

12. K. E. Chong, I. Staude, A. James, J. Dominguez, S. Liu, S. Campione, G. S. Subramania, T. S. Luk, M. Decker, D. N. Neshev, I. Brener, Y. S. Kivshar, Polarization-independent silicon metadevices for efficient optical wavefront control. *Nano Lett.* **15**, 5369–5374 (2015).doi:10.1021/acs.nanolett.5b01752 Medline

13. M. I. Shalaev, J. Sun, A. Tsukernik, A. Pandey, K. Nikolskiy, N. M. Litchinitser, High-efficiency all-dielectric metasurfaces for ultracompact beam manipulation in

transmission mode. *Nano Lett.* **15**, 6261–6266 (2015).doi:10.1021/acs.nanolett.5b02926 Medline

14. G. Knöner, S. Parkin, T. A. Nieminen, V. L. Y. Loke, N. R. Heckenberg, H. Rubinsztein-Dunlop, Integrated optomechanical microelements. *Opt. Express* **15**, 5521–5530 (2007).doi:10.1364/OE.15.005521 Medline

15. E. Karimi, B. Piccirillo, E. Nagali, L. Marrucci, E. Santamato, Efficient generation and sorting of orbital angular momentum eigenmodes of light by thermally tuned q-plates. *Appl. Phys. Lett.* **94**, 231124 (2009). doi:10.1063/1.3154549

16. X. Cai, J. Wang, M. J. Strain, B. Johnson-Morris, J. Zhu, M. Sorel, J. L. O'Brien, M. G. Thompson, S. Yu, Integrated compact optical vortex beam emitters. *Science* **338**, 363–366 (2012).doi:10.1126/science.1226528 Medline

17. R. W. Heeres, V. Zwiller, Subwavelength focusing of light with orbital angular momentum. *Nano Lett.* **14**, 4598–4601 (2014).doi:10.1021/nl501647t Medline

18. M. A. Noginov, G. Zhu, A. M. Belgrave, R. Bakker, V. M. Shalaev, E. E. Narimanov, S. Stout, E. Herz, T. Suteewong, U. Wiesner, Demonstration of a spaser-based nanolaser. *Nature* **460**, 1110–1112 (2009).doi:10.1038/nature08318 Medline

19. D. Naidoo, F. S. Roux, A. Dudley, I. Litvin, B. Piccirillo, L. Marrucci, A. Forbes, Controlled generation of higher-order Poincaré sphere beams from a laser. *Nat. Photonics* **10**, 327–332 (2016). doi:10.1038/nphoton.2016.37

20. Materials and methods are available as supplementary materials on *Science* Online.

21. K. G. Makris, R. El-Ganainy, D. N. Christodoulides, Z. H. Musslimani, Beam dynamics in PT symmetric optical lattices. *Phys. Rev. Lett.* **100**, 103904 (2008).doi:10.1103/PhysRevLett.100.103904 Medline

22. C. E. Rüter, K. G. Makris, R. El-Ganainy, D. N. Christodoulides, M. Segev, D. Kip, Observation of parity–time symmetry in optics. *Nat. Phys.* **6**, 192–195 (2010). doi:10.1038/nphys1515

23. J. Wiersig, S. W. Kim, M. Hentschel, Asymmetric scattering and nonorthogonal mode patterns in optical microspirals. *Phys. Rev. A* **78**, 053809 (2008). doi:10.1103/PhysRevA.78.053809

24. B. Peng, Ş. K. Özdemir, F. Lei, F. Monifi, M. Gianfreda, G. L. Long, S. Fan, F. Nori, C. M. Bender, L. Yang, Parity-time-symmetric whispering-gallery microcavities. *Nat. Phys.* **10**, 394–398 (2014). doi:10.1038/nphys2927

25. H. Schomerus, Quantum noise and self-sustained radiation of PT-symmetric systems. *Phys. Rev. Lett.* **104**, 233601 (2010).doi:10.1103/PhysRevLett.104.233601 Medline

26. M. Brandstetter, M. Liertzer, C. Deutsch, P. Klang, J. Schöberl, H. E. Türeci, G. Strasser, K. Unterrainer, S. Rotter, Reversing the pump dependence of a laser at an exceptional point. *Nat. Commun.* **5**, 4034 (2014).doi:10.1038/ncomms5034 Medline

27. Z. Lin, H. Ramezani, T. Eichelkraut, T. Kottos, H. Cao, D. N. Christodoulides, Unidirectional invisibility induced by PT-symmetric periodic structures. *Phys. Rev. Lett.* **106**, 213901 (2011).doi:10.1103/PhysRevLett.106.213901 Medline

28. A. Regensburger, C. Bersch, M.-A. Miri, G. Onishchukov, D. N. Christodoulides, U. Peschel, Parity-time synthetic photonic lattices. *Nature* **488**, 167–171 (2012).doi:10.1038/nature11298 Medline

29. L. Feng, Y.-L. Xu, W. S. Fegadolli, M.-H. Lu, J. E. B. Oliveira, V. R. Almeida, Y.-F. Chen, A. Scherer, Experimental demonstration of a unidirectional reflectionless parity-time metamaterial at optical frequencies. *Nat. Mater.* **12**, 108–113 (2013).doi:10.1038/nmat3495 Medline

30. R. Dorn, S. Quabis, G. Leuchs, Sharper focus for a radially polarized light beam. *Phys. Rev. Lett.* **91**, 233901 (2003).doi:10.1103/PhysRevLett.91.233901 Medline

31. M. Sorel, P. J. R. Laybourn, A. Scirè, S. Balle, G. Giuliani, R. Miglierina, S. Donati, Alternate oscillations in semiconductor ring lasers. *Opt. Lett.* **27**, 1992–1994 (2002).doi:10.1364/OL.27.001992 Medline

32. M. Sorel, G. Giuliani, A. Scire, R. Miglierina, S. Donati, P. J. R. Laybourn, Operating regimes of GaAs-AlGaAs semiconductor ring lasers: Experiment and model. *IEEE J. Quantum Electron.* **39**, 1187–1195 (2003). doi:10.1109/JQE.2003.817585

33. S. Longhi, L. Feng, PT-symmetric microring laser-absorber. *Opt. Lett.* **39**, 5026–5029 (2014).doi:10.1364/OL.39.005026 Medline

34. G. Van der Sande, L. Gelens, P. Tassin, A. Scire, J. Danckaert, Two-dimensional phase-space analysis and bifurcation study of the dynamical behavior of a semiconductor ring laser. *J. Phys. B* **41**, 095402 (2008). doi:10.1088/0953-4075/41/9/095402