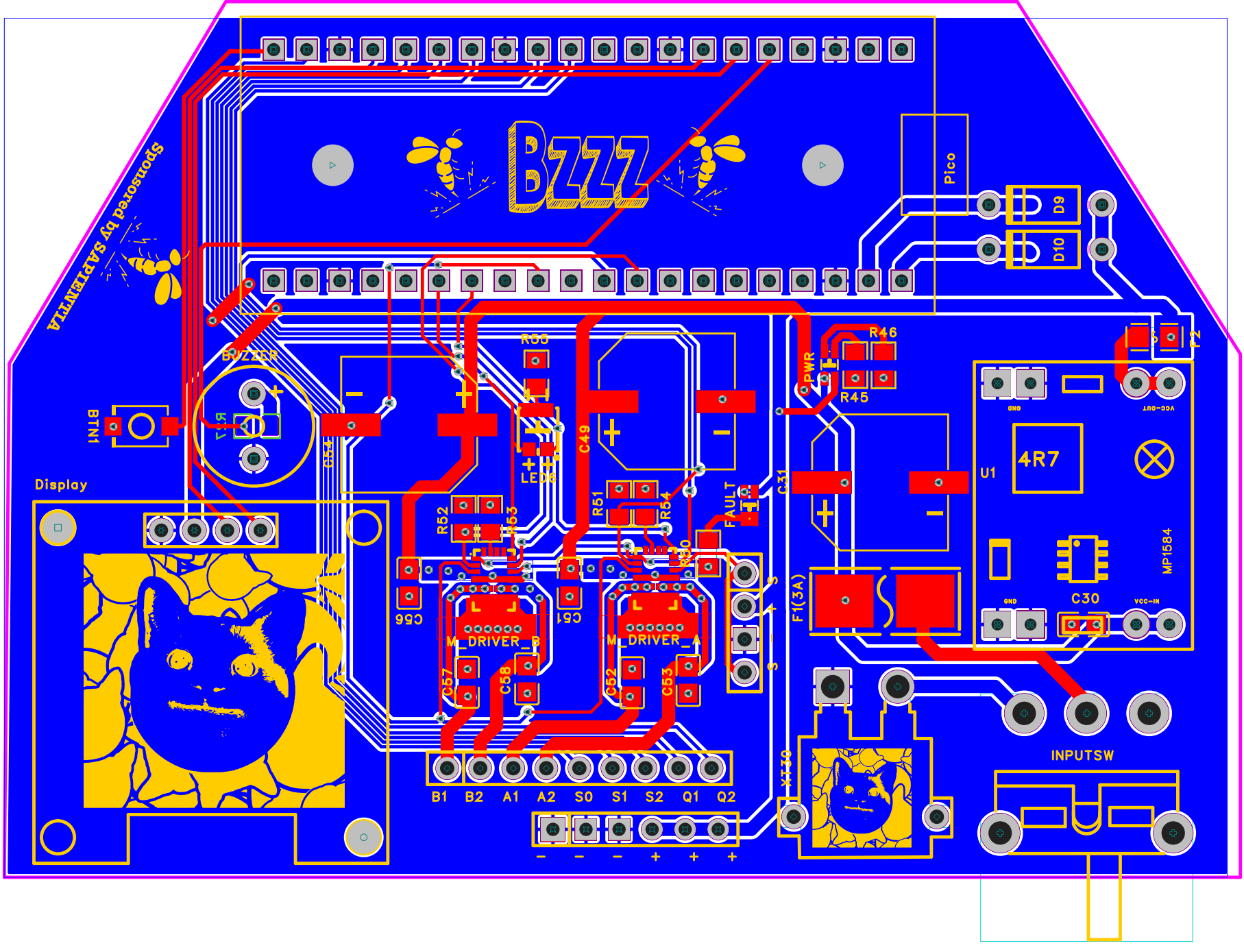
Bzzz
Sponsored by SAPIENTIA
Pico
D9
D10
BUZZER
BTN1
Display
R55
C49
LED6
R52
R53
R51
R54
R50
C66
C61
C64
M_DRIVER_B
M_DRIVER_A
C57
C58
C62
C63
FAULT
C31
PWR
R46
R45
U1
4R7
MP1584
C30
GND
VCC-OUT
VCC-IN
F1(3A)
XT30
INPUTSW
B1
B2
A1
A2
S0
S1
S2
Q1
Q2

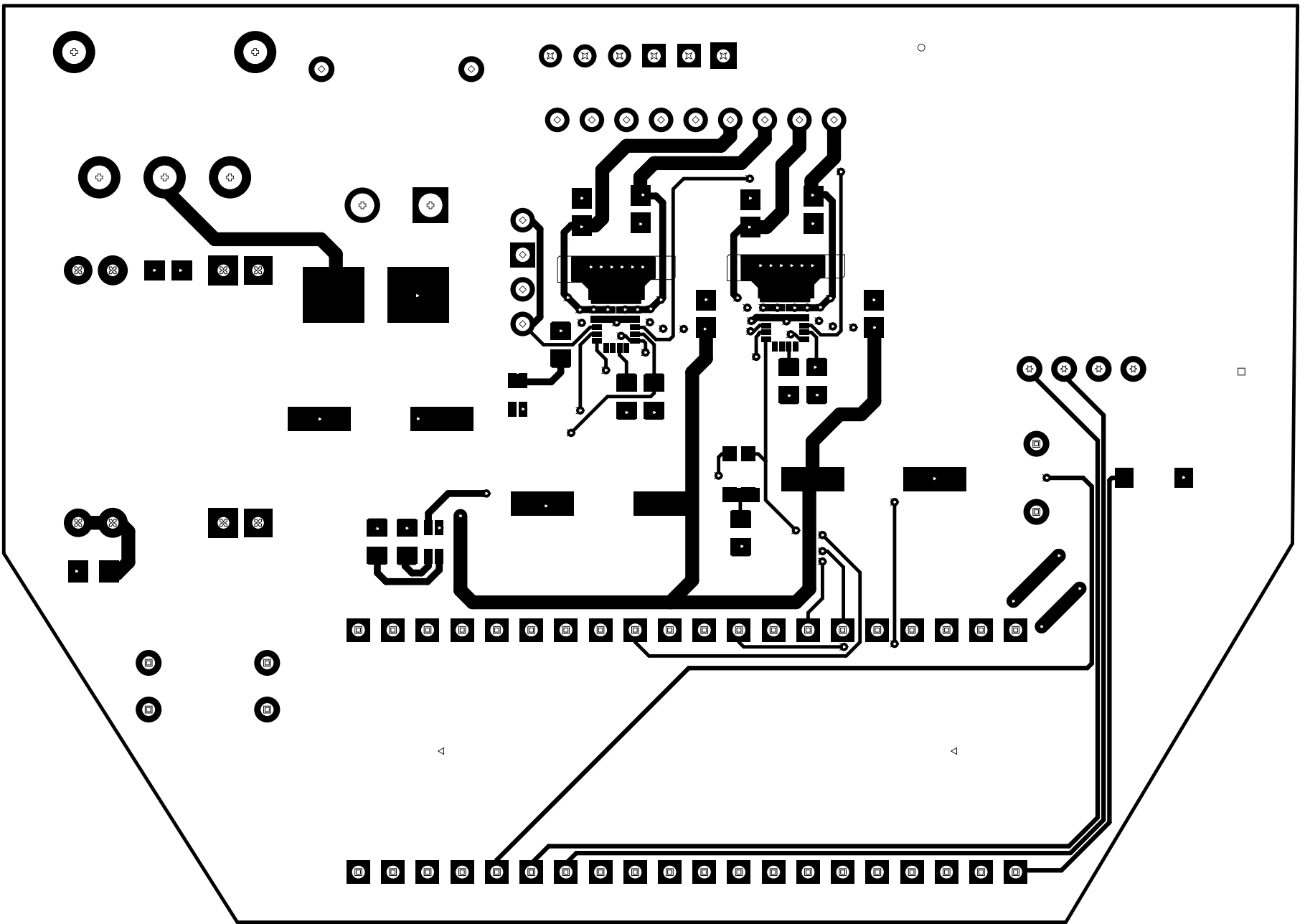

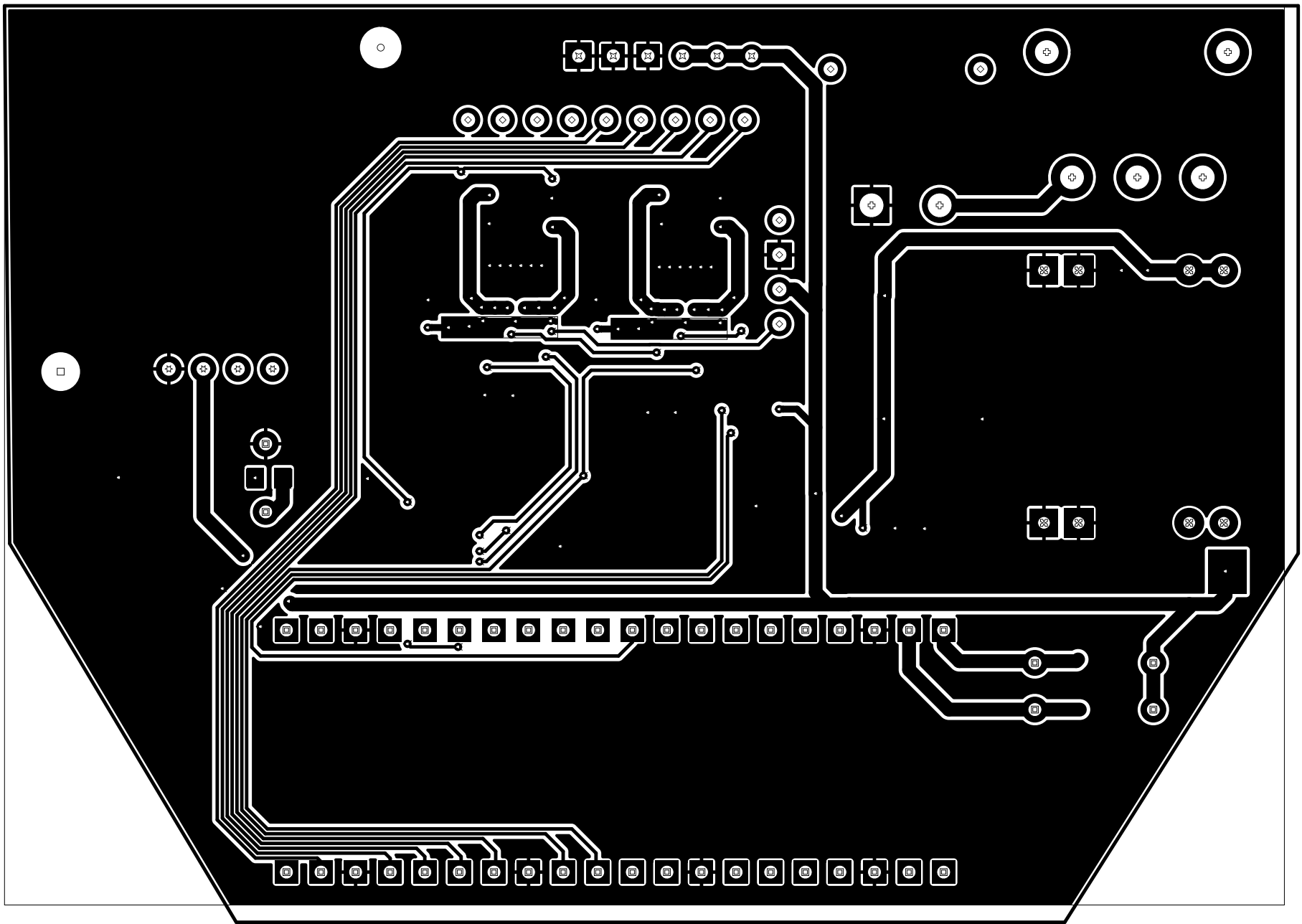

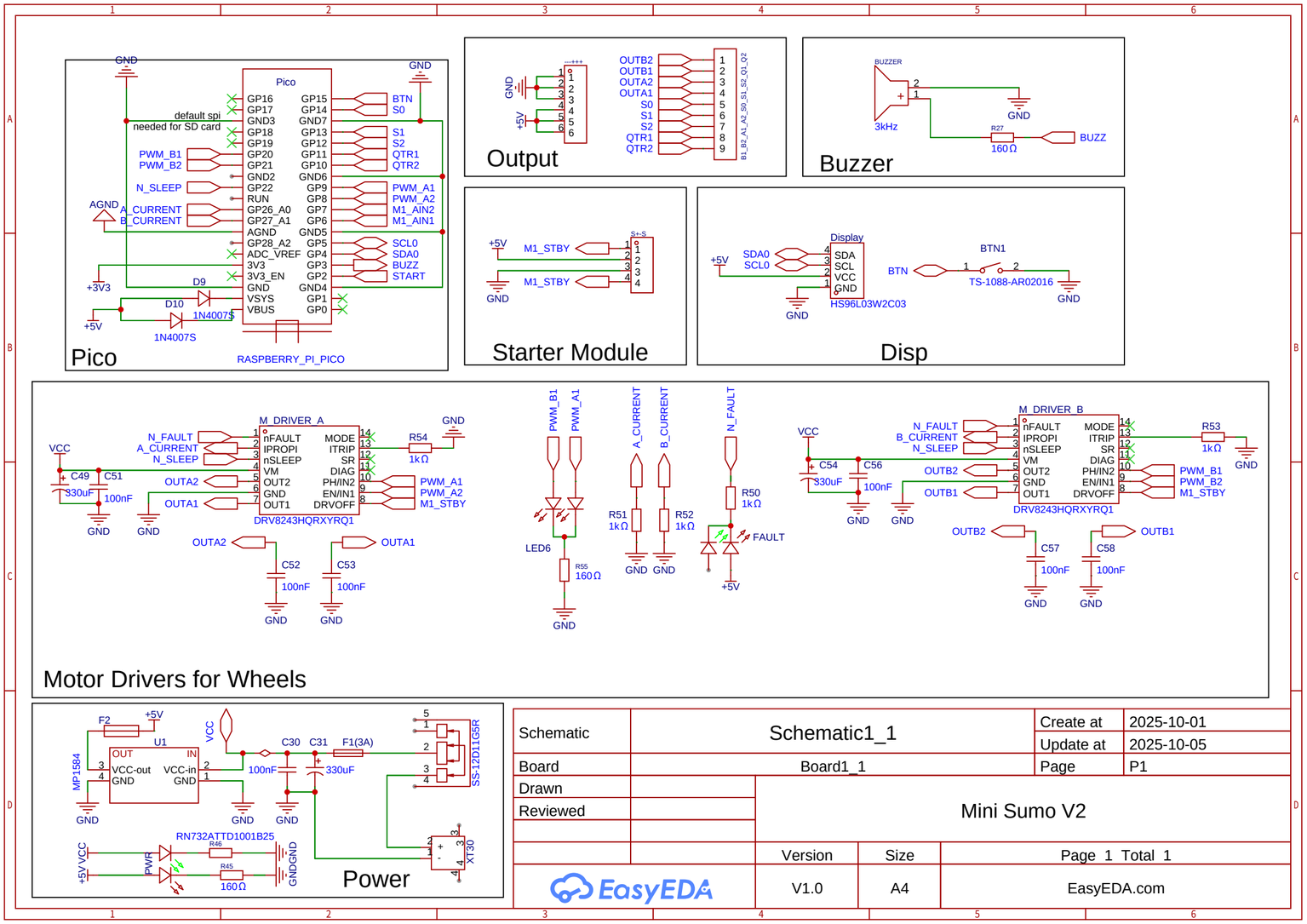
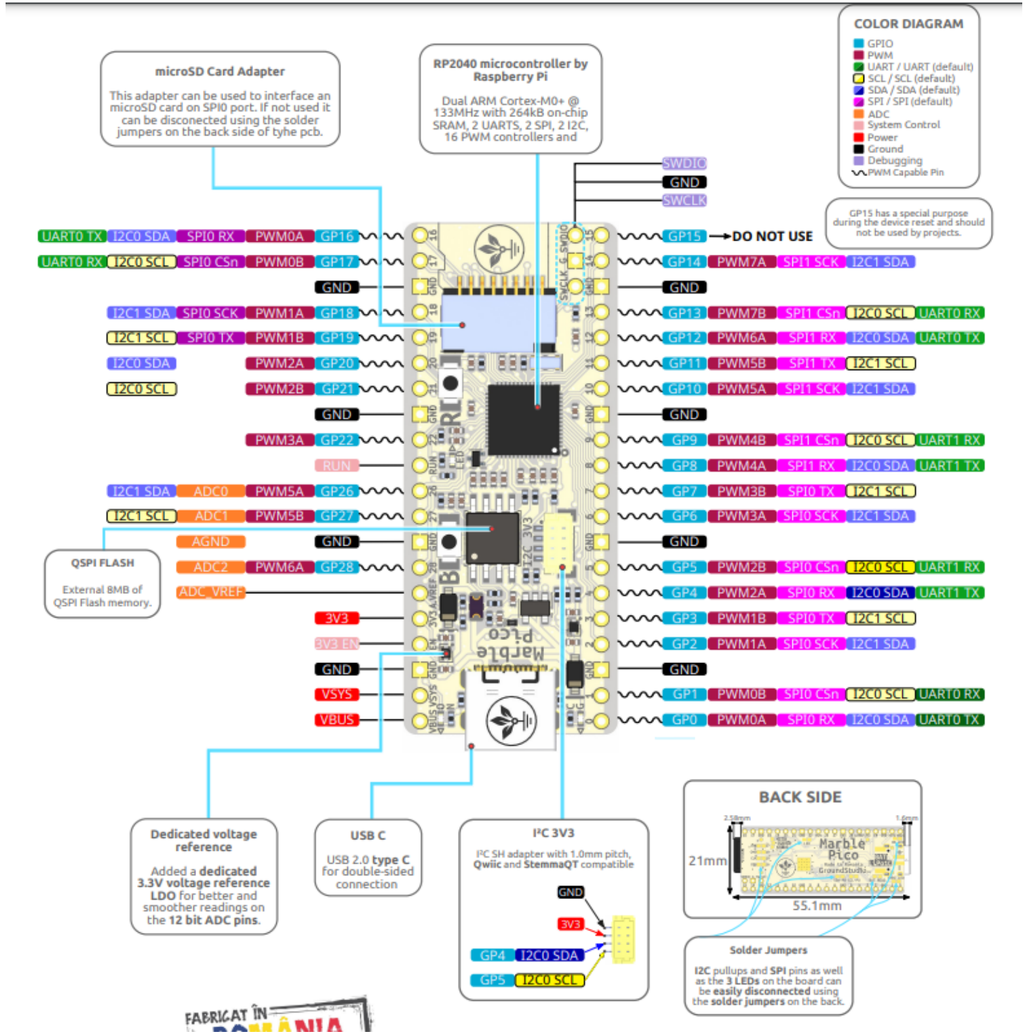
Schematic	Schematic1_1	Create at	2025-10-01
		Update at	2025-10-05
Board	Board1_1	Page	P1
Drawn	Mini Sumo V2		
Reviewed			
		Version	Size	Page 1 Total 1
EasyEDA		V1.0	A4	EasyEDA.com