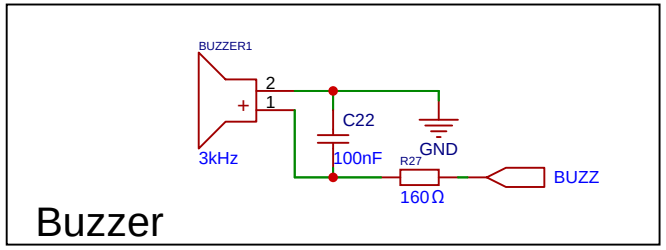

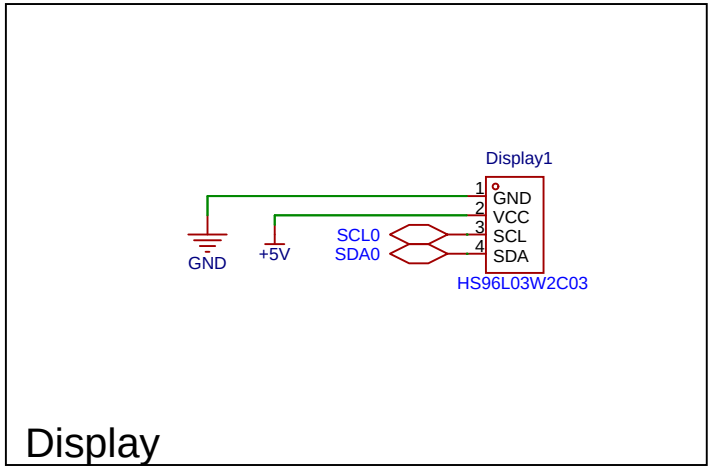

Schematic	MixedSchematic_2	Update Date	2026-03-07
		Create Date	2026-03-05
Page	Notification systems	Part Number	AIW-LB-0003
Drawn	progenor	Sumo	
Reviewed	progenor		
		VER	SIZE	PAGE 1 OF 5
EasyEDA		V0.1	A4	AllIsWell

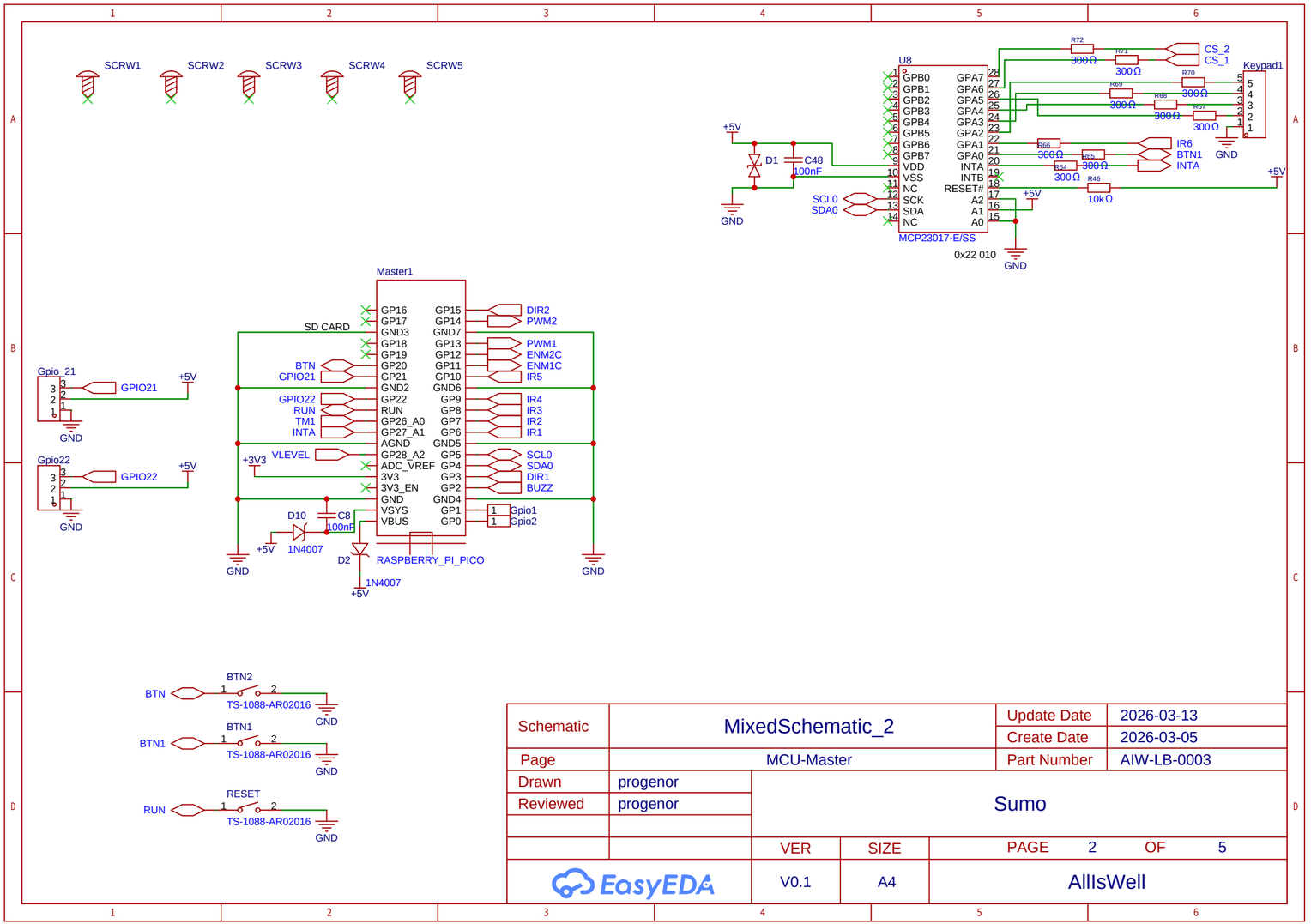

Schematic	MixedSchematic_2	Update Date	2026-03-13
		Create Date	2026-05-05
Page	MCU-Master	Part Number	AIW-LB-0003
Drawn	progenor	Sumo	
Reviewed	progenor		
		VER	SIZE	PAGE 2 OF 5
EasyEDA		V0.1	A4	AllIsWell

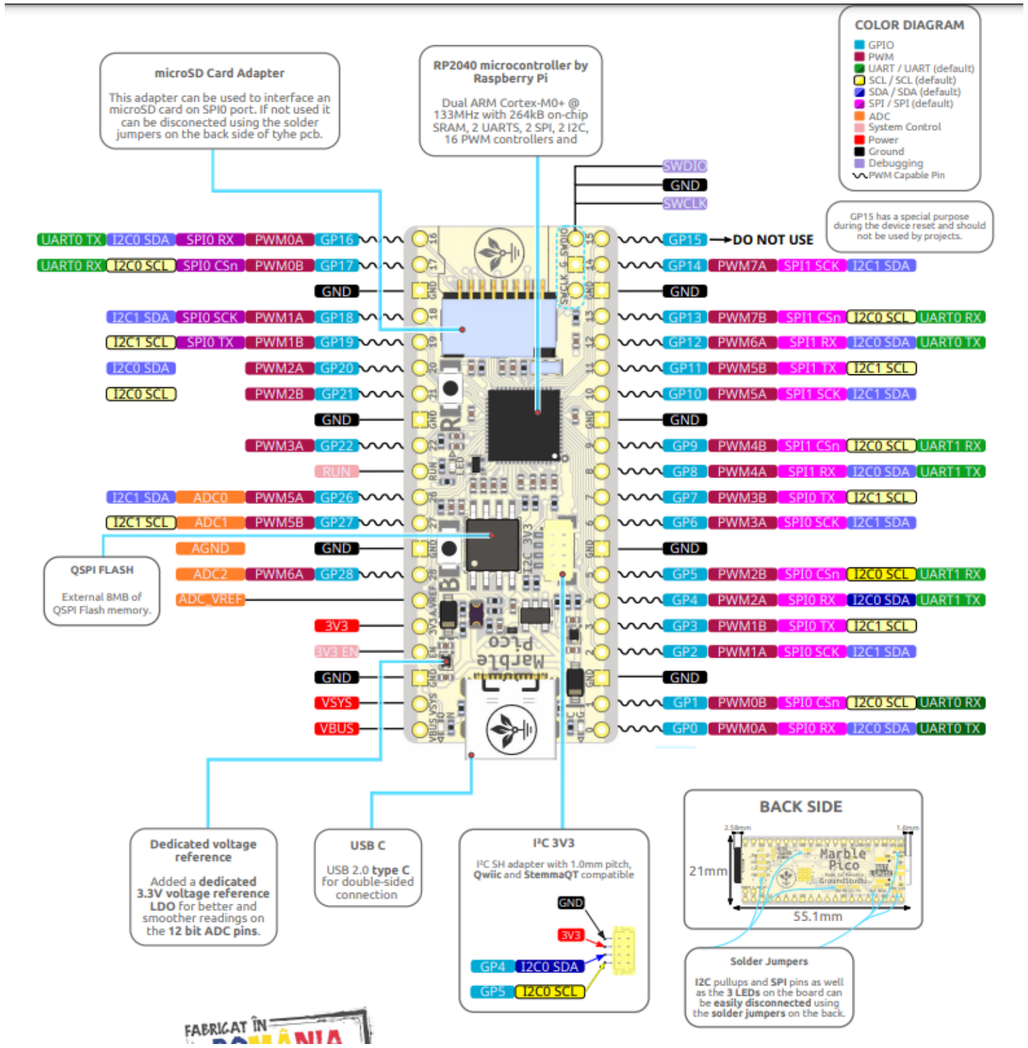

We used **Phase Locked PWM control** for ZeroLAG which gives better motor speed, better torque gradient for low speeds.
For driving motor with ZeroLAG, **you need to use one PWM signal (For both direction and speed)** and one Enable/Disable signal.
Also you need to attach both motor driver and main control circuit's grounds together. It will make 0V reference point.
At ZeroLAG there is no MCU, which means there is no LAG, delay between motor control signals and motors.
PWM Pin: Controls both speed and direction. %50 duty cyle means %0 speed. %95 Duty Cycle full speed to forward, %5 Duty Cycle Full speed to backward. For controlling driver you need to supply PWM signals between %5 to %95 duty cycle (fullness value)
Disable Pin: This stops motors, When you apply Logic 1 (5V) it will stop motors.
For stopping motors there is 2 methods
1st you can apply %50 duty cycle PWM signal, that will stop motors. And 2nd is giving logic 1 to Disable signal. **We strongly suggest you to use second disable pin option. Giving %50 signal to motor driver will result temperature increase of mosfets.**

EN	Meaning
0	Stop
1	Go

KILL	Meaning
0	Stop
1	Go

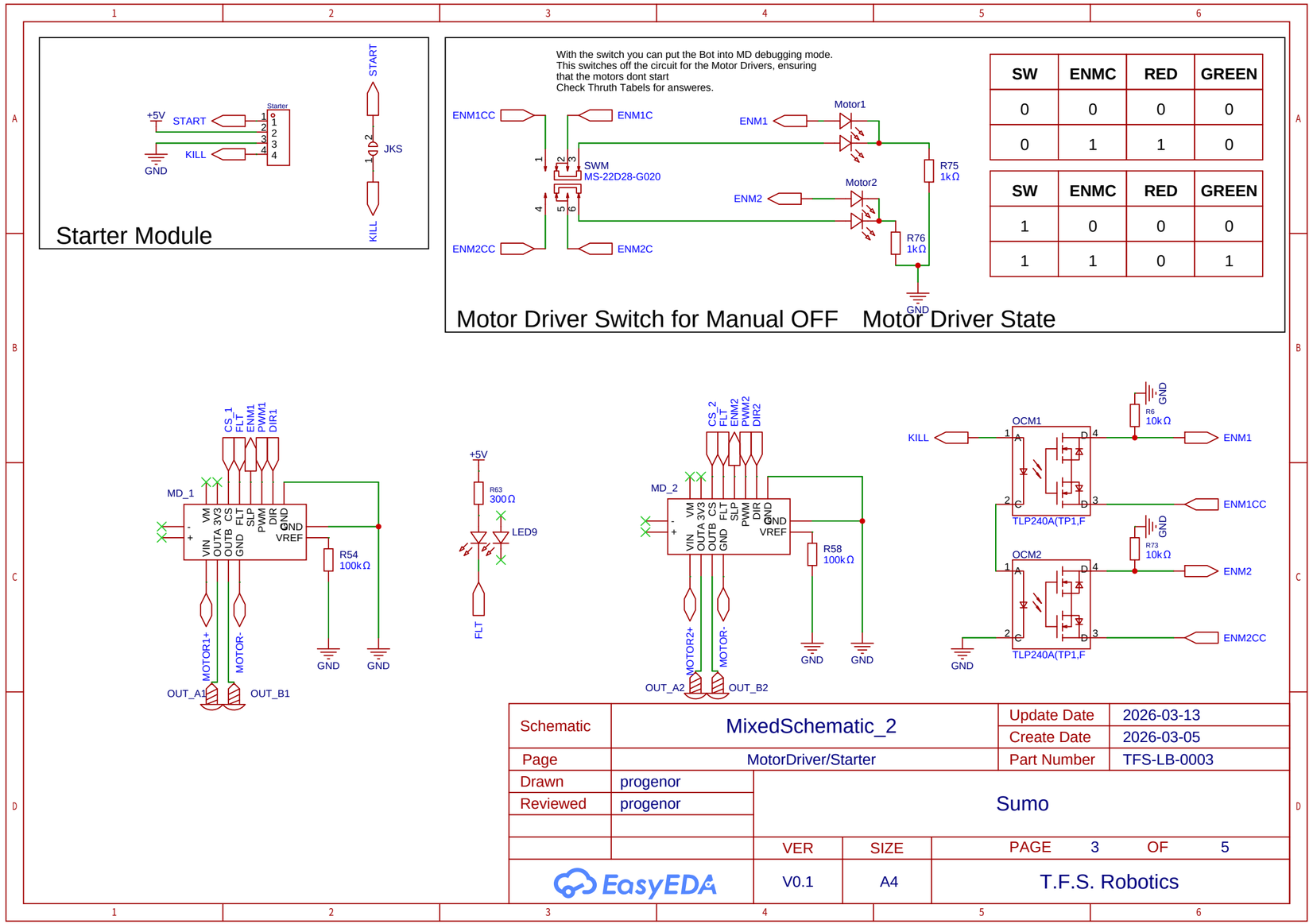

SW	ENMC	RED	GREEN
0	0	0	0
0	1	1	0

SW	ENMC	RED	GREEN
1	0	0	0
1	1	0	1

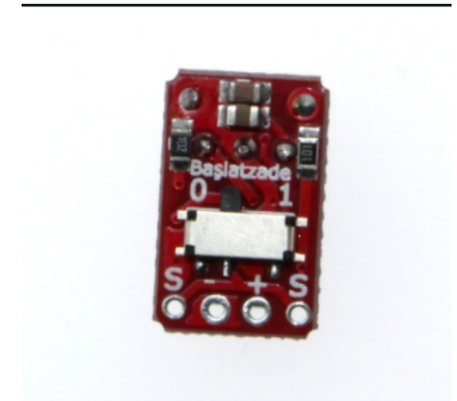

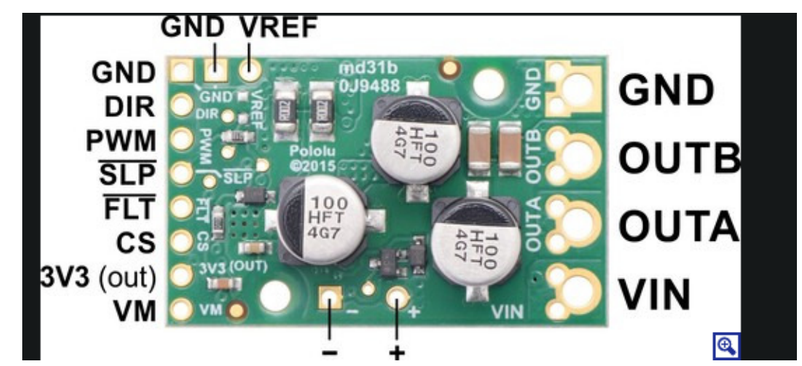

Schematic	MixedSchematic_2		Update Date	2026-03-13
			Create Date	2026-03-05
Page	MotorDriver/Starter		Part Number	TFS-LB-0003
Drawn	progenor	Sumo		
Reviewed	progenor			
		VER	SIZE	PAGE 3 OF 5
EasyEDA		V0.1	A4	T.F.S. Robotics

Power

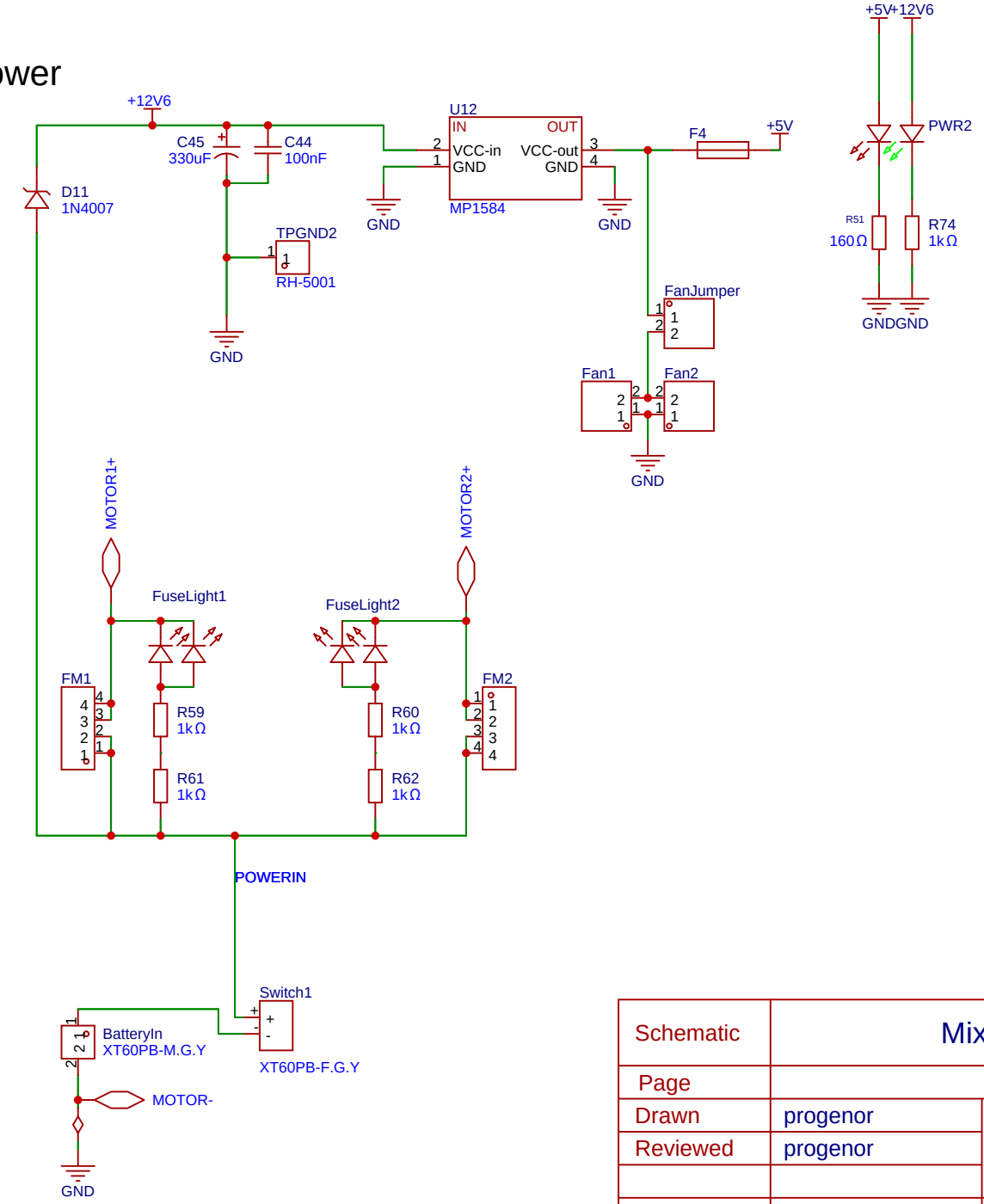

Schematic	MixedSchematic_2	Update Date	2026-03-13
		Create Date	2026-03-05
Page	Power	Part Number	AIW-LB-0003
Drawn	progenor	Sumo	
Reviewed	progenor		
		VER	SIZE	PAGE 4 OF 5
EasyEDA		V0.1	A4	AllIsWell

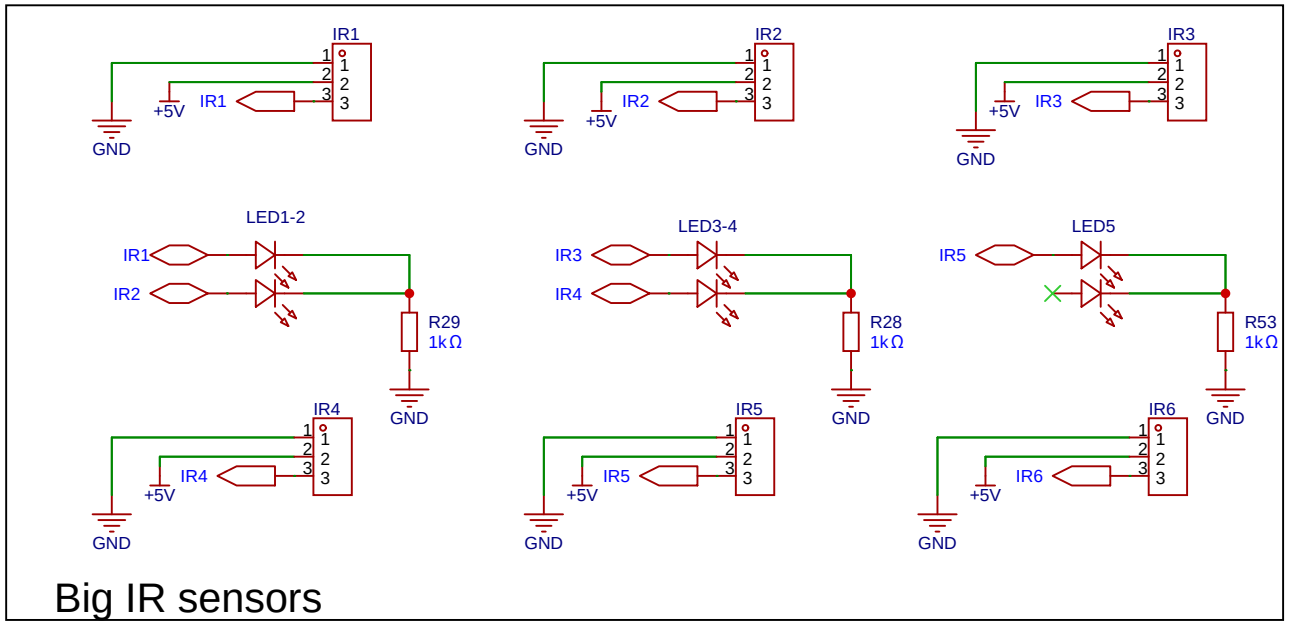

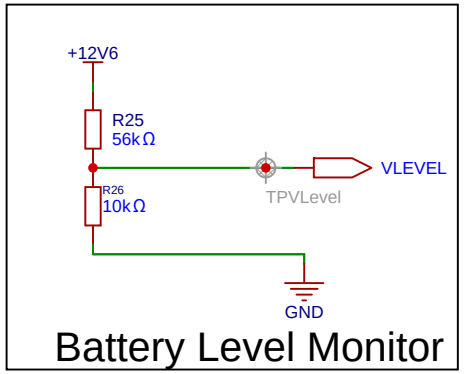

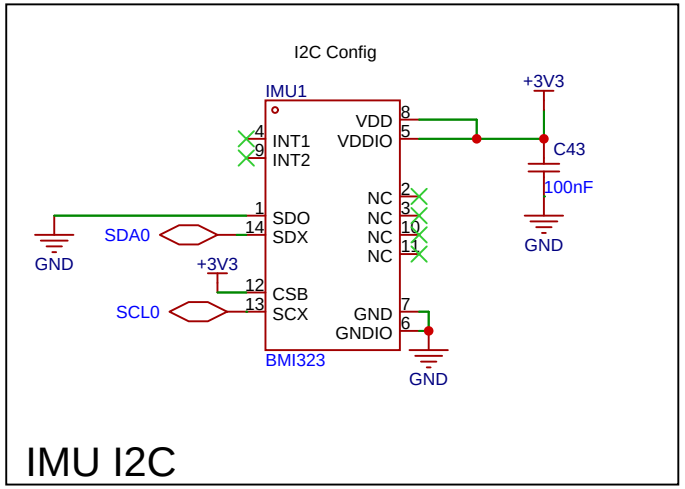

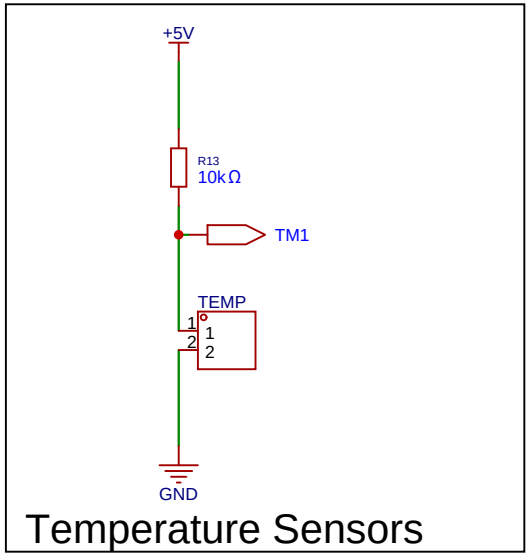

Schematic	MixedSchematic_2	Update Date	2026-03-12
		Create Date	2026-03-05
Page	Sensors	Part Number	AIW-LB-0003
Drawn	progenor	Sumo	
Reviewed	progenor		
		VER	SIZE	PAGE 5 OF 5
EasyEDA		V0.1	A4	AllIsWell