WIFI module (ESP8266-012F)

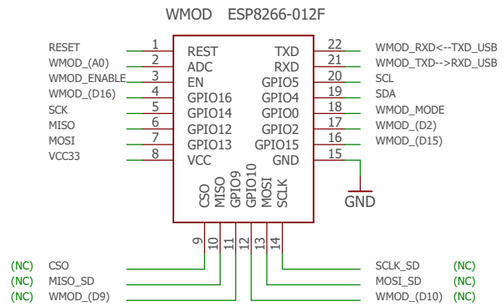

Low range communication optional module

ZIGBEE or SIGFOX on XBEE form factor

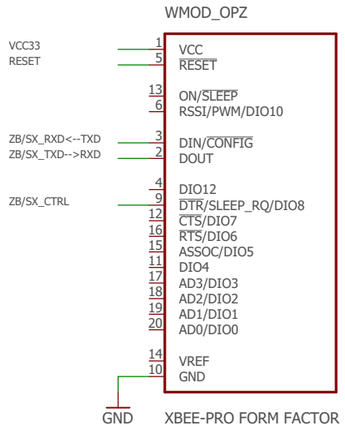

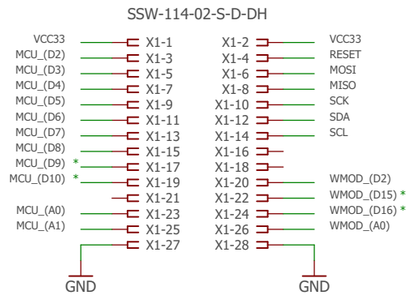

M1
(core)

ELECTRONIC ASSEMBLY SFTN pos. transflective graphic display

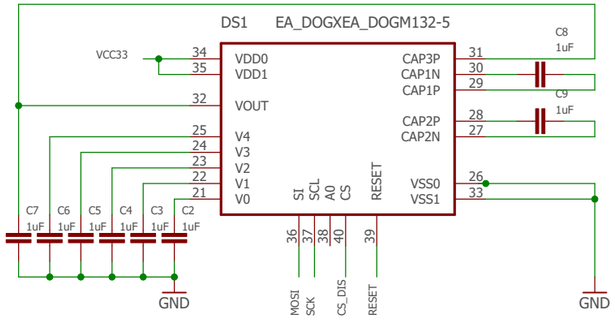

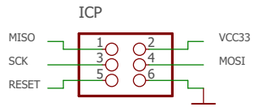

ICP connector for M1 MCU (ATMEGA328P) programming

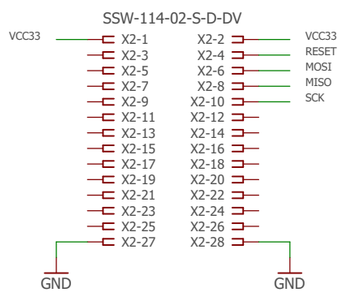

M2
(display)

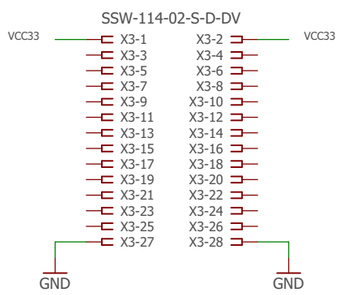

TRACO POWER encapsulated AC main power supply

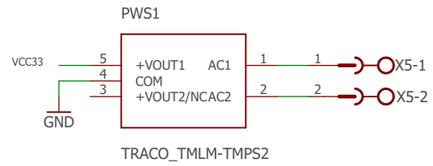

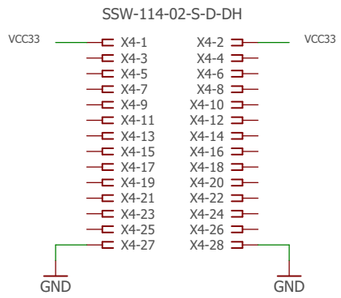

M3
(power)

Project and drawing guide lines. Connector pinout.
Main components dimensions and positions for ITALTRONIC CBOX Universal assembly

32connect.net S.r.l. via Carlo Noè, 45 21013 Gallarate (VA) Italy Ph. (+39) 0331 18 13 237	Smart NODE 503
	Project drawing guide lines
Author: Luca Olearo	26/11/2016 16.14
File: Smart NODE 503 guide lines	Sheet: 1/1