WIFI module (ESP8266-012F)

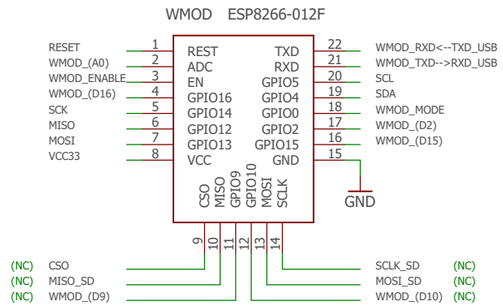

Low range communication optional module

ZIGBEE or SIGFOX on XBEE form factor

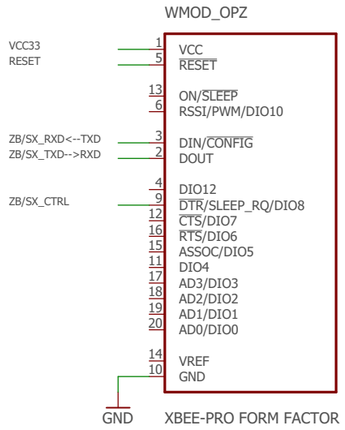

ELECTRONIC ASSEMBLY SFTN pos. transflective graphic display

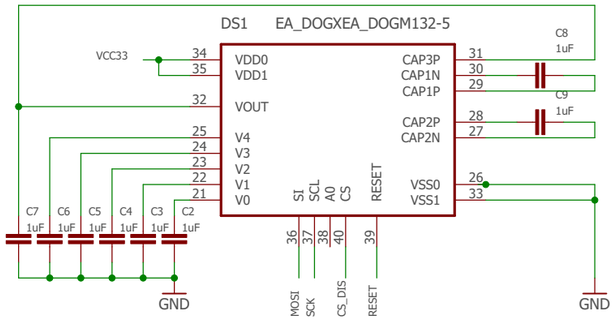

TRACO POWER encapsulated AC main power supply

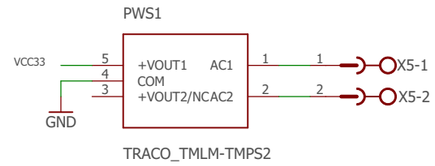

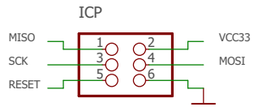

ICP connector for M1 MCU (ATMEGA328P) programming

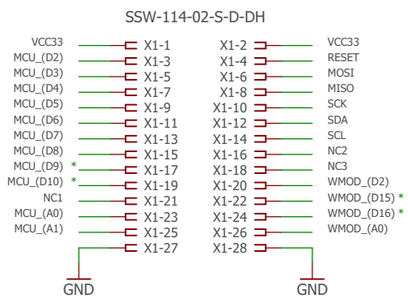

M1
(core)

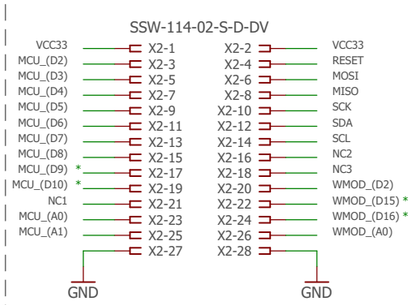

M2
(display)

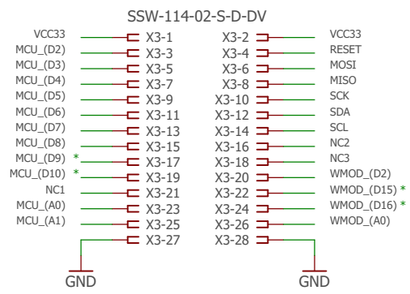

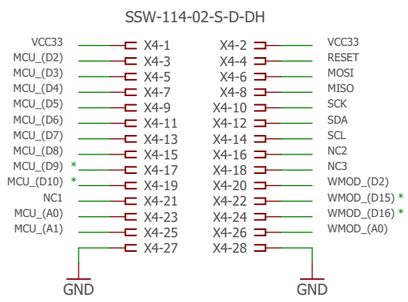

M3
(power)

Project and drawing guide lines. Connector pinout.
Main components dimensions and positions for ITALTRONIC CBOX Universal assembly

32connect.net S.r.l.
via Carlo Noè, 45 21013 Gallarate (VA) Italy Ph. (+39) 0331 18 13 237

Smart ezNODE 503	
Project drawing guide lines	
Author: Luca Olearo	05/12/2016 12.29
File: Smart ezNODE 503 guide lines	Sheet: 1/1