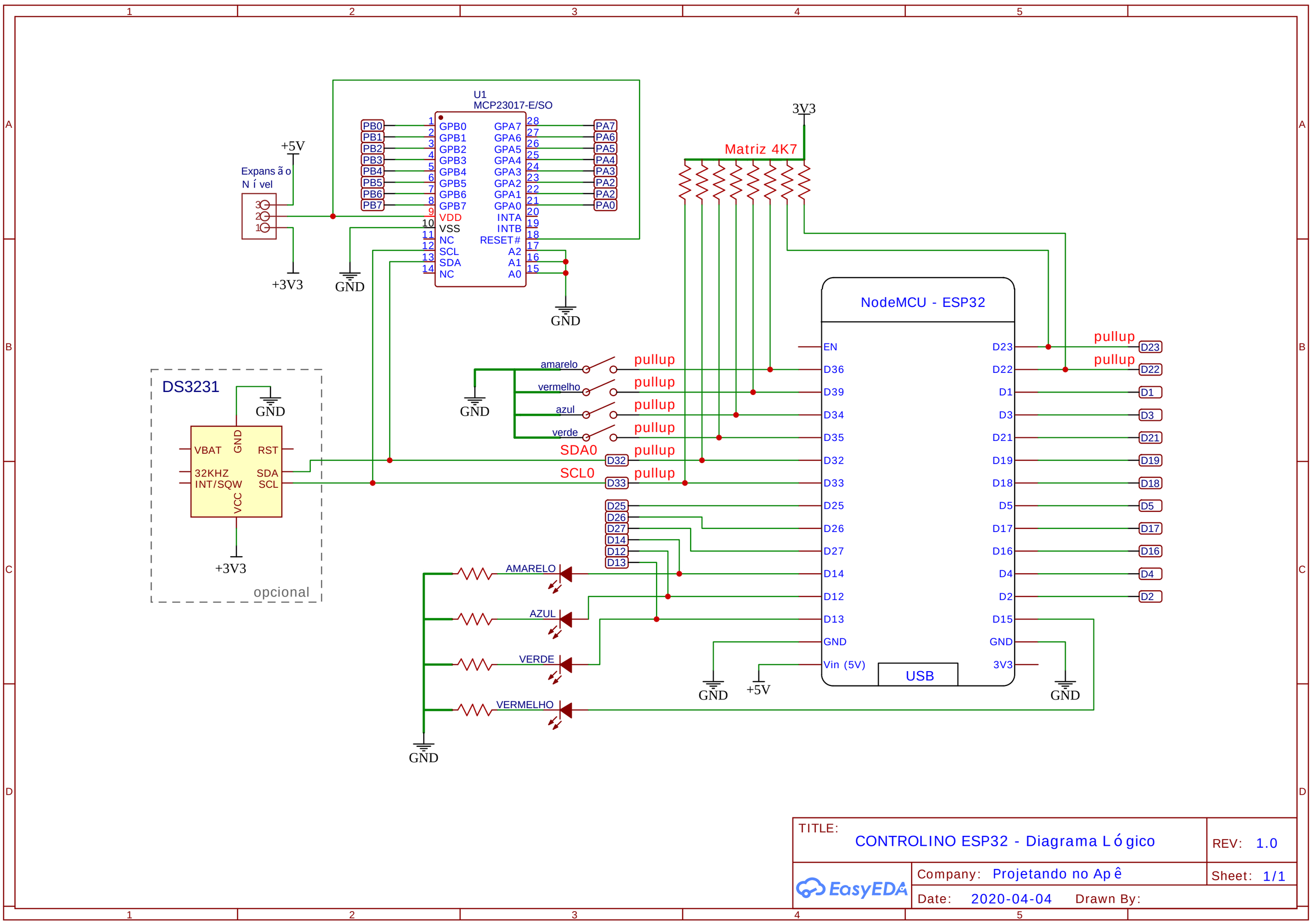


| | | |
|---|---|---|
| TITLE: CONTROLINO ESP32 - Diagrama L ó gico | | REV: 1.0 |
| EasyEDA | Company: Projetando no Ap ê | Sheet: 1/1 |
| | Date: 2020-04-04 Drawn By: | |