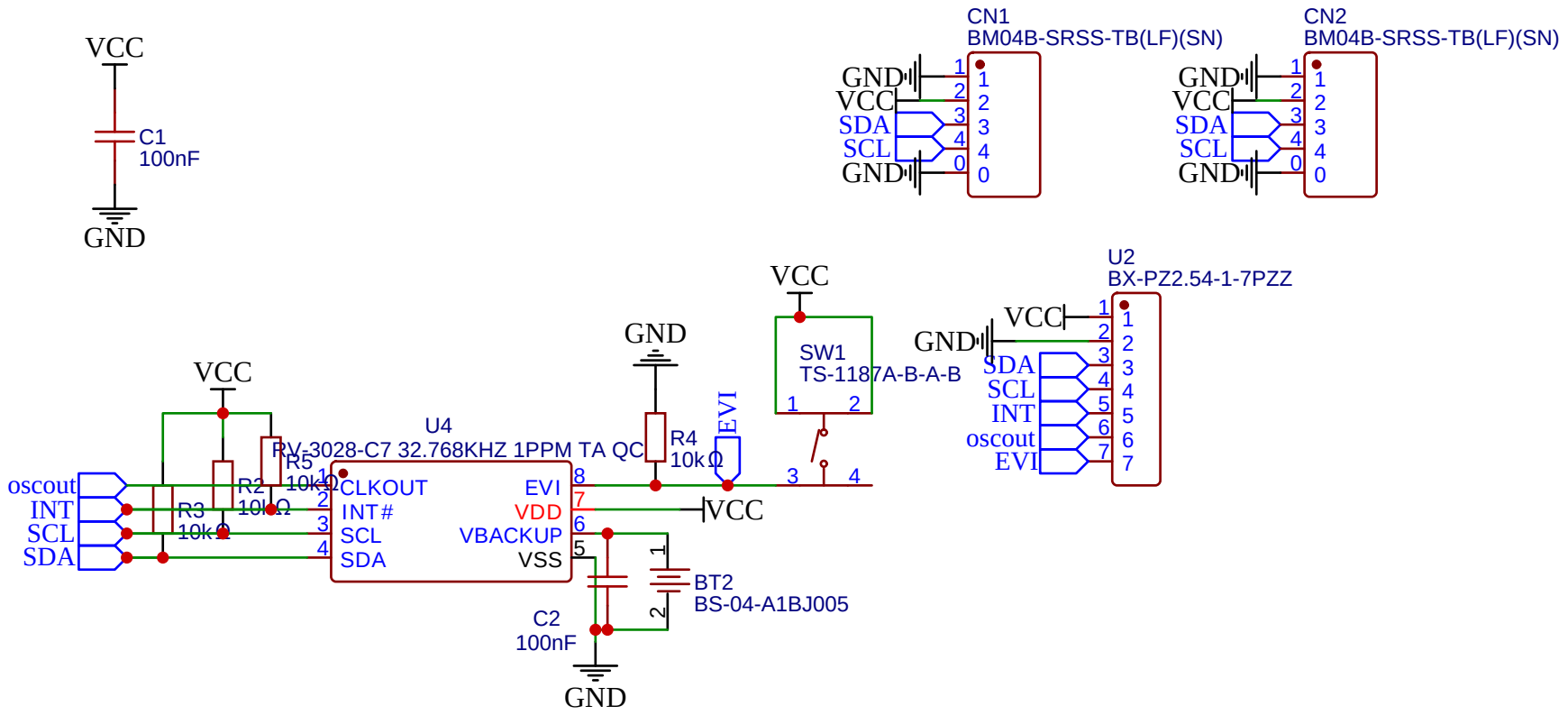

TITLE: Sheet_1		REV: 1.0
	Company: Prokyber	Sheet: 1/1
	Date: 2024-09-25	Drawn By: rizecek_1_cz