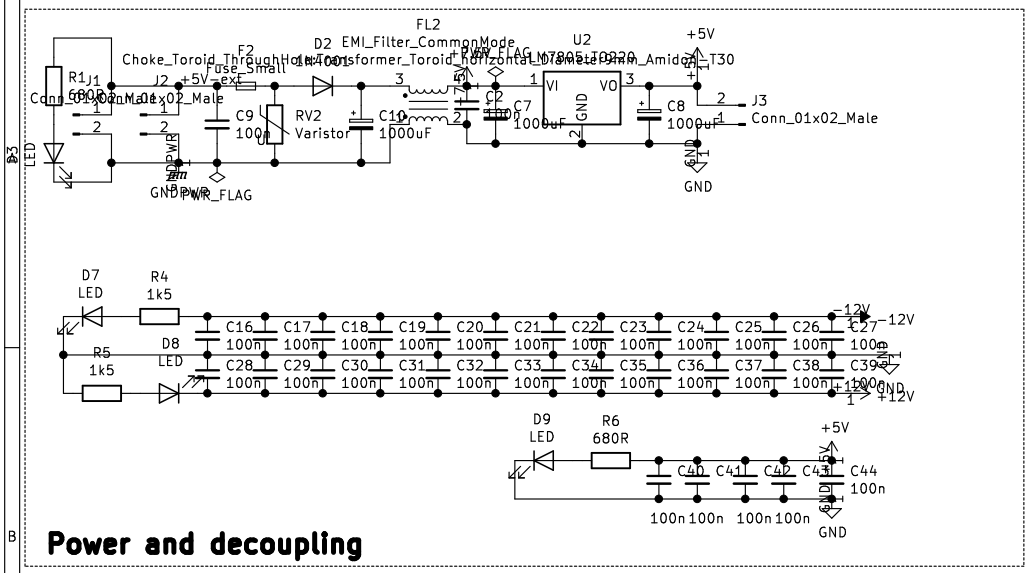

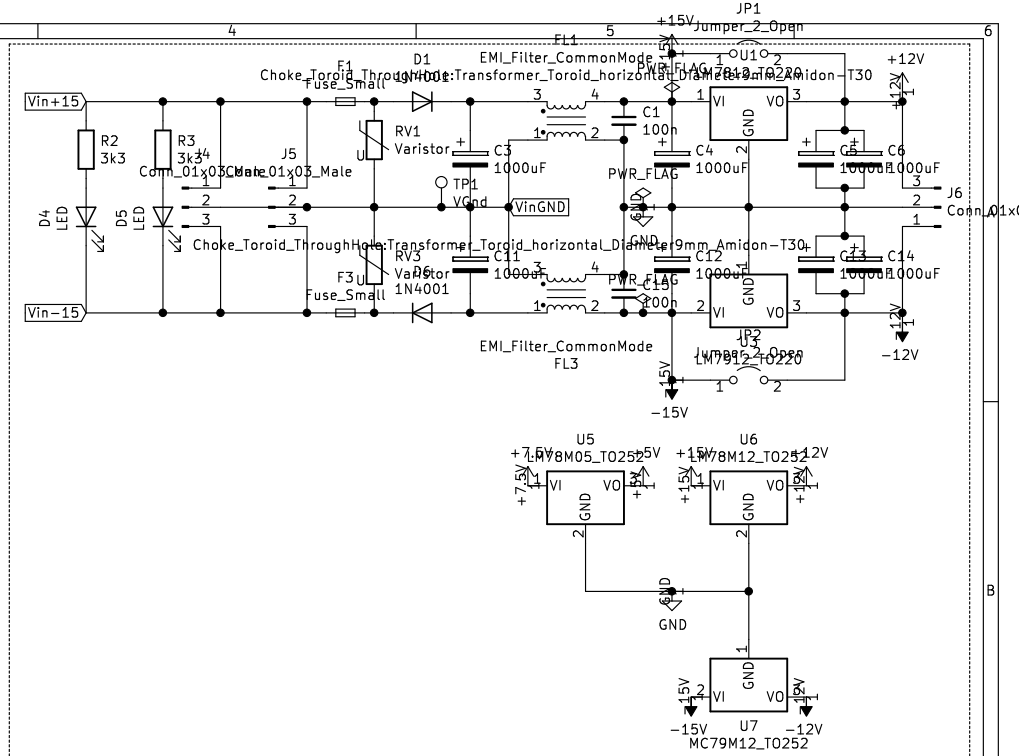

Modular Power Output

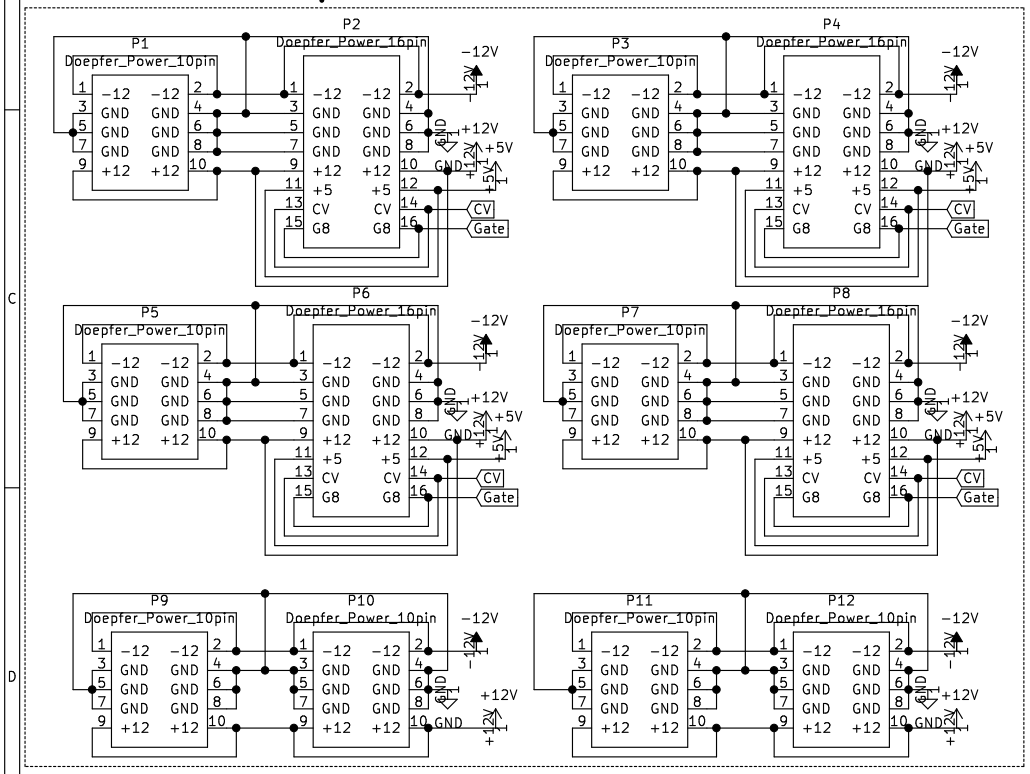

Virtual GND

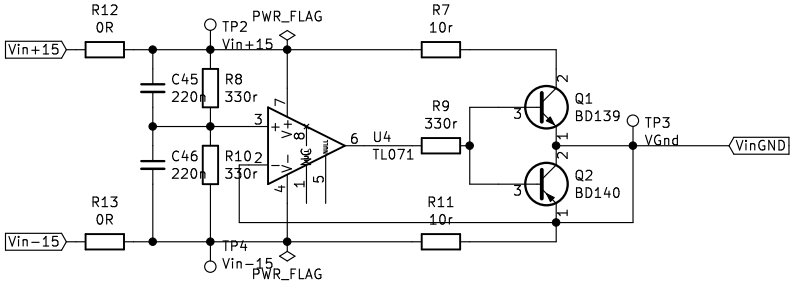

Johansen Engineering

Sheet: /

File: KicadEuropower.sch

Title: Eurorack Power

Size: A4	Date: 2019-01-12	Rev: Rev B
KiCad E.D.A. kicad (5.0.0)		Id: 1/1