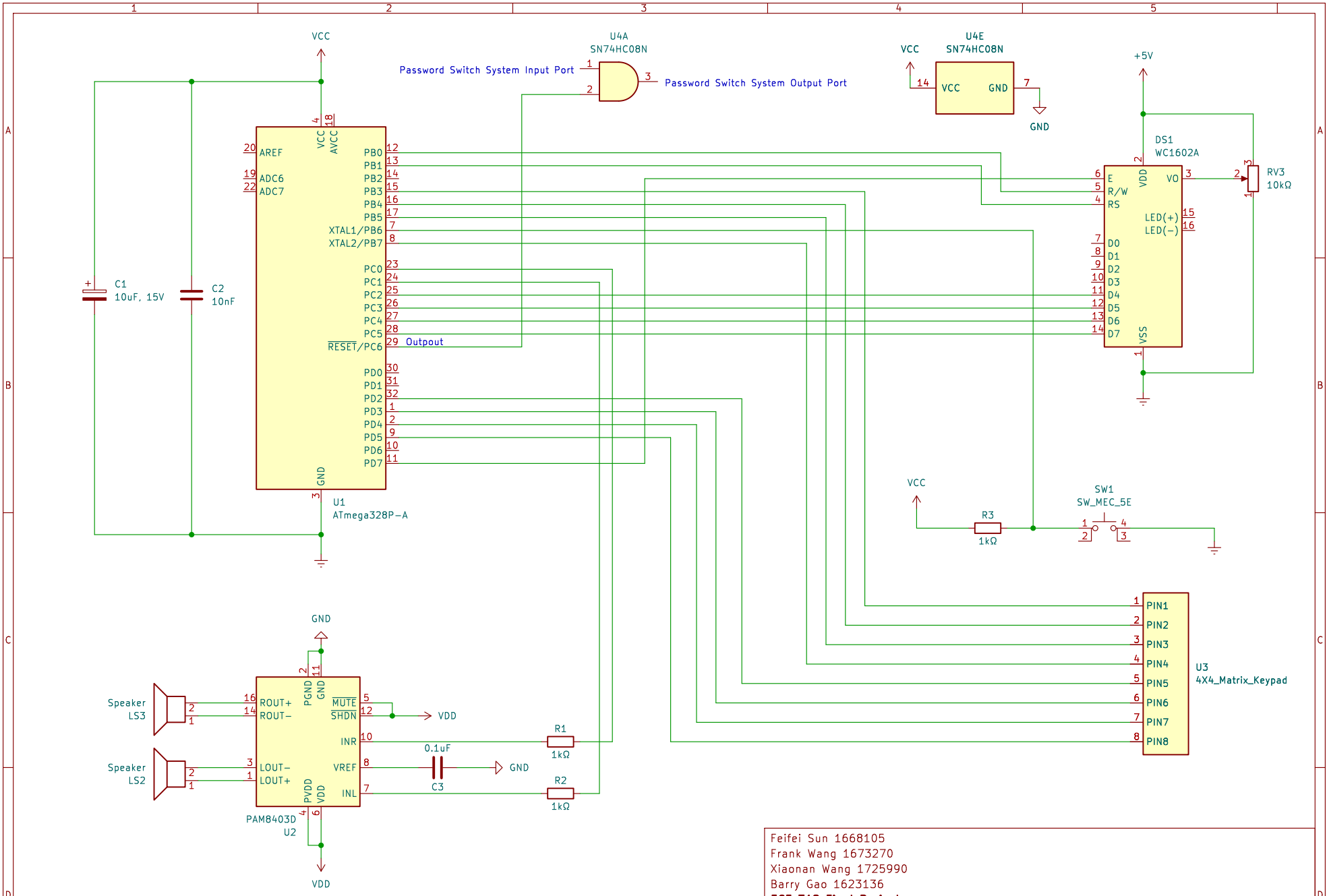

Feifei Sun 1668105
Frank Wang 1673270
Xiaonan Wang 1725990
Barry Gao 1623136
ECE 312 Final Project

Sheet: /
File: Final_Project.kicad_sch

Title: Password Switch System

Size: USLetter	Date: 2023-11-09	**Rev: 1**
KiCad E.D.A. eeschema 7.0.7		Id: 1/1