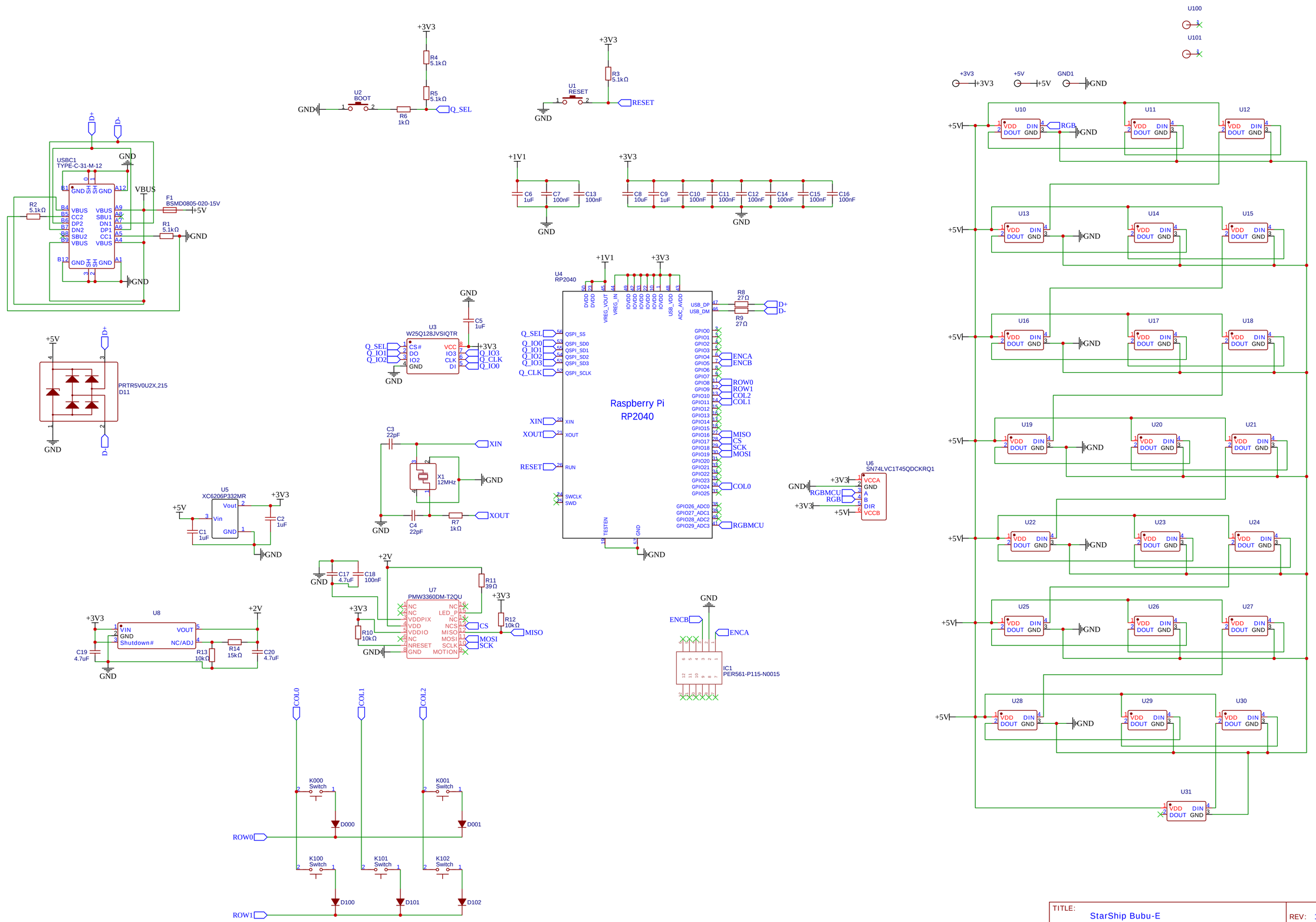

TITLE: StarShip Bubu-E	REV: 1.0
Company: ProtieusKeebs	Sheet: 1/1
Date: 2023-12-06 Drawn By: protieus	

EasyEDA