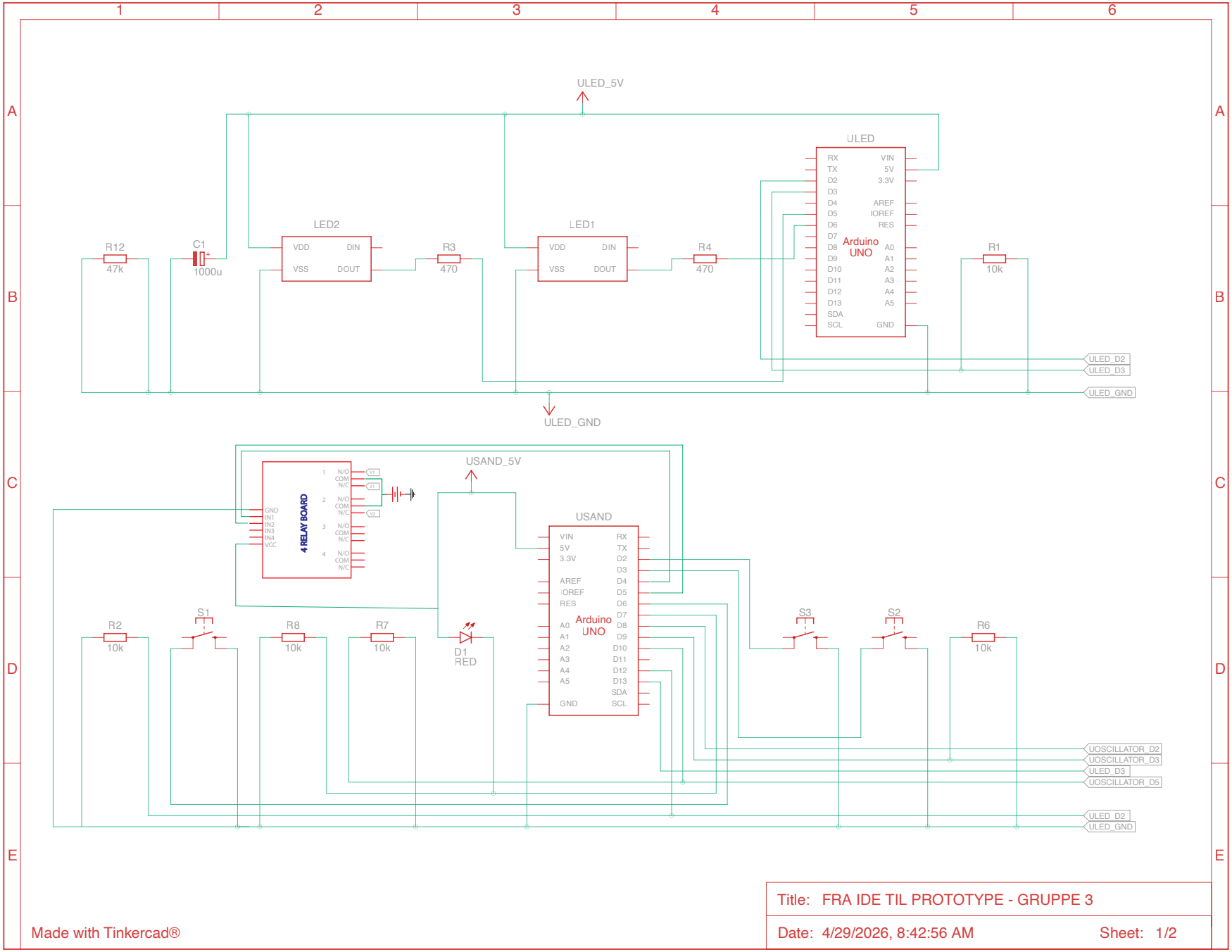


Made with Tinkercad®

Title: FRA IDE TIL PROTOTYPE - GRUPPE 3

Date: 4/29/2026, 8:42:56 AM

Sheet: 1/2

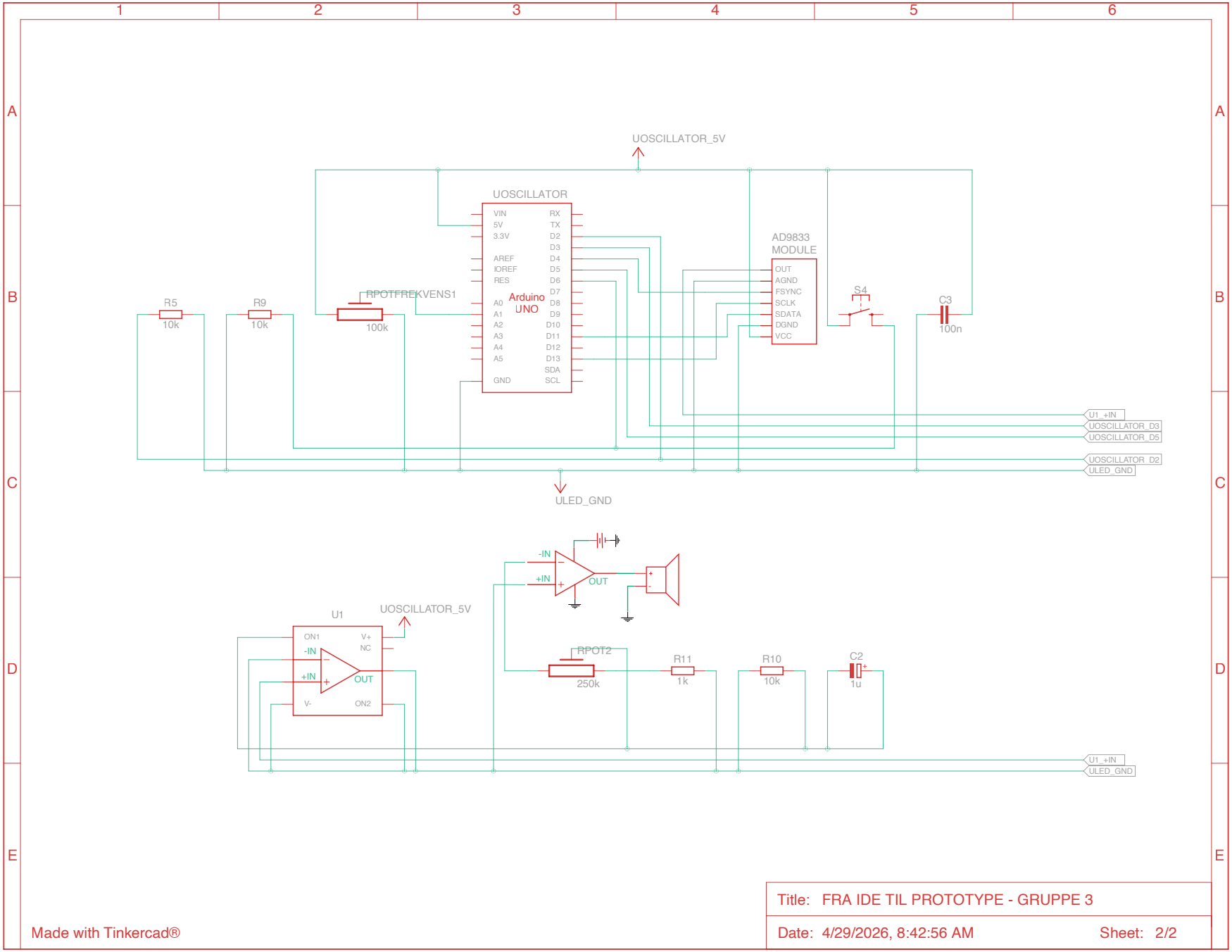


Made with Tinkercad®

Title: FRA IDE TIL PROTOTYPE - GRUPPE 3

Date: 4/29/2026, 8:42:56 AM

Sheet: 2/2

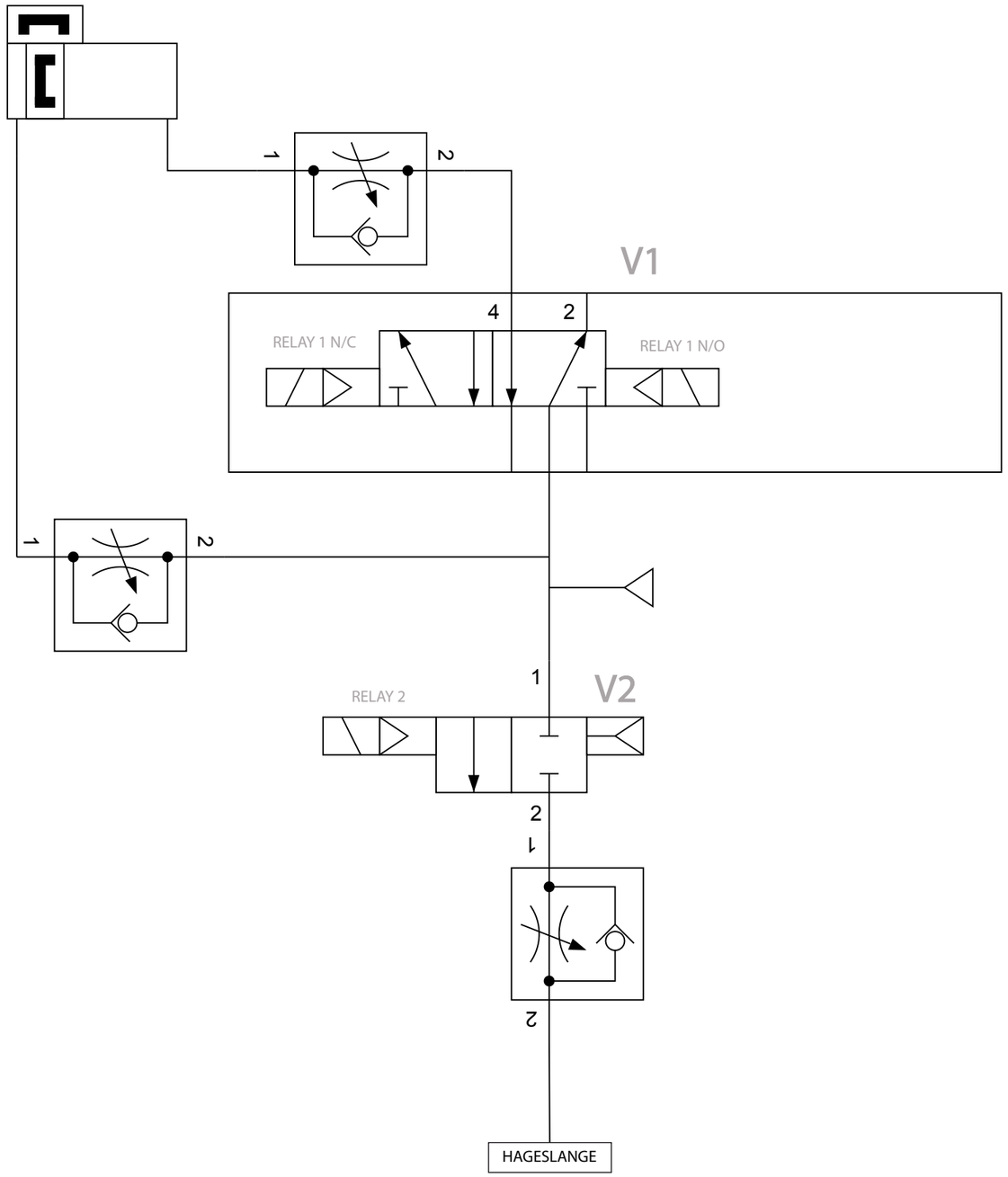
1
2
V1
4
2
RELAY 1 N/C
RELAY 1 N/O
1
2
1
RELAY 2
V2
2
1
2
HAGESLANGE