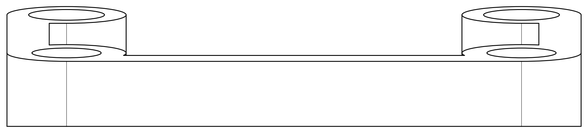

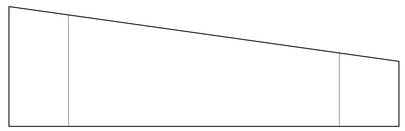

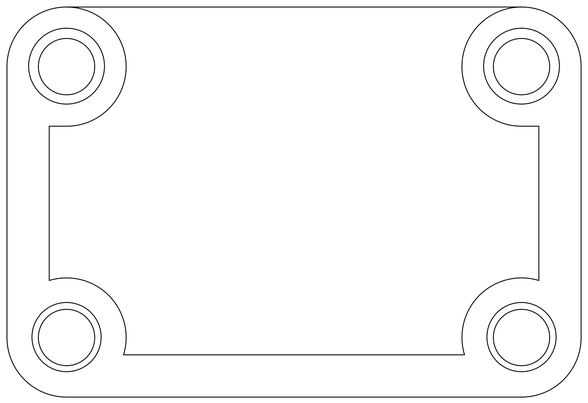

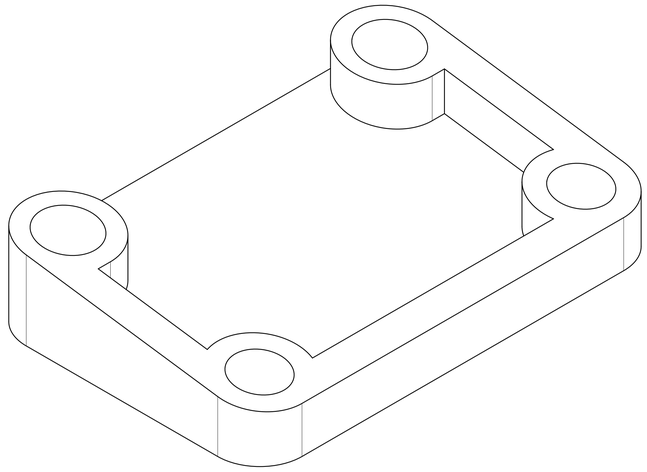

UNLESS OTHERWISE SPECIFIED: DIMENSIONS ARE IN MILLIMETERS		NAME	SIGNATURE	DATE
ANGULAR: ± °	DRAWN	Stijmen Janssen		2018-06-06
SURFACE FINISH	CHECKED			
	APPROVED			
DO NOT SCALE DRAWING				
BREAK ALL SHARP EDGES AND REMOVE BURRS				
FIRST ANGLE PROJECTION	MATERIAL		FINISH	

TITLE

SIZE A0	DWG NO. ----		REV. -
SCALE 10:1	WEIGHT	SHEET 1 of 1	