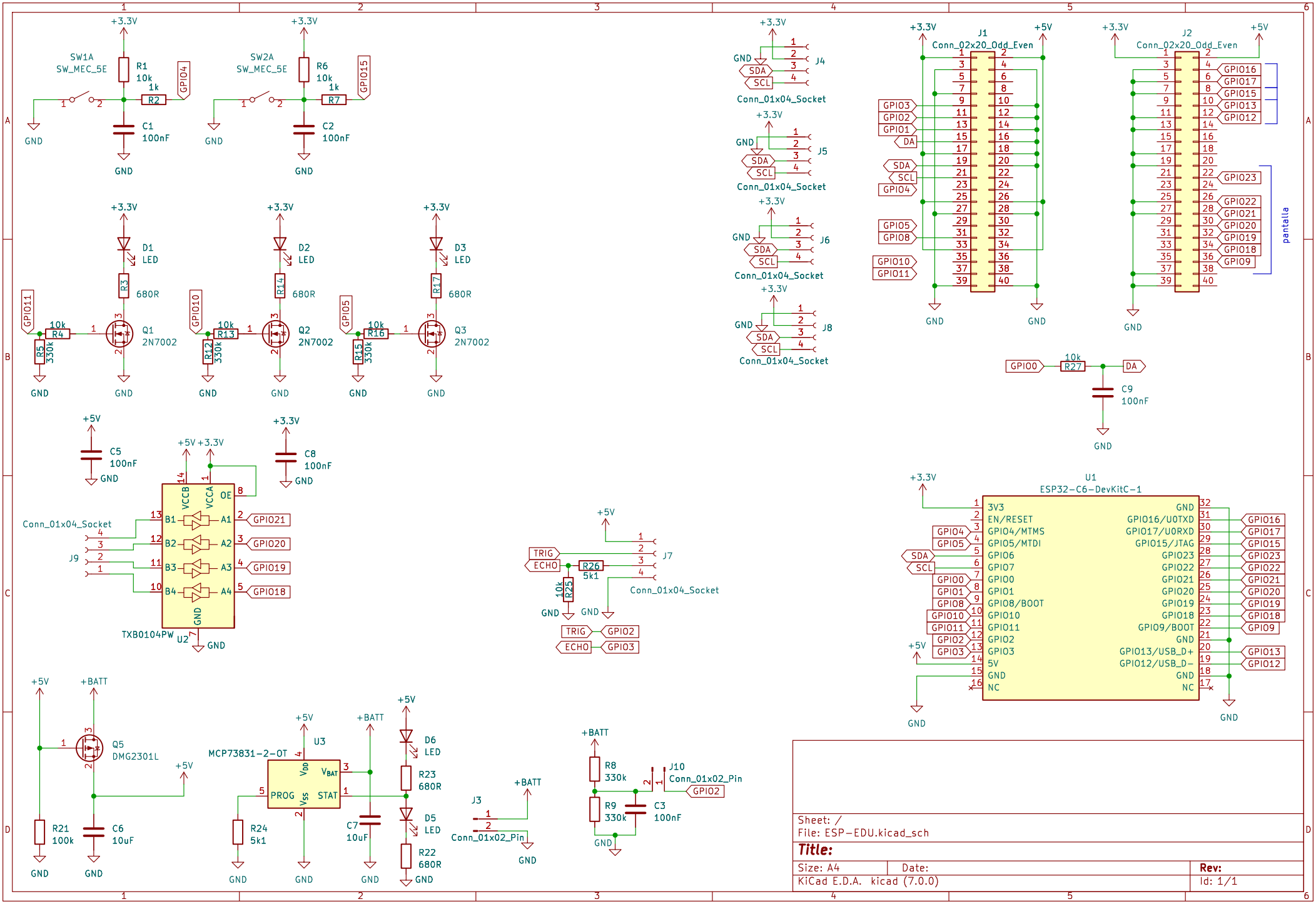


Sheet: /
File: ESP-EDU.kicad_sch

**Title:**

| | | |
|---|---|---|
| Size: A4 | Date: | Rev: |
| KiCad E.D.A. kicad (7.0.0) | | Id: 1/1 |