PLASTIC CONNECTORS

P SERIES

REDEL®

No reproduction or use without express permission of editorial or pictorial content, in any manner.

Table of contents

1P Series

Part numbering system ... 7
Shell style
Standard models (IP50) ... 8
Elbow socket models (IP50) ... 12
Disposable plug ... 13
Disposable socket ... 13
Watertight models (IP64) ... 14
Fluidic configuration ... 16
Mains power configuration ... 18
Insert configuration ... 19
Alignment key ... 20
Outer shell material ... 20
Contact type ... 20
Colour coding ... 20
Accessories ... 21
Tooling ... 23
Panel hole ... 24
PCB drilling pattern ... 24
Assembly instructions ... 26

2P Series

Part numbering system ... 33
Shell style
Standard models ... 34
Watertight models (IP66) ... 37
Fluidic configuration ... 39
Insert configuration ... 40
Alignment key ... 42
Outer shell material ... 42
Contact type ... 42
Colour coding ... 42
Accessories ... 43
Tooling ... 45
Panel hole ... 46
PCB drilling pattern ... 46
Assembly instructions ... 48
Assembly instructions for watertight models ... 50

3P Series

Part numbering system ... 55
Shell style
Standard models (IP61) ... 56
Insert configuration ... 58
Contact type ... 59
Colour coding ... 59
Accessories ... 60
Fibre optic contact ... 61
Recommended coaxial cables ... 62
Tooling ... 62
Panel hole ... 65
PCB drilling pattern ... 65
Assembly instructions ... 66
Mechanical latching characteristics and test voltage ... 68
Technical tables ... 69
Product safety notice ... 70

Precision modular connectors to suit your application

Since its creation in Switzerland in 1946 the LEMO Group has been recognized as a global leader of circular Push-Pull connectors and connector solutions. Today LEMO and its affiliated companies, REDEL and COELVER, are active in more than 80 countries with the help of over 40 subsidiaries and distributors.

Over 5’000 REDEL connectors

The modular design of the REDEL range provides over 5’000 connectors from ø 14 mm to ø 21 mm, capable of handling cable diameters up to 9.5 mm and up to 32 contacts.

This vast portfolio enables you to select the ideal connector configuration to suit almost any specific requirement in most markets, including medical devices, test and measurement instruments, machinery, audio video broadcast, telecommunications and military.

REDEL’s Push-Pull Self-Latching Connection System

This self-latching system is renowned worldwide for its easy and quick mating and unmating features. It provides absolute security against vibration, shock or pull on the cable, and facilitates operation in a very limited space.

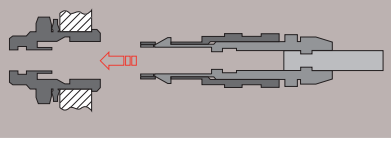

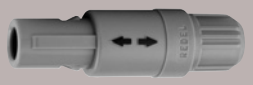

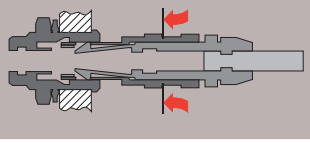

The REDEL self-latching system allows the connector to be mated by simply pushing the plug axially into the socket.

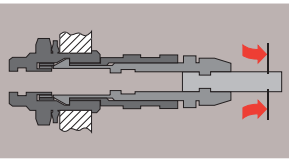

Once firmly latched, connection cannot be broken by pulling on the cable or any other component part other than the outer release sleeve.

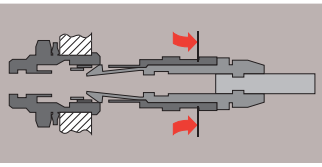

When required, the connector is disengaged by a single axial pull on the outer release sleeve. This first disengages the latches and then withdraws the plug from the socket.

UL Recognition

REDEL connectors are recognized by the Underwriters Laboratories (UL). The approval of the complete system (REDEL connector, cable and your equipment) will be easier because REDEL connectors are recognized.

CE Marking

CE marking means that the appliance or equipment bearing it complies with the protection requirements of one or several European safety directives.

CE marking applies to complete products or equipment, **but not to electromechanical components, such as connectors**.

RoHS

REDEL connector specifications conforms the requirements of the RoHS directive (2011/65/EU) of the European Parliament and the latest amendments. This directive specifies the restrictions of the use of hazardous substances in electrical and electronic equipment marketed in Europe.

REDEL connector range

The REDEL connectors are plastic Push-Pull connectors. These circular plastic connectors are especially adapted for applications such as medical electronics and test & measurement. REDEL offers a wide choice of connectors with various contact configurations: multipole contacts, coaxial, fibre optics and fluidic connectors. In addition, a range of one time use connectors and connectors for mains power is available. The REDEL connectors are available in 3 sizes, depending on the cable diameter.

Features & Benefits

- Aesthetically pleasing design
- Lightweight
- Plastic shell made of PSU or PEI
- Extensive sterilisation (over 100 cycles)
- Excellent electrical safety (touch & scoop proof)
- Wide choice of colours for easy identification (grey, blue, yellow, black, red, green and white)
- Large choice of keying to avoid cross mating
- Various contact types: solder, crimp, print and elbow print 90°
- Disposable models

Applications

- Medical electronics
- Test and measurement
- Industrial electronics
- Automotive

Series	1P	2P	3P
Environment	indoor / splash proof	indoor / outdoor	indoor / dripping water
Ingress[1] protection	IP50 / IP64	IP50 / IP66	IP61
Temperature range	PSU: -50°/ +150°C PEI: -50°/ +170°C	PSU: -50°/ +150°C PEI: -50°/ +170°C	PSU: -50°/ +150°C
Latching	Push-Pull self latching		
Insulator type	Multipole, Mains Power, Fluidic	Multipole, Hybrid: fluidic + LV, coaxial + LV	Multipole, Hybrid: high voltage + LV, coaxial + LV, fibre optic + LV, fluidic + LV
Contact type	Solder, crimp or print		
Other	Disposable models	-	-
Cable diameter	2.7 mm to 6.5 mm	3.2 mm to 9.2 mm	6.7 mm to 9.5 mm
Features	6 keyways	4 keyways	Insert Polarizations

Note: 1) mated connector.

Exploded view of the REDEL 1P

Straight plug

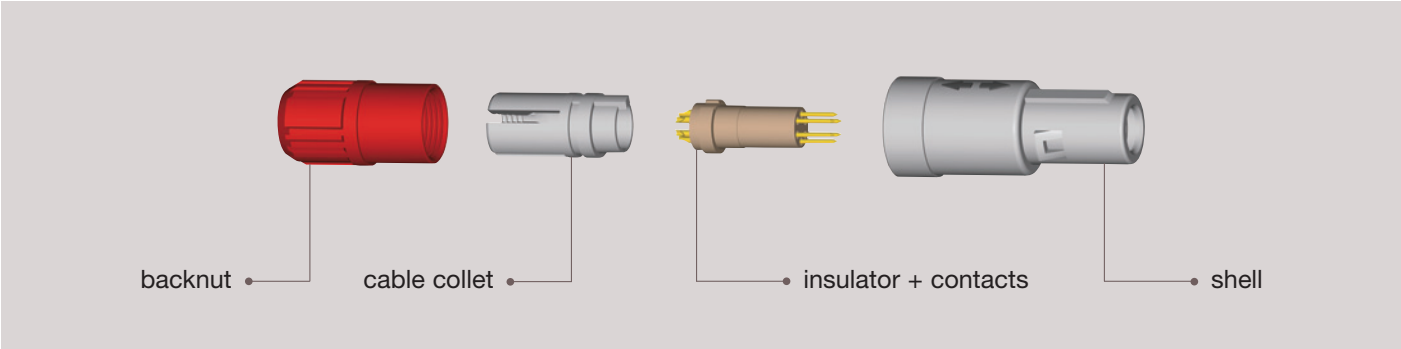

Straight plug with bend relief

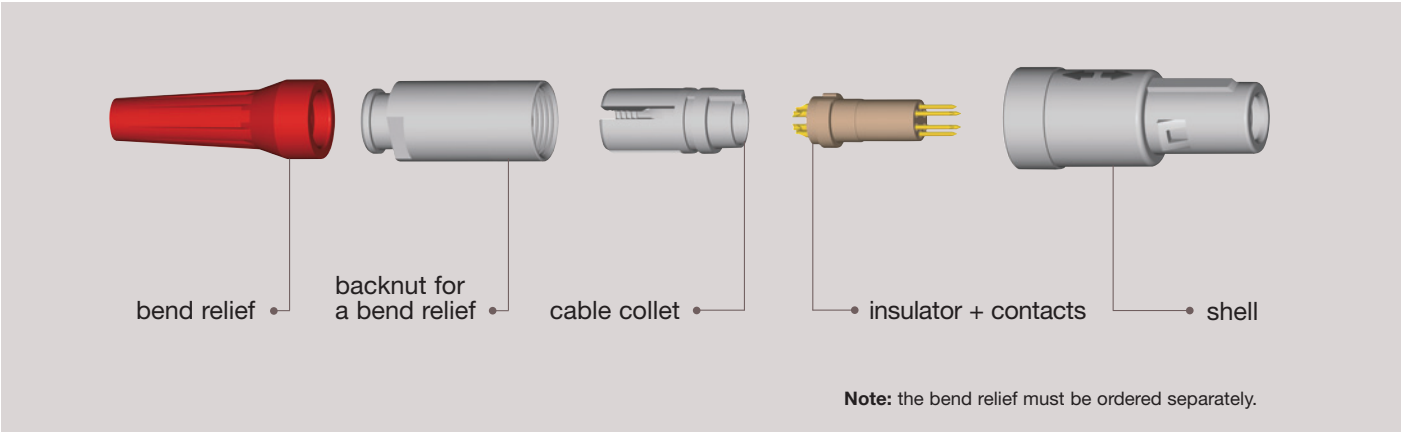

Note: the bend relief must be ordered separately.

Fixed socket

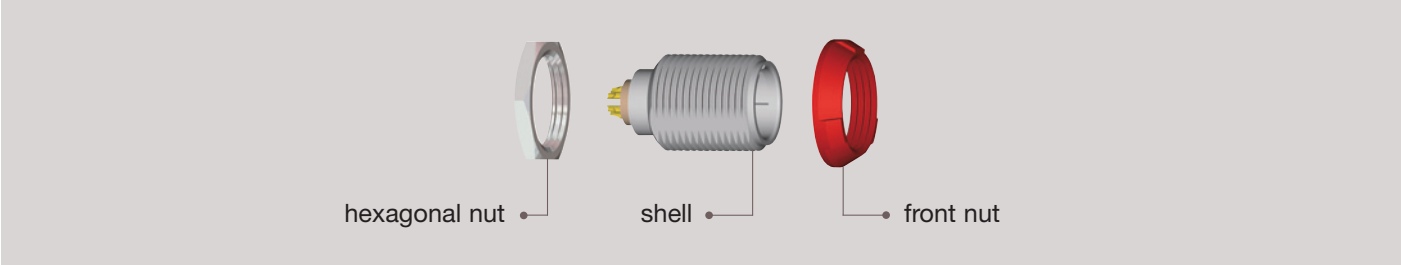

Free socket

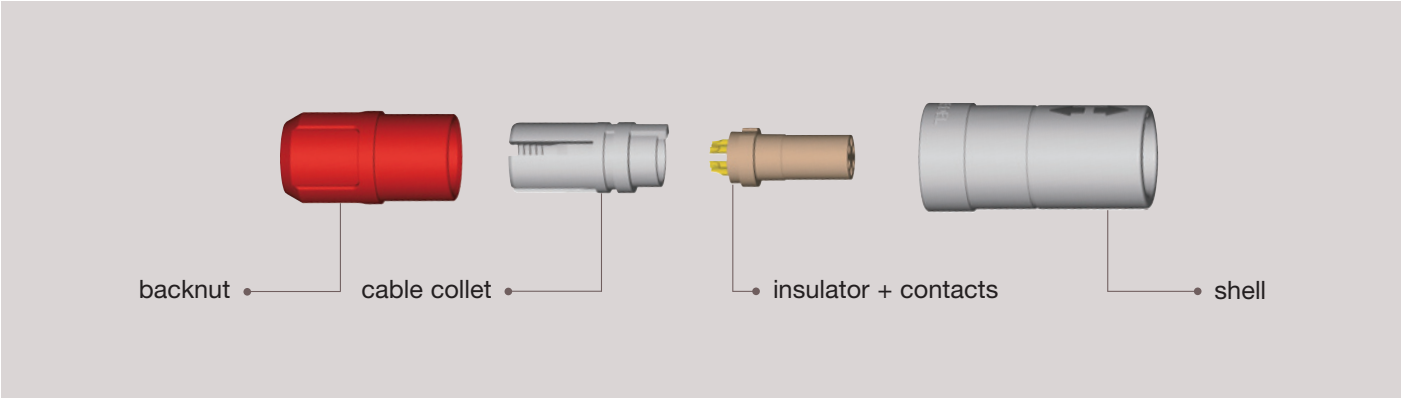

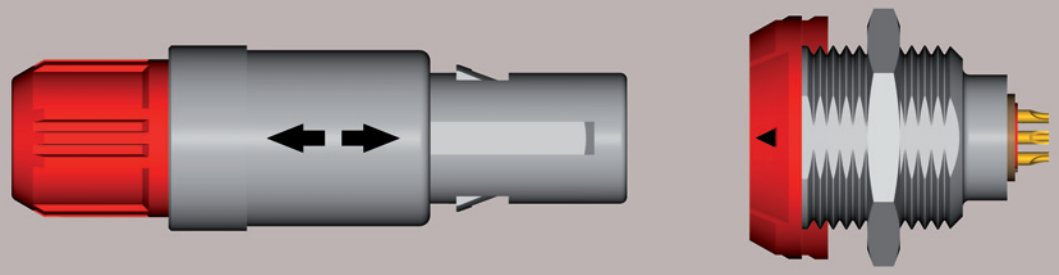

1P SERIES

1P Series

A well proven connector of a small size to accomodate cable diameter up to 6.5 mm and allow up to 14 solder contacts. Top quality lightweight and rugged materials have been chosen to optimize most applications. Polysulfone (PSU), UL certified as autoextinguishable, can be sterilized by gas or by steam. The contacts are gold-plated over copper and nickel to ensure at least 2000 mating/unmating cycles without significantly affecting the electrical characteristics. A keying system combined with colour coding can be incorporated on most connector models to assist in the prevention of mismating. Colour coding of the plug collet nut and socket flange will give an instant visual indication of connector compatibility.

Standard models (page 8 to 11)

Straight plugs

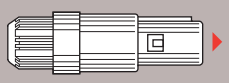

PA●

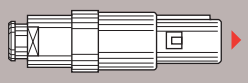

PA●

Fixed sockets

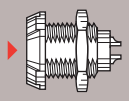

PL●

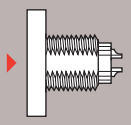

PM●

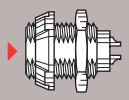

PK●

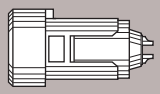

PY●

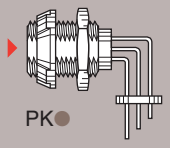

PK●

Free sockets

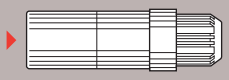

PR●

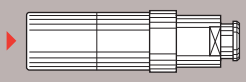

PR●

Fixed sockets

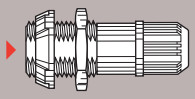

PT●

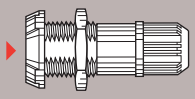

PD●

Elbow socket models (page 12)

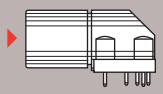

PP●

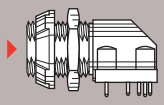

PX●

Disposable plug (limited use) (page 13)

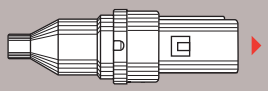

PJ●

Disposable socket (limited use) (page 13)

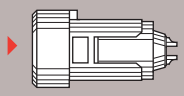

PY●

Watertight models (page 14 to 15)

Straight plug

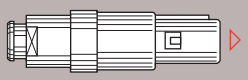

PF●

Fixed socket

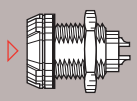

PN●

Free socket

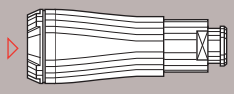

PS●

Fluidic configuration (page 16 to 17)

Straight plugs

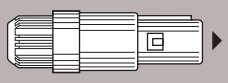

PA●

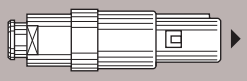

PA●

Fixed sockets

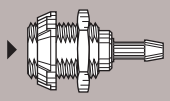

PK●

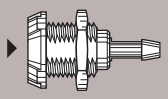

PL●

Mains power configuration (page 18)

Straight plug

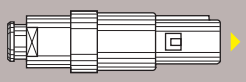

PAH

Fixed socket

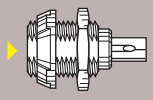

PKH

Part numbering system

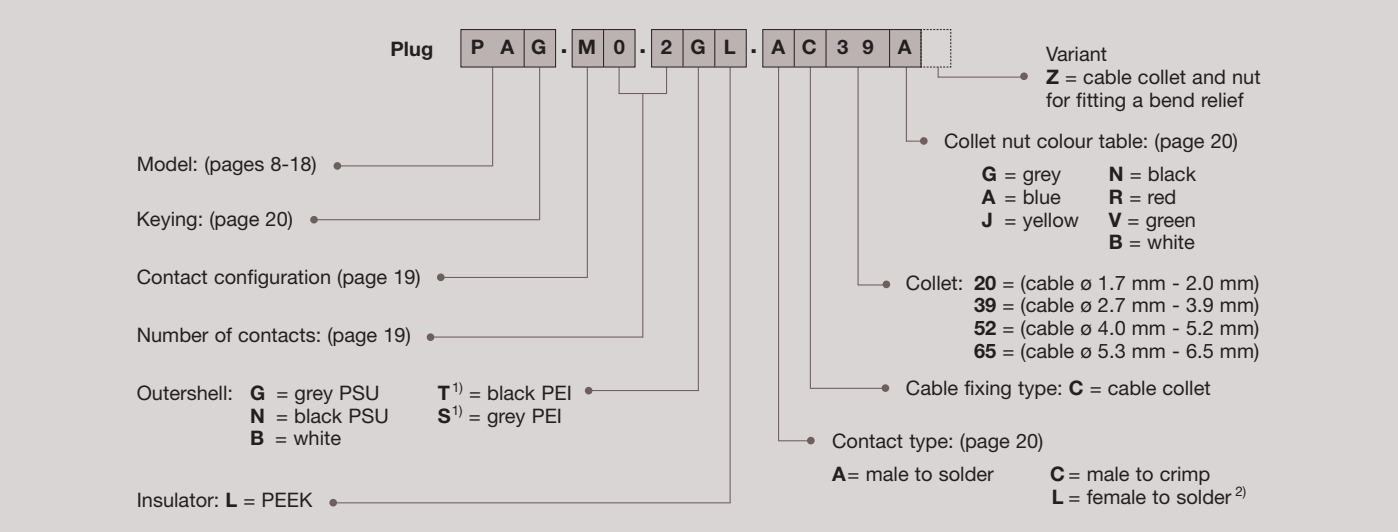

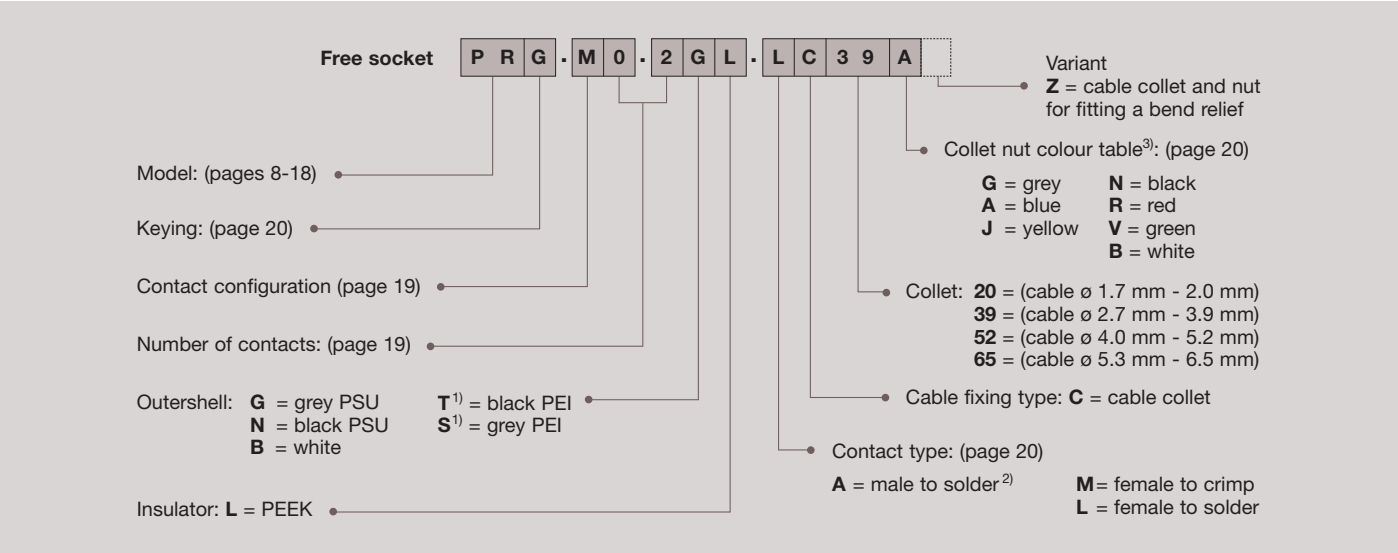

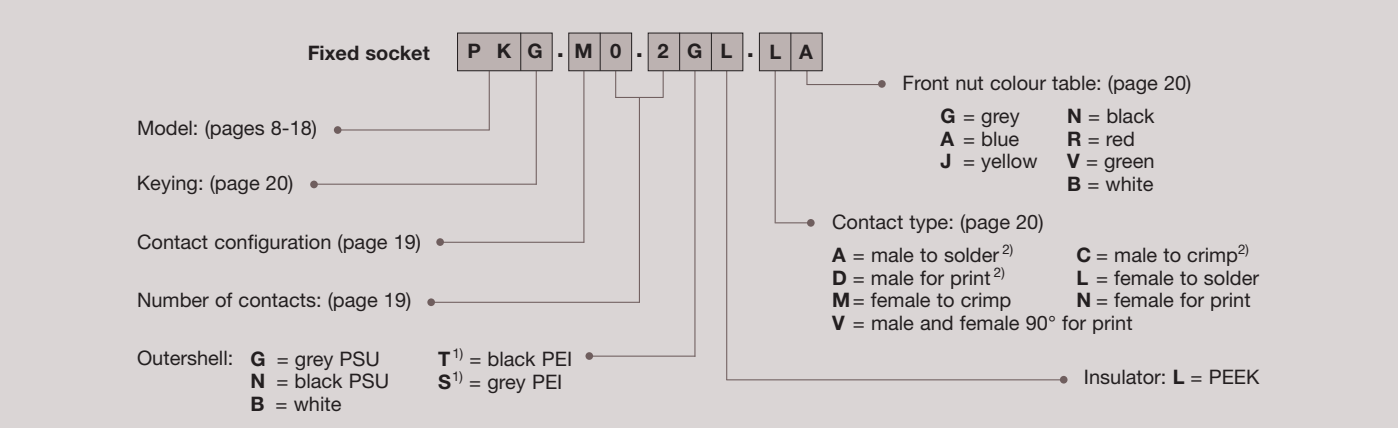

PAG.M0.2GL.AC39A Straight plug with cable collet and alignment key (G), multipole type with 2 male contacts to solder, grey PSU outershell, PEEK insulator, collet for a cable ø 2.7 to 3.9 mm and blue collet nut.

PRG.M0.2GL.LC39A Free socket with cable collet and alignment key (G), multipole with 2 female contacts to solder, grey PSU outershell, PEEK insulator, collet for a cable ø 2.7 to 3.9 mm and blue collet nut.

PKG.M0.2GL.LA Fixed socket with two nuts and alignment key (G), multipole type with 2 female contacts to solder, grey PSU outershell, PEEK insulator, and blue plastic front nut.

Note: 1) for extensive steam sterilization we recommend Polyetherimide ULTEM® (PEI).
2) contact available only with H and J keying and with 8, 10 or 14 contacts (inverted contacts).
3) collet nut and front nut colour table for PT● and PD● models.

Standard models (IP50)

P . M . .

Fixed socket

1 Outershell
2 Insulator
3 Female contact
4 Hexagonal nut
5 Front nut

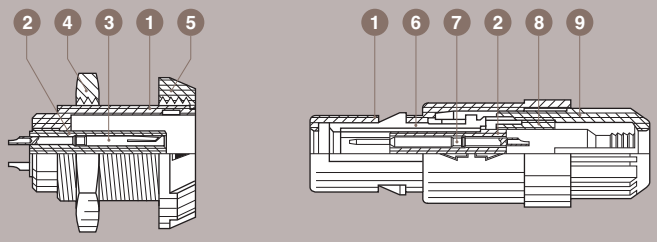

Straight plug

1 Outershell
2 Insulator
6 Latch sleeve
7 Male contact
8 Cable collet
9 Backnut

Characteristics	Value	Standards
Average retention force when pulling on the cable 1N = 0.102 kg	90 N	IEC 60512-8 test 15f
Cable retention force (depends on cable construction) 1N = 0.102 kg	50 - 150 N	IEC 60512-9 test 17c

Characteristics	Value	Standards
Endurance (latching)	> 2000 cycles	IEC 60512-5 test 9a
Working temperature range (PSU)	-50/+150°C	–
Working temperature range (PEI)	-50/+170°C	–

PAG Straight plug, key (G) or keys (A, B, C, H and J), with cable collet

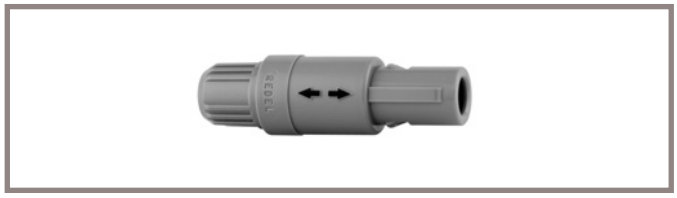

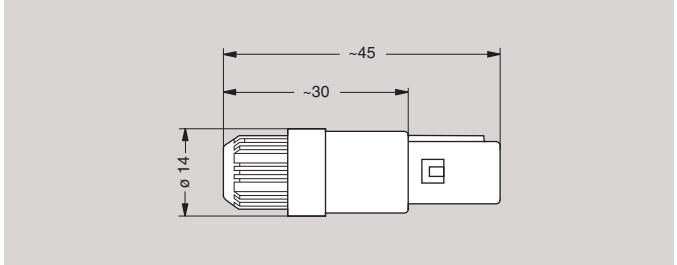

Part Number	Cable ø	
	min	max
PAG.M●.●GL.AC20G	1.7	2.0
PAG.M●.●GL.AC39G	2.7	3.9
PAG.M●.●GL.AC52G	4.0	5.2
PAG.M●.●GL.AC65G	5.3	6.5

Note: replace ●.● by contact configuration (see page 19).

PAG Straight plug, key (G) or keys (A, B, C, H and J), with cable collet and nut for fitting a bend relief

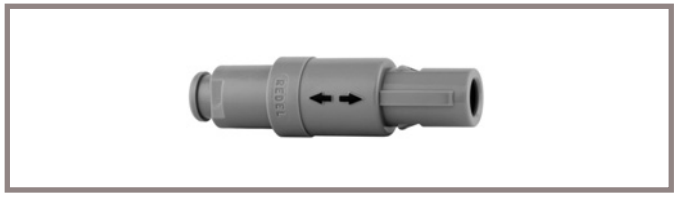

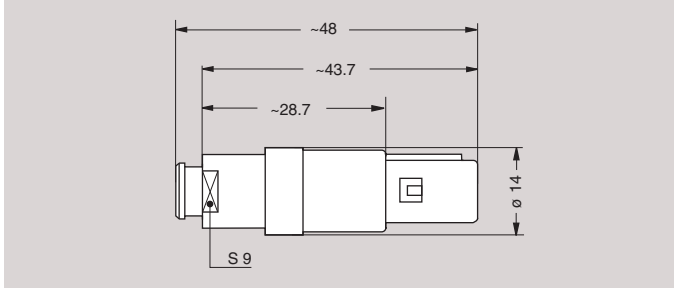

Part Number	Cable ø	
	min	max
PAG.M●.●GL.AC20GZ	1.7	2.0
PAG.M●.●GL.AC39GZ	2.7	3.9
PAG.M●.●GL.AC52GZ	4.0	5.2
PAG.M●.●GL.AC65GZ	5.3	6.5

Note: replace ●.● by contact configuration (see page 19).
The bend relief must be ordered separately (see page 22).

Note: all dimensions are in millimeters

PLG Fixed socket, key (G) or keys (A, B, C, H and J), nut fixing

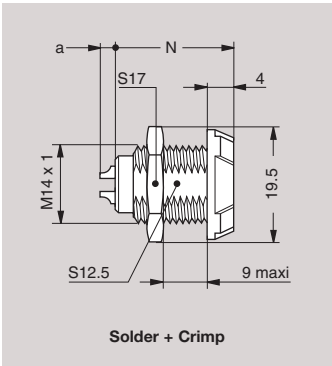

Solder + Crimp

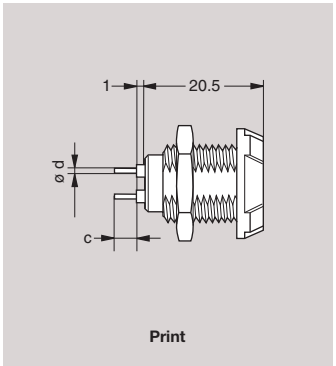

Print

Part Number	number of contacts	Contact					
		Solder		Crimp		Print	
		N	a max	N	a	c	ø d
PLG.M0.2GL.LG	2	20.5	2.5	22.2	0	5	0.7
PLG.M0.4GL.LG	4	20.5	2.5	22.2	0	5	0.7
PLG.M0.5GL.LG	5	20.5	2.5	22.2	0	5	0.7
PLG.M0.6GL.LG	6	20.5	2.5	22.2	0	3	0.5
PLG.M0.7GL.LG	7	20.5	4.5	22.2	0	3	0.5
PLG.M0.8GL.LG	8	20.5	4.5	22.2	0	3	0.5
PLG.M0.9GL.LG	9	20.5	3.9	–	–	3	0.5
PLG.M1.0GL.LG	10	20.5	3.9	–	–	3	0.5
PLG.M1.4GL.LG	14	20.5	3.9	–	–	3	0.5

Note: for PCB drilling pattern and panel hole see page 24.

PKG Fixed socket, key (G) or keys (A, B, C, H and J), with two nuts (back panel mounting)

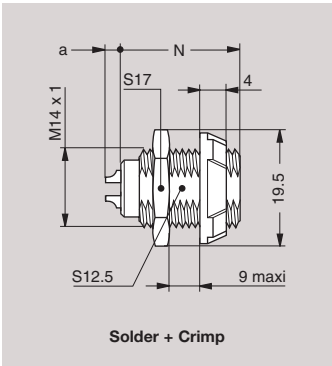

Solder + Crimp

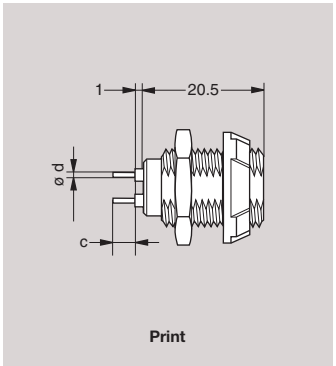

Print

Part Number	number of contacts	Contact					
		Solder		Crimp		Print	
		N	a max	N	a	c	ø d
PKG.M0.2GL.LG	2	20.5	2.5	22.2	0	5	0.7
PKG.M0.4GL.LG	4	20.5	2.5	22.2	0	5	0.7
PKG.M0.5GL.LG	5	20.5	2.5	22.2	0	5	0.7
PKG.M0.6GL.LG	6	20.5	2.5	22.2	0	3	0.5
PKG.M0.7GL.LG	7	20.5	4.5	22.2	0	3	0.5
PKG.M0.8GL.LG	8	20.5	4.5	22.2	0	3	0.5
PKG.M0.9GL.LG	9	20.5	3.9	–	–	3	0.5
PKG.M1.0GL.LG	10	20.5	3.9	–	–	3	0.5
PKG.M1.4GL.LG	14	20.5	3.9	–	–	3	0.5

Note: for PCB drilling pattern and panel hole see page 24.

PKG Fixed socket, key (G) or keys (A, B, C, H and J), with two nuts, with 90° contacts (back panel mounting)

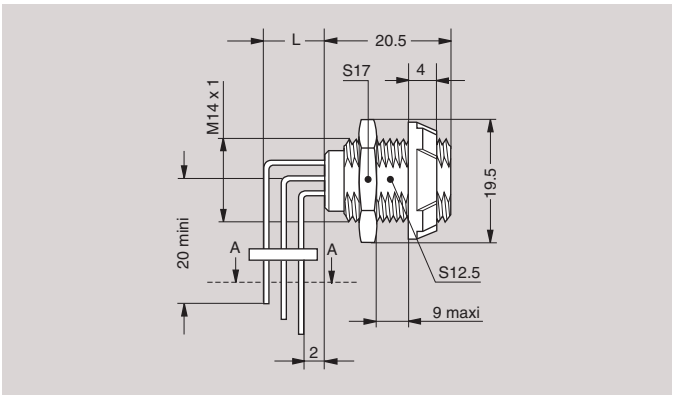

Part Number	number of contacts	L
PKG.M0.2GL.VG	2	5.4
PKG.M0.4GL.VG	4	5.2
PKG.M0.5GL.VG	5	7.7
PKG.M0.6GL.VG	6	7.7
PKG.M0.7GL.VG	7	7.7
PKG.M0.8GL.VG	8	7.7
PKG.M0.9GL.VG	9	10.3
PKG.M1.0GL.VG	10	10.3
PKG.M1.4GL.VG	14	12.9

Note: for PCB drilling pattern see page 25.
Panel hole see page 24.

Note: all dimensions are in millimeters

PMG Fixed socket, key (G) or keys (A, B, C, H and J), with square flange

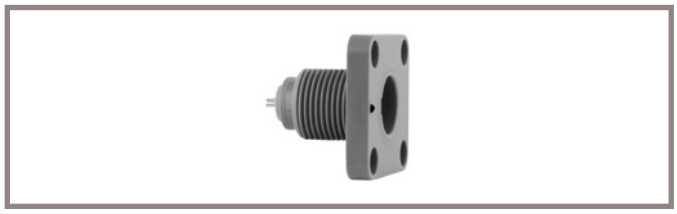

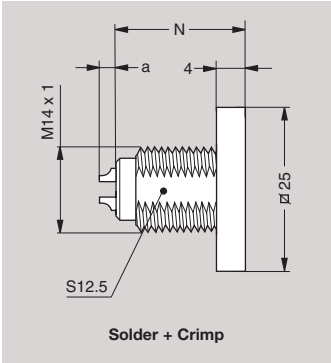

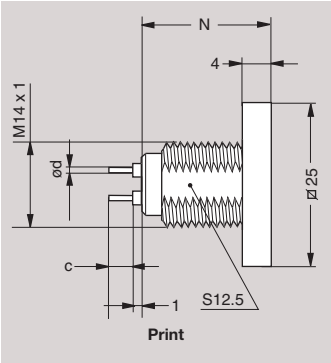

Part Number	number of contacts	Contact					
		Solder		Crimp		Print	
		N	a max	N	a	c	ø d
PMG.M0.2GL.LG	2	20.5	2.5	22.2	0	5	0.7
PMG.M0.4GL.LG	4	20.5	2.5	22.2	0	5	0.7
PMG.M0.5GL.LG	5	20.5	2.5	22.2	0	5	0.7
PMG.M0.6GL.LG	6	20.5	2.5	22.2	0	3	0.5
PMG.M0.7GL.LG	7	20.5	4.5	22.2	0	3	0.5
PMG.M0.8GL.LG	8	20.5	4.5	22.2	0	3	0.5
PMG.M0.9GL.LG	9	20.5	3.9	–	–	3	0.5
PMG.M1.0GL.LG	10	20.5	3.9	–	–	3	0.5
PMG.M1.4GL.LG	14	20.5	3.9	–	–	3	0.5

Note: for PCB drilling pattern see page 24.
Panel hole see page 24.

PYG Fixed socket, key (G) or keys (A, B or H), snap-on fixing

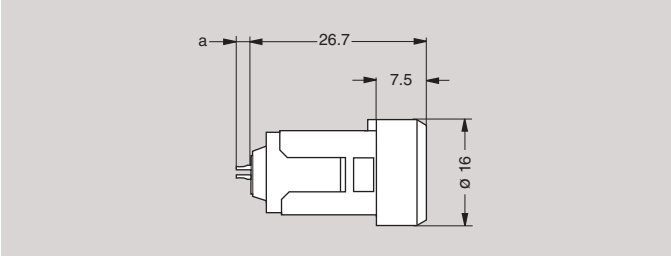

Part Number	number of contacts	Solder
		a max
PYG.M0.2GL.LG	2	2.5
PYG.M0.4GL.LG	4	2.5
PYG.M0.5GL.LG	5	2.5
PYG.M0.6GL.LG	6	2.5
PYG.M0.7GL.LG	7	2.5
PYG.M0.8GL.LG	8	2.5
PYG.M0.9GL.LG	9	4.0
PYG.M1.0GL.LG	10	4.0
PYG.M1.4GL.LG	14	4.0

Note: only with A, B or G keying (2 to 14 contacts) or H (8,10 or 14 contacts).
The insulator is made of PEEK.

PRG Free socket, key (G) or keys (A, B, C, H and J), with cable collet

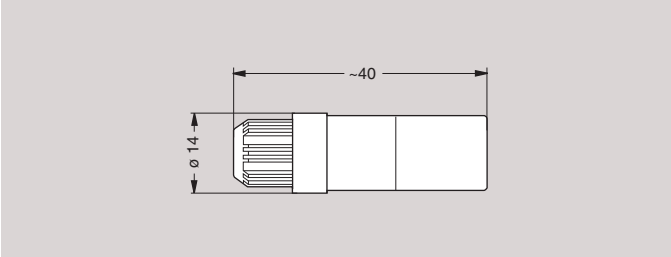

Part Number	Cable ø	
	min	max
PRG.M●.●GL.LC20G	1.7	2.0
PRG.M●.●GL.LC39G	2.7	3.9
PRG.M●.●GL.LC52G	4.0	5.2
PRG.M●.●GL.LC65G	5.3	6.5

Note: replace ●.● by contact configuration (see page 19).

Note: all dimensions are in millimeters

PRG Free socket, key (G) or keys (A, B, C, H and J), with cable collet and nut for fitting a bend relief

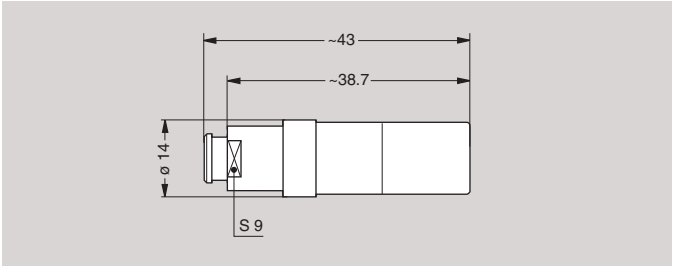

Part Number	Cable ø	
	min	max
PRG.M●.●GL.LC20GZ	1.7	2.0
PRG.M●.●GL.LC39GZ	2.7	3.9
PRG.M●.●GL.LC52GZ	4.0	5.2
PRG.M●.●GL.LC65GZ	5.3	6.5

Note: replace ●.● by contact configuration (see page 19).
The bend relief must be ordered separately (see page 22).

PTG Fixed socket, key (G) or keys (A, B, C, H and J), with two nuts and cable collet (back panel mounting)

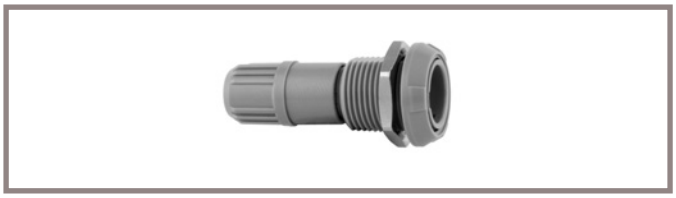

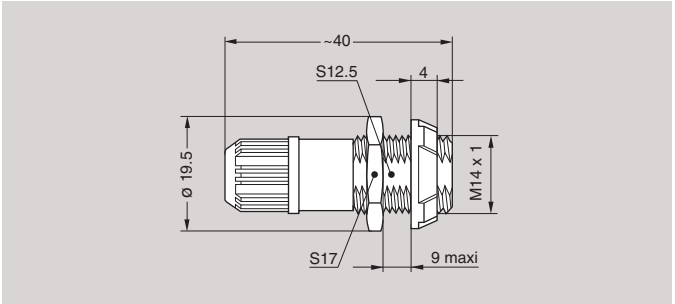

Part Number	Cable ø	
	min	max
PTG.M●.●GL.LC20G	1.7	2.0
PTG.M●.●GL.LC39G	2.7	3.9
PTG.M●.●GL.LC52G	4.0	5.2
PTG.M●.●GL.LC65G	5.3	6.5

Note: replace ●.● by contact configuration (see page 19).
Panel hole see page 24.

PDG Fixed socket, key (G) or keys (A, B, C, H and J), nut fixing and cable collet

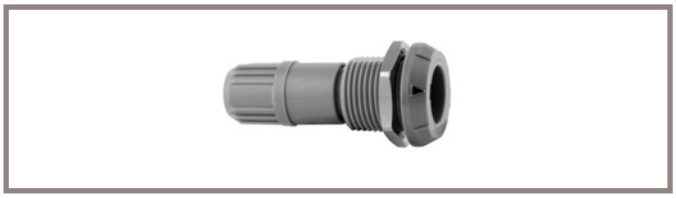

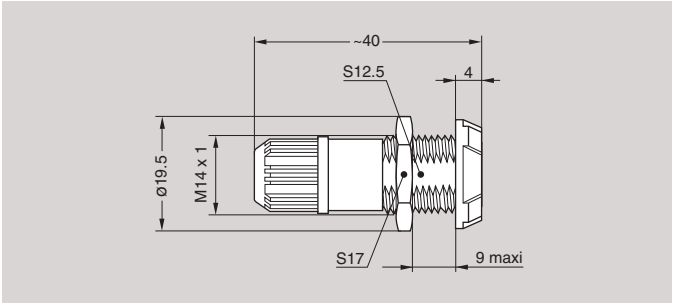

Part Number	Cable ø	
	min	max
PDG.M●.●GL.LC20G	1.7	2.0
PDG.M●.●GL.LC39G	2.7	3.9
PDG.M●.●GL.LC52G	4.0	5.2
PDG.M●.●GL.LC65G	5.3	6.5

Note: replace ●.● by contact configuration (see page 19).
Panel hole see page 24.

Note: all dimensions are in millimeters

Elbow socket models (IP50)

P . . .

PPG Elbow socket, key (G) or keys (A, B, C), for printed circuit

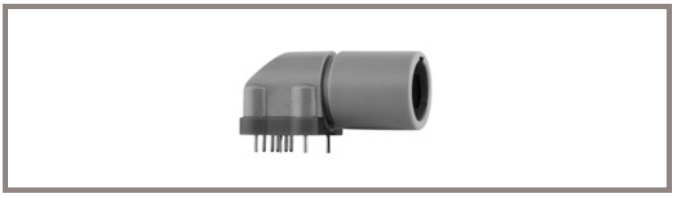

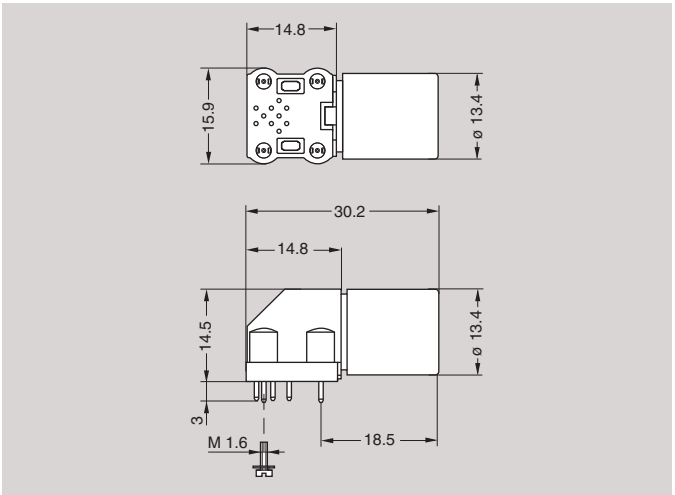

Part Number	number of contacts
PPG.M0.2GG.N	2
PPG.M0.4GG.N	4
PPG.M0.5GG.N	5
PPG.M0.6GG.N	6
PPG.M0.7GG.N	7
PPG.M0.8GG.N	8
PPG.M0.9GG.N	9
PPG.M1.0GG.N	10

Note: only available with G or A, B, C keying. The insulator is made of PSU.
Outershell material is grey or black PSU.
For PCB drilling, see page 25.
It is possible to replace the 4 ground pins by 4 screws (M1.6) add an «S» to the end of the part number. (e.g.: PPG.M0.2GG.NS)

PXG Elbow socket, key (G) or keys (A, B, C), with two nuts, for printed circuit

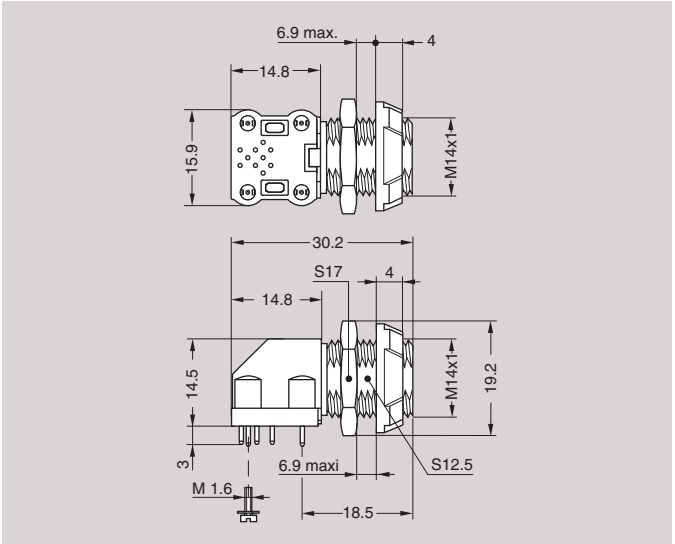

Part Number	number of contacts
PXG.M0.2GG.NG	2
PXG.M0.4GG.NG	4
PXG.M0.5GG.NG	5
PXG.M0.6GG.NG	6
PXG.M0.7GG.NG	7
PXG.M0.8GG.NG	8
PXG.M0.9GG.NG	9
PXG.M1.0GG.NG	10

Note: only available with G or A, B, C keying. The insulator is made of PSU.
Outershell material is grey or black PSU.
For PCB drilling, see page 25.
Panel hole see page 24.
It is possible to replace the 4 ground pins by 4 screws (M1.6) add an «S» to the end of the part number. (e.g.: PXG.M0.2GG.NGS)

Note: all dimensions are in millimeters.
For outershell in black PSU replace material code by «N».

Disposable plug (limited use)

P J . M . A A . A T 3 8 B

Fixed socket

1 Outershell
2 Latch sleeve
3 Male contact
4 Backshell

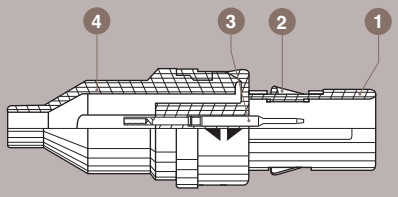

Characteristics	Value	Standards
Endurance for PJ● (latching)	5 cycles	IEC 60512-5 test 9a
Working temperature range (ABS)	-30/+90°C	–
Shell material	ABS	–

PJG Straight disposable plug

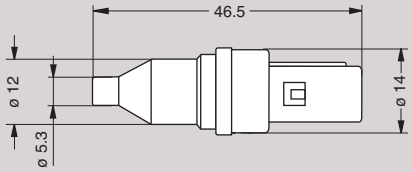

Part Number	nb. of cts.	Test Voltage (kV rms)	Recommanded Mating fixed socket part number
PJG.M0.9AA.AT38B	9	0.85	PKG.M0.9GL.LG
PJG.M1.0AA.AT38B	10	0.85	PKG.M1.0GL.LG
PJG.M1.4AA.AT38B	14	0.60	PKG.M1.4GL.LG

Note: only G, A, B, C keying available.
Only ABS plastic shell. White standard (B) or grey optional (G)
Cables up to 3.8mm diameter. Available only with male solder contacts.
Delivered in blister packs.

Disposable socket (limited use)

P Y . M . . .

Fixed socket

1 Outershell
2 Male contact

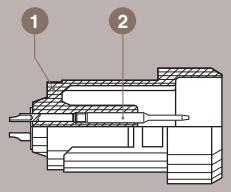

Characteristics	Value	Standards
Endurance for PY● (latching)	> 2000 cycles	IEC 60512-5 test 9a
Working temperature range (PSU)	-50/+150°C	–
Average latching force	6N	IEC 60512-7 test 13a
Average unmating force	7N	IEC 60512-7 test 13a
Average retention force	90N	IEC 60512-7 test 13a

PY● Fixed disposable socket, snap on fixing

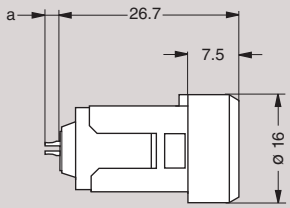

Part Number	nb. of cts.	Contact Type	Solder a max	Shell color	Recommanded Mating straight plug part number
PYG.M0.4GG.LG	4	female	2.5	grey	PAG.M0.4GL.AC•••
PYG.M0.4GG.LN	4	female	2.5	black	PAG.M0.4GL.AC•••
PYH.M0.8GG.AA	8	male	2.5	blue	PAH.M0.8GL.LC•••
PYH.M0.8GG.AB	8	male	2.5	white	PAH.M0.8GL.LC•••
PYA.M1.0GG.LG	10	female	4.0	grey	PAA.M1.0GL.AC•••
PYH.M1.0GG.AA	10	male	4.0	blue	PAH.M1.0GL.LC•••

Note:
The outershell and the insulator are moulded out of the same material (PSU).
Protective backshell available (see page 22).
Part number last digit represents the colour.

Note: all dimensions are in millimeters

Watertight models (IP64 when mated)

P | | . | | . | | | . | | | | | | |

Fixed socket

1 Outershell
2 Insulator
3 Female contact
4 Hexagonal nut
5 Flat gasket
6 Gasket
7 Nut

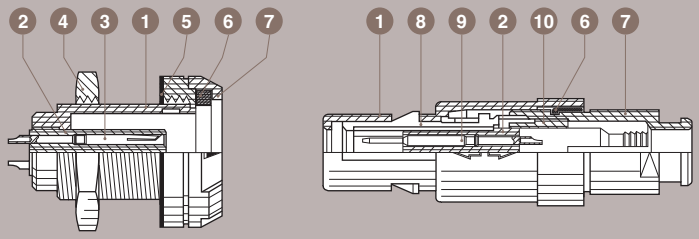

Straight plug

1 Outershell
2 Insulator
6 Gasket
7 Nut
8 Latch sleeve
9 Male contact
10 Cable collet

Characteristics	Value	Standards
Average retention force when pulling on the cable 1N = 0.102 kg	90 N	IEC 60512-8 test 15f
Cable retention force (depends on cable construction) 1N = 0.102 kg	50 - 150 N	IEC 60512-9 test 17c

Characteristics	Value	Standards
Endurance (latching)	> 2000 cycles	IEC 60512-5 test 9a
Working temperature range (PSU)	-50/+90°C	–
Gasket material	Elastomer SEBS	–

PFG Straight plug with cable collet and nut for fitting a bend relief

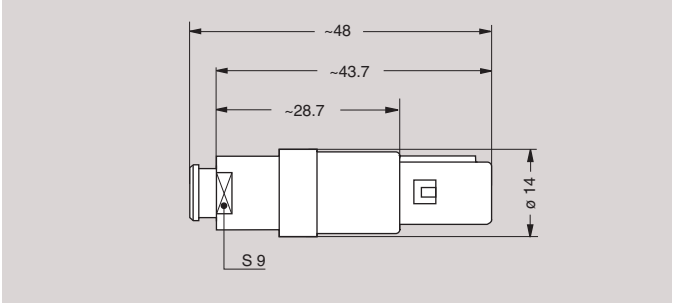

Part Number	Cable ø	
	min	max
PFG.M•.•GL.AC20GZ	1.7	2.0
PFG.M•.•GL.AC39GZ	2.7	3.9
PFG.M•.•GL.AC52GZ	4.0	5.2
PFG.M•.•GL.AC65GZ	5.3	6.5

Note: the bend relief must be ordered separately (see page 22).
Replace •.• by contact configuration (see page 19).

PNG Fixed socket, nut fixing

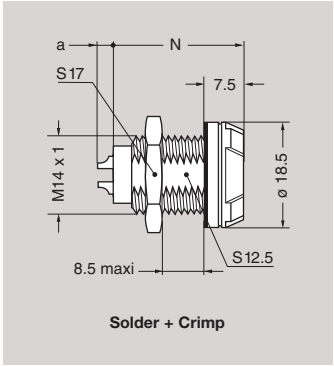

Solder + Crimp

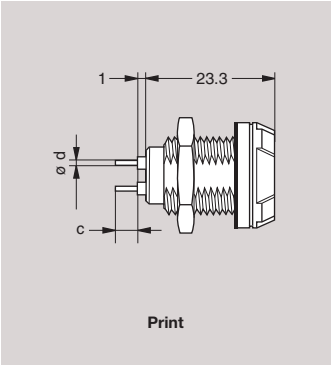

Print

Part Number	number of contacts	Contact					
		Solder		Crimp		Print	
		N	a max	N	a	c	ø d
PNG.M0.2GL.LG	2	23.3	2.5	25.0	0	5	0.7
PNG.M0.4GL.LG	4	23.3	2.5	25.0	0	5	0.7
PNG.M0.5GL.LG	5	23.3	2.5	25.0	0	5	0.7
PNG.M0.6GL.LG	6	23.3	2.5	25.0	0	3	0.5
PNG.M0.7GL.LG	7	23.3	4.5	25.0	0	3	0.5
PNG.M0.8GL.LG	8	23.3	4.5	25.0	0	3	0.5
PNG.M0.9GL.LG	9	23.3	3.9	–	–	3	0.5
PNG.M1.0GL.LG	10	23.3	3.9	–	–	3	0.5
PNG.M1.4GL.LG	14	23.3	3.9	–	–	3	0.5

Note: for PCB drilling pattern see page 24.

Note: all dimensions are in millimeters

PSG Free socket, conical outershell with cable collet and nut for fitting a bend relief

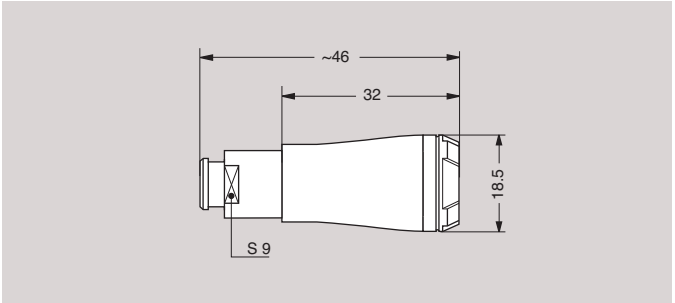

Note: all dimensions are in millimeters

Part Number	Cable ø	
	min	max
PSG.M•.•YL.LC52NZ	4.0	5.2
PSG.M•.•YL.MC65RZ	5.3	6.5
PSG.M•.•YL.MC65AZ	5.3	6.5
PSG.M•.•YL.LC52NZ	4.0	5.2

Note: replace •.• by contact configuration (see page 19).
Outershell in black Delrin®
The bend relief must be ordered separately (see page 22).

Fluidic configuration (2 bars)

P . A 0 . 1 G Z .

The REDEL fluidic connector has many applications for example in medical or dentistry equipment. The connector is a monotube type and primarily intended for use with air or inert gas.

Fixed socket

1 Outershell
2 Fluidic tube
3 Front nut
4 Hexagonal nut

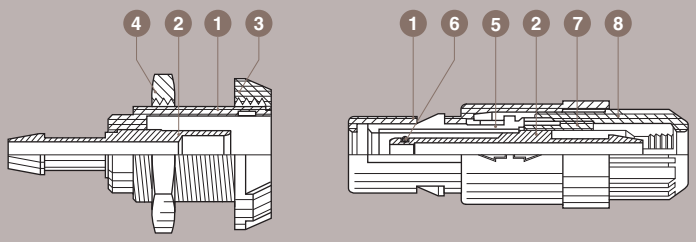

Straight plug

1 Outershell
2 Fluidic tube
5 Latch sleeve
6 O-ring
7 Cable collet
8 Backnut

Characteristics	Value	Standards
Max. working pressure	2 bars	–
Endurance (latching)	> 2000 cycles	IEC 60512-5 test 9a
Working temperature range (PSU)	-20/+150°C	–

Characteristics	Value	Standards
Inner fluidic contact diameter	2.6 mm	–
Tube diameter inner/outer	4 mm / 6 mm	–
Fluidic tube material	Ni plated brass	–
O-ring material	FPM (Viton®)	–

PAG Straight plug, key (G) or keys (A, B, C, H and J), with cable collet

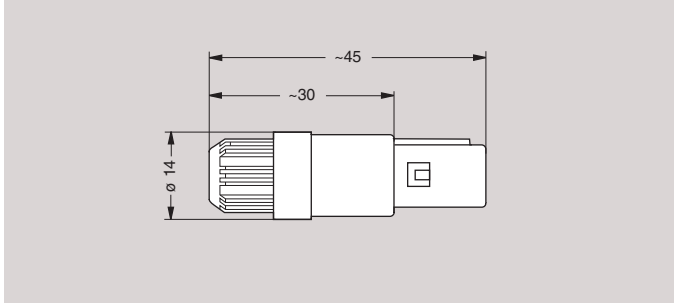

Part Number	ø max. tube (mm)	ø inner tube (mm)
PAG.A0.1GZ.ZC65G	6.5	4

Note: For collet nut colour replace last digit (see table page 20).

PAG Straight plug, key (G) or keys (A, B, C, H and J), with cable collet and nut for fitting a bend relief

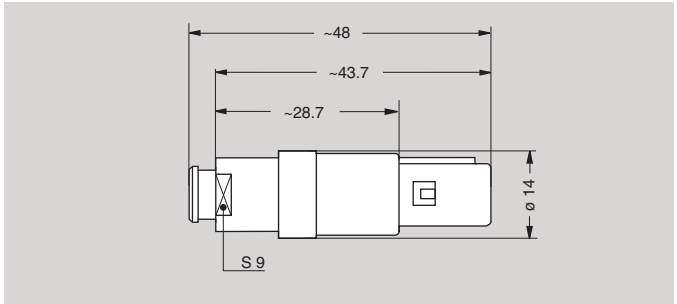

Part Number	ø max. tube (mm)	ø inner tube (mm)
PAG.A0.1GZ.ZC65GZ	6.5	4

The bend relief must be ordered separately (see page 22).

Note: all dimensions are in millimeters

PLG Fixed socket, key (G) or keys (A, B, C, H and J), with fluidic contact, nut fixing

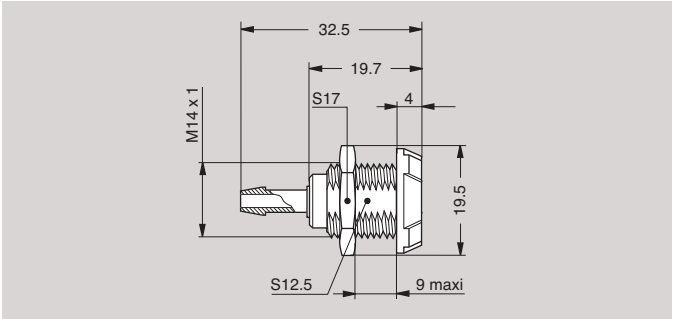

Part Number	ø inner tube (mm)
PLG.A0.1GZ.ZG	4

Note: For front nut colour replace last digit (see table page 20).
Recommended tube Legris 102540601

PKG Fixed socket, key (G) or keys (A, B, C, H and J), with fluidic contact, with two nuts (back panel mounting)

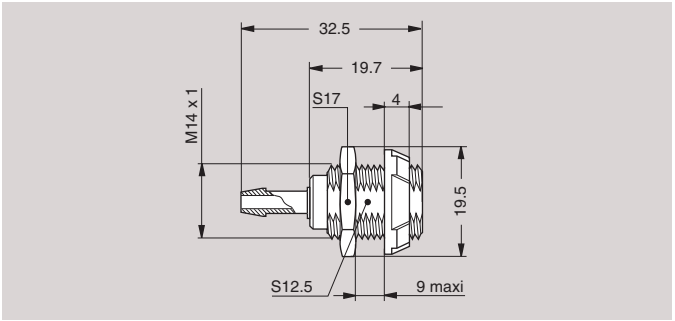

Part Number	ø inner tube (mm)
PKG.A0.1GZ.ZG	4

Note: For front nut colour replace last digit (see table page 20).
Recommended tube Legris 102540601

Note: all dimensions are in millimeters

Mains power configuration

P . . .

The new PAH and PKH models are used for mains power in medical applications. The design of a special insulator offers the required creepage distance. The 3 contacts are only solder type with a maximum AWG 18 (wire size max 1.35 mm). The connectors are UL certified to be used at 250 Volt AC (9 Amps). See UL approval file number N°E242949.

Fixed socket

1 Outershell
2 male contact
3 Front nut
4 Hexagonal nut

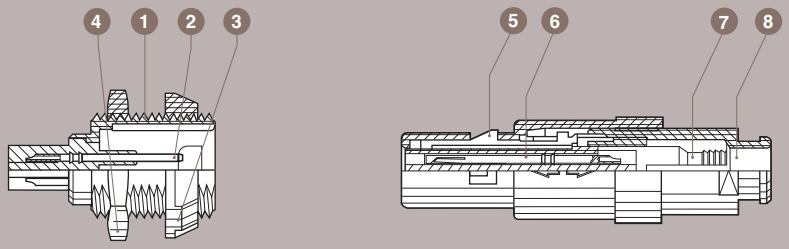

Straight plug

5 Latch sleeve
6 Female contact
7 Cable collet
8 Backnut

Characteristics	Value	Standards
Test voltage (rms)	1.5 kV	IEC 60512-2 test 4a
Rated voltage (rms)	250 V	IEC 60601/UL 60601-1
Average retention force when pulling on the cable 1N = 0.102 kg	90 N	IEC 60512-8 test 15f

Characteristics	Value	Standards
Cable retention force (depends on cable construction) 1N = 0.102 kg	50 – 150 N	IEC 60512-9 test 17c
Endurance (latching)	> 2000 cycles	IEC 60512-5 test 9a
Working temperature range (PSU)	-50/+150°C	–
UL file number	E242949	–

PAH Straight plug, key (H), with cable collet and nut for fitting a bend relief

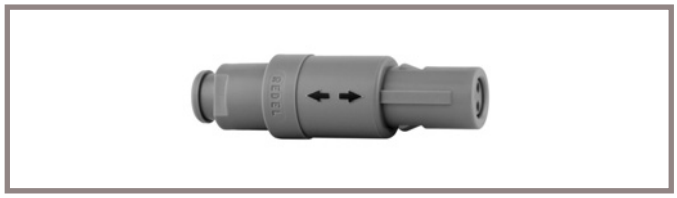

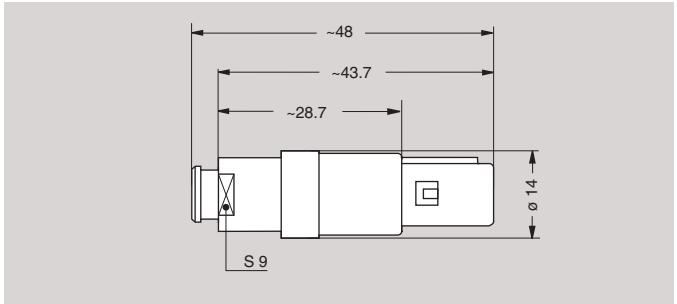

Part Number	Cable ø	
	min	max
PAH.N0.3GL.LC52GZ	4.0	5.2
PAH.N0.3GL.LC65GZ	5.3	6.5
PAH.N0.4GL.LC52GZ	4.0	5.2
PAH.N0.4GL.LC65GZ	5.3	6.5

Note: The bend relief must be ordered separately (see page 22).

PKH Fixed socket, key (H), with two nuts (back panel mounting)

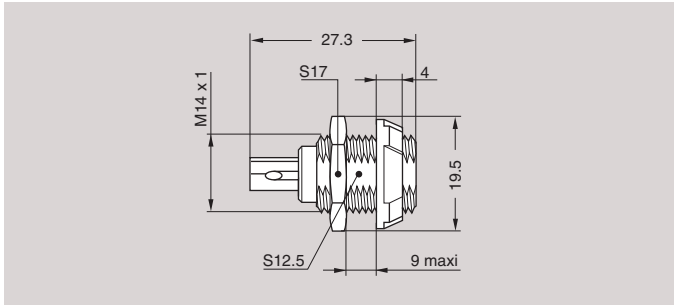

Part Number
PKH.N0.3GL.AG
PKH.N0.4GL.AG

Note: For front nut colour replace last digit (see table page 20).
Not available with print contact.

Note: all dimensions are in millimeters

Insert configuration

P | | . | | . | | . | | | | | | |

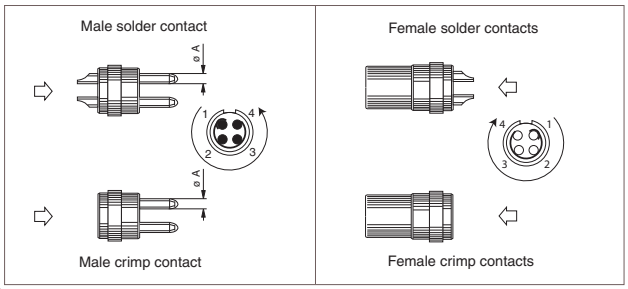

	Reference	Number of contacts	Contact ø (mm)	Solder bucket ø (mm)[5]	Crimp bucket ø (mm)[5]	Contact type: Solder	Contact type: Crimp	Contact type: Print (straight)	Contact type: Print (elbow)	Test voltage (kV rms)[1] Contact-contact	Air clearance min[2] (mm) Creepage distance min[3] (mm)	Rated current (A)
Multipole	M0.2	2	1.3	1.10	1.4	●	●	●	●	1.20	1.30	10.0
	M0.4	4	0.9	0.80	1.1	●	●	●	●	1.20	1.20	8.0
	M0.5	5	0.9	0.80	1.1	●	●	●	●	1.05	0.80	7.0
	M0.6	6	0.7	0.60	0.8	●	●	●	●	1.05	0.85	6.0
	M0.7	7	0.7	0.60	0.8	●	●	●	●	1.05	0.85	5.0
	M0.8	8	0.7	0.60	0.8	●	●	●	●	1.05	0.60	5.0
	M0.9	9	0.5	0.45	-	●	-	●	●	0.85	0.60	3.0
	M1.0	10	0.5	0.45	-	●	-	●	●	0.85	0.45	3.0[4]
	M1.4	14	0.5	0.45	-	●	-	●	●	0.60	0.50	2.0
Mains power	N0.3[6]	3	0.9	1.40	-	●	-	-	-	1.50	2.00 6.00	9.0[6]
	N0.4	4	0.9	1.40	-	●	-	-	-	2.50	1.30 3.50	8.0
Fluidic	A0.1	1 Fluidic (monotube) up to 2 bars										

Note: 1) depending on specific application and related standard, more restrictive operating voltage may apply.
We suggest operating voltage = 1/3 test voltage, see page 68.
2) shortest distance in air between two conductive parts.
3) shortest distance along the surface of the insulating material between two conductive parts.
4) for PPG and PXG (with 10 contacts) electrical characteristics, please contact factory.
5) for a given AWG, the diameter of some stranded conductor design is larger than the solder cup diameter (see page 69).
6) UL file number: E242949

Alignment key

Verify the third digit of the part number in order to select the right keying.
The standard keying is «G» coded.

Keying (plug front view)	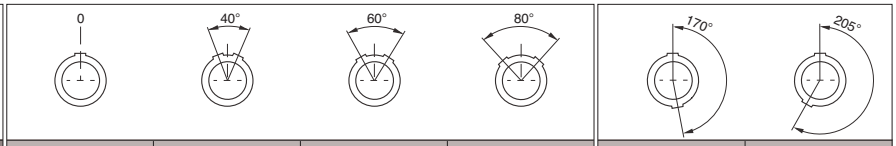					
Reference	G	A	B	C	H	J
Contact type for plug	male	male	male	male	female	female
Contact type for socket	female	female	female	female	male	male
Number of contacts	2 to 14				8, 10 or 14	

Outer shell material

Material	Ref.	Colour	Temperature
PEI	S	Grey	-50° / +170°C
PEI	T	Black	
PSU	G	Grey	-50° / +150°C
PSU	N	Black	

Note: for extensive sterilization use PEI. For complete connector in PEI (collet nut, front nut or flange also in PEI), available colours are grey or black only.
Use colour coding grey or black according to colour coding table (see below)

Contact type

Select the type of contact: solder or crimp?

Plug

Type	Male	Female
solder	A	L[1)]
crimp	C	-

Socket

Type	Male	Female
solder	A[1)]	L
crimp	-	M
print	D	N
print 90°	V	V

Note: 1) only for H and J keying with 8, 10 or 14 contacts
For complete connector in PEI (collet nut, front nut or flange also in PEI), available colours are grey or black only. Use colour coding grey or black according to colour coding table (see below)

When should I use crimp rather than solder contacts ?

Soldering

- recommended for small volumes
- requires little amount of tooling (soldering iron)
- requires more time

Crimping

- recommended for large volumes
- no heat is required to make the connection
- for contacts with high density
- for use in high temperature environment
- requires extra tooling (crimping tools)

Colour coding

	Colours						
	grey	blue	yellow	black	red	green	white
Reference	G	A	J	N	R	V	B
RAL code	7001	5002	1016	9005	3020	6024	9003

Note: the RAL colours are indicative and depend on raw material and production process. Colour may differ.

Easy identification with the assistance of colour coding.
Outershell is only available in grey or black.

Accessories

PAG-PLG Insulator for crimp contacts

male / white marking

female / red marking

Contact configuration	Insulator part number	
	For male contact	For female contact
M0.2	PAG.302.YL	PLG.402.YL
M0.4	PAG.304.YL	PLG.404.YL
M0.5	PAG.305.YL	PLG.405.YL
M0.6	PAG.306.YL	PLG.406.YL
M0.7	PAG.307.YL	PLG.407.YL
M0.8	PAG.308.YL	PLG.408.YL

PAG-PKG Crimp contacts, kit with the number of contacts in a tube

Contact configuration	nb. of contacts	ø contact (mm)	Kit contact part number	
			Male	Female
M0.2	2	1.3	PAG.567.02C	PKG.667.02M
M0.4	4	0.9	PAG.562.04C	PKG.662.04M
M0.5	5	0.9	PAG.562.05C	PKG.662.05M
M0.6	6	0.7	PAG.557.06C	PKG.657.06M
M0.7	7	0.7	PAG.557.07C	PKG.657.07M
M0.8	8	0.7	PAG.557.08C	PKG.657.08M

Note: upon request, contacts with reduced crimp barrel are available.

PLA Collet

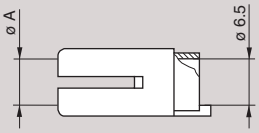

Part Number	ø A (mm)	Cable ø (mm)	
		min.	max.
PLA.720.••	2.0	1.7	2.0
PLA.739.••	3.9	2.7	3.9
PLA.752.••	5.2	4.0	5.2
PLA.765.••	6.5	5.3	6.5

Note: •• = UG (grey PSU), TN (black PEI) or UN (black PSU).

PKG Plastic front nut for PK● and PT● models

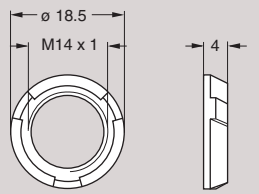

Part Number	Mat.	Colours
PKG.220.UA	PSU	blue
PKG.220.UB	PSU	white
PKG.220.UG	PSU	grey
PKG.220.UJ	PSU	yellow
PKG.220.UN	PSU	black
PKG.220.UR	PSU	red
PKG.220.UV	PSU	green
PKG.220.TG	PEI	grey
PKG.220.TN	PEI	black

PAM.130.●● Nut for fitting a GMA.1B bend relief

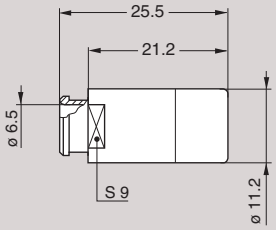

Note: all dimensions are in millimeters

Part Number	Mat.	Colours
PAM.130.UA	PSU	blue
PAM.130.UB	PSU	white
PAM.130.UG	PSU	grey
PAM.130.UJ	PSU	yellow
PAM.130.UN	PSU	black
PAM.130.UR	PSU	red
PAM.130.UV	PSU	green
PAM.130.TN	PEI	black
PAM.130.TG	PEI	grey

Note: only for PA•, PR• or PT• models.

PYG.02 Protective backshell for PY●

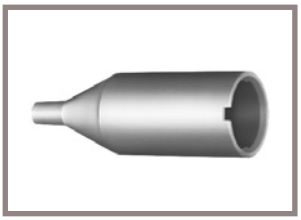

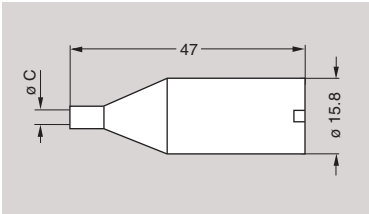

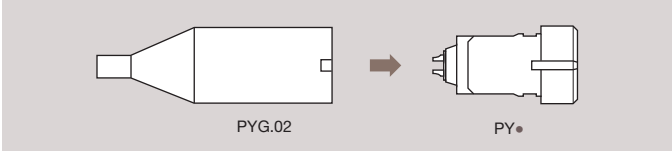

Part Number	ø C (mm)	Mat.	Colours
PYG.02.5UG.0	2.5	PSU	grey
PYG.02.5YG.0ABS	2.5	ABS	grey
PYG.02.7YG.0ABS	2.7	ABS	grey
PYG.02.5YG.0PSU	2.5	PSU	grey

Note: ABS working temperature: -30°C +90°C.
All dimensions are in millimeters.

GMA.1B Bend relief

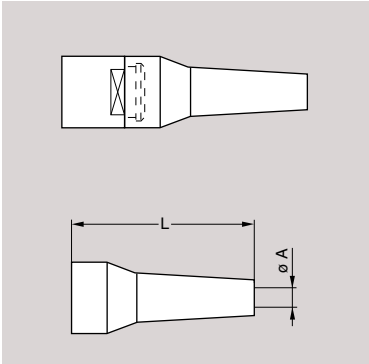

A bend relief absorbs the force that may be exerted on cables.
These are designed for plugs and free sockets with cable collet and nut.

Part Number	Dimensions (mm)				Material	Temperature range	
	Bend relief		Cable ø			in dry atmosphere	in water steam
	A	L	max.	min.			
GMA.1B.025.DG	2.5	30	2.9	2.5	TPU (Thermoplastic Polyurethane)	-40°C, +80°C	–
GMA.1B.030.DG	3.0	30	3.4	3.0			
GMA.1B.035.DG	3.5	30	3.9	3.5			
GMA.1B.040.DG	4.0	30	4.4	4.0			
GMA.1B.045.DG	4.5	30	4.9	4.5			
GMA.1B.054.DG	5.4	30	6.0	5.4			
GMA.1B.065.DG	6.5	30	7.0	6.5			
GMA.1B.025.RG	2.5	34	2.9	2.5	Silicone elastomer VMQ	-60°C, +200°C	+140°C
GMA.1B.030.RG	3.0	34	3.4	3.0			
GMA.1B.035.RG	3.5	34	3.9	3.5			
GMA.1B.040.RG	4.0	34	4.4	4.0			
GMA.1B.045.RG	4.5	34	5.0	4.5			
GMA.1B.051.RG	5.1	34	5.6	5.1			
GMA.1B.057.RG	5.7	34	6.2	5.7			
GMA.1B.063.RG	6.3	34	7.0	6.3			

Note: the last letter «G» of the part number indicates a grey colour, see the adjacent table and replace letter «G» by the letter of the colour required.

Note: all dimensions are in millimeters

Reference	Colours
A	blue
B	white
G	grey
J	yellow
M	brown
N	black
R	red
S	orange
V	green

Note: the selection of pigments, which should remain stable at high temperature, is limited by the new regulations. For this reason, some colours will be a shade different from those used for TPU bend reliefs. The selected solutions represent the best possible compromise.

Tooling

POP.125.GN Spanner for outershell

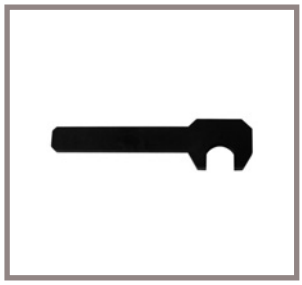

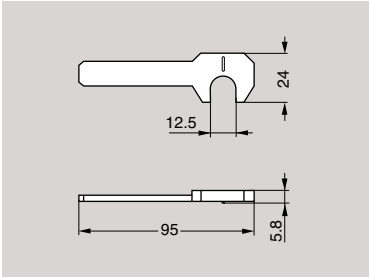

Note: both spanners available as a kit, ref. POZ.12.18G.N.
Material: PA 6.6

POB.186.GN Spanner for front nut

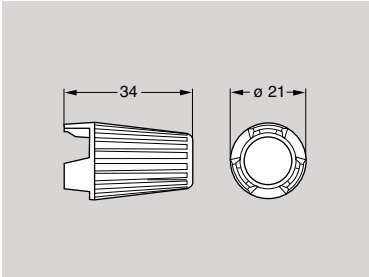

Material: PA 6.6

DPC.91.701.V Crimping tool

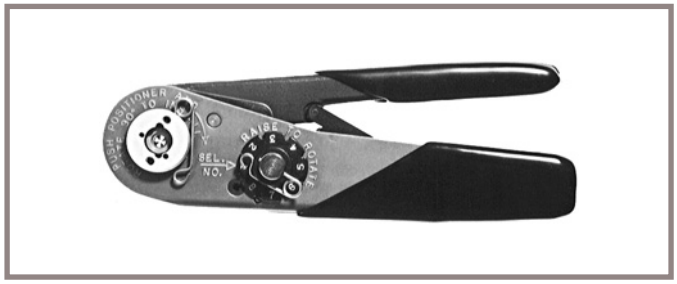

DCE Positioners for crimp contacts

male

female

DCF Automatic extraction tools for crimp contacts

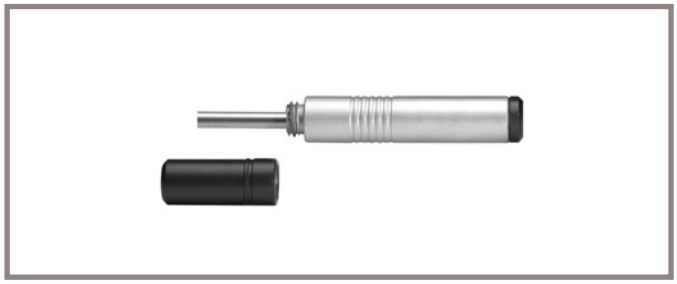

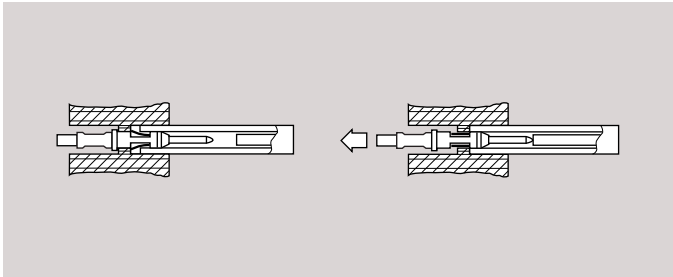

Configuration	Contact ø (mm)	Conductor AWG	Positioner part number		Selector No Setting	Part number extractor	
			Male contact	Female contact		Male contact	Female contact
M0.2	1.3	18-20	DCE.91.135.BVD	DCE.91.130.BVM	8-7	DCF.91.133.5LT	DCF.91.131.2LT
M0.4/M0.5	0.9	20-22-24	DCE.91.095.BVD	DCE.91.090.BVM	6-5-5	DCF.91.093.5LT	DCF.91.090.2LT
M0.6/M0.7/M0.8	0.7	22-24-26	DCE.91.075.BVD	DCE.91.070.BVM	6-5-5	DCF.91.073.5LT	DCF.91.070.2LT

Note: the variance in conductor stranding diameter for the minimum AWG is such that some can have a cross section which is not sufficient to guarantee crimping as per IEC 60352-2 standard. All dimensions are in millimeters.

DCK Retention testing tools for crimp contacts

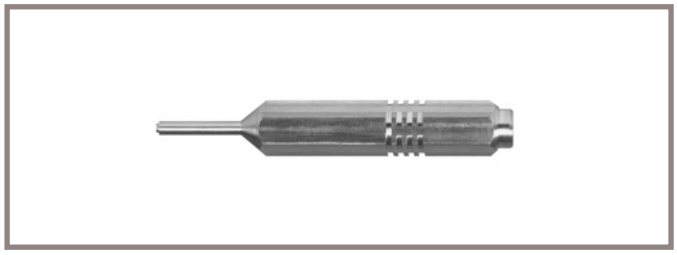

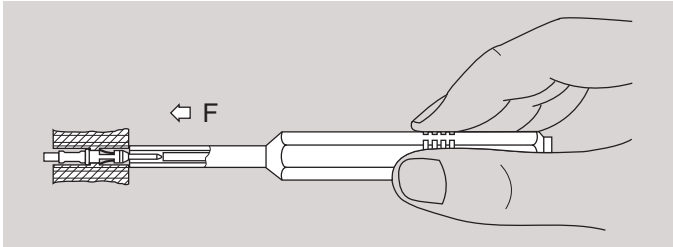

Contact ø (mm)	Test force (N)	Testing tool part number	
		Male contact	Female contact
0.7	10	DCK.91.071.0LRC	DCK.91.071.0LRM
0.9	14	DCK.91.091.4LRC	DCK.91.091.4LRM
1.3	25	DCK.91.132.5LRC	DCK.91.132.5LRM

Note: all dimensions are in millimeters

Panel hole

For PL●, PK●, PN●, PX●, PT● and PD●

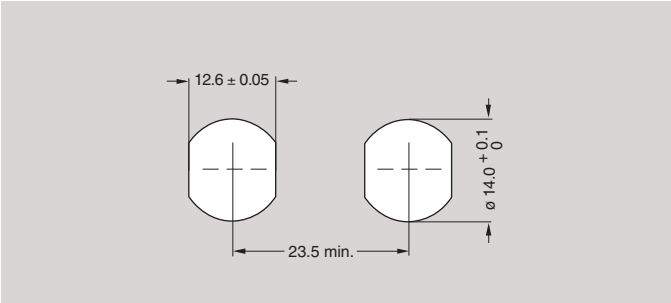

For PM●

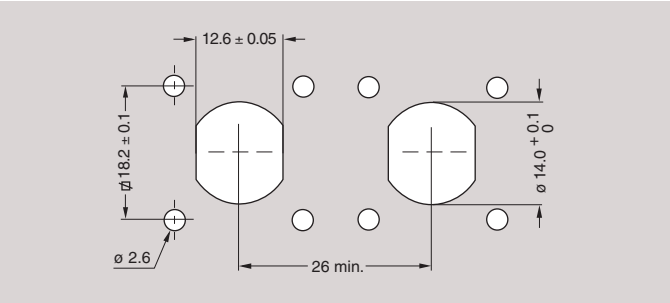

Note: PY• is also designed for snap-on fixing into customer housing. Consult factory for information.
– Socket mounting nut torque = 1.5 Nm.

PCB drilling pattern

For straight contacts

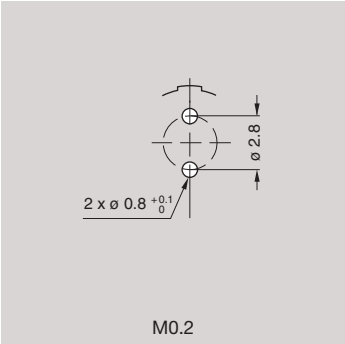

M0.2

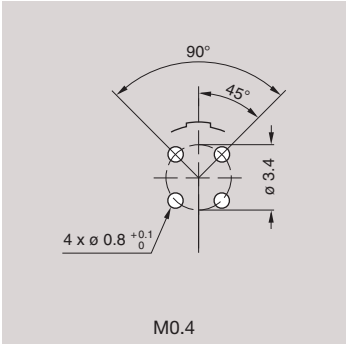

M0.4

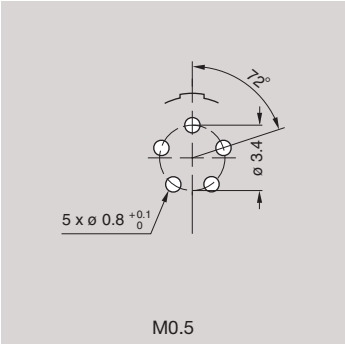

M0.5

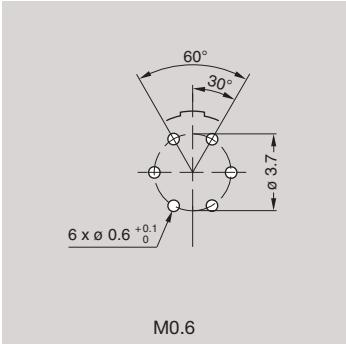

M0.6

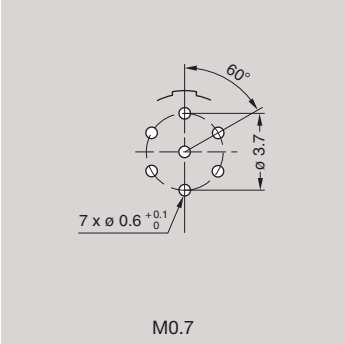

M0.7

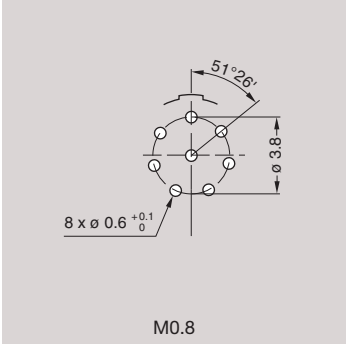

M0.8

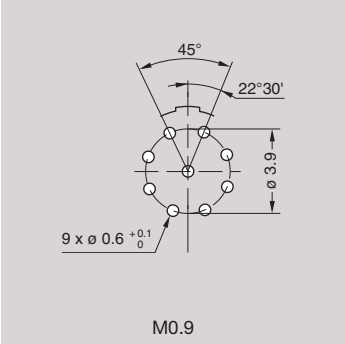

M0.9

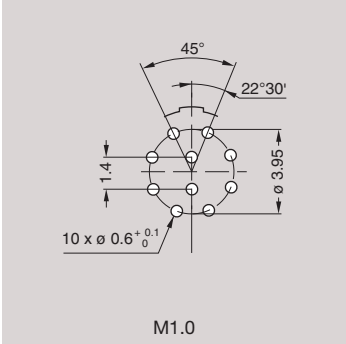

M1.0

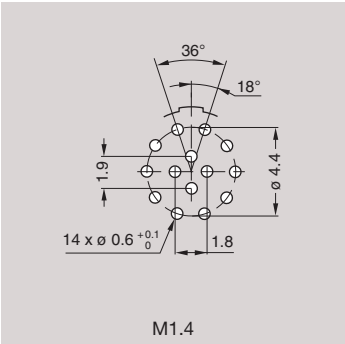

M1.4

Note: all dimensions are in millimeters

For 90° elbow contacts (A-A view)

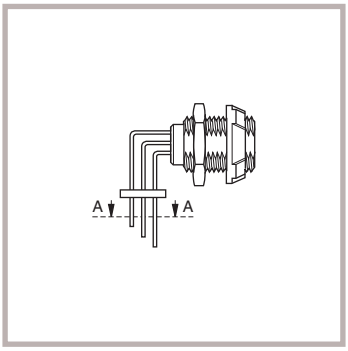

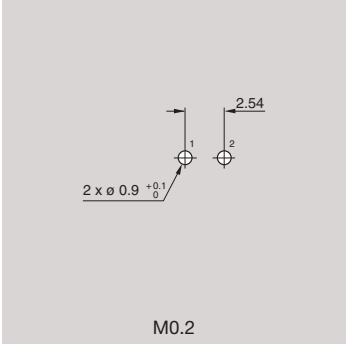

M0.2

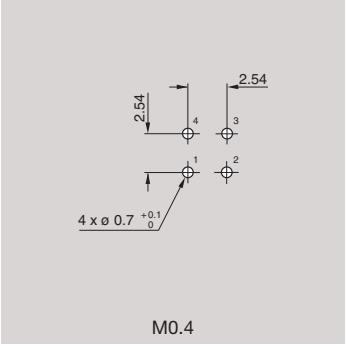

M0.4

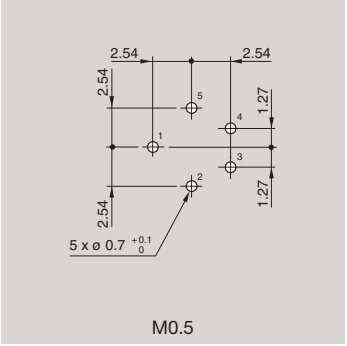

M0.5

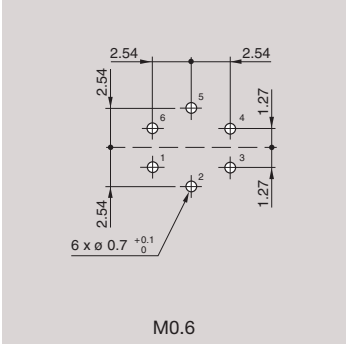

M0.6

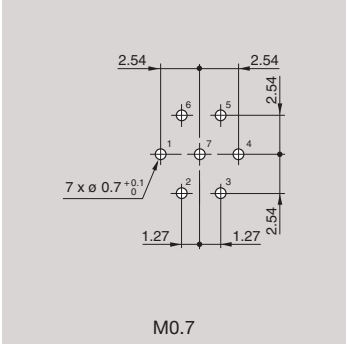

M0.7

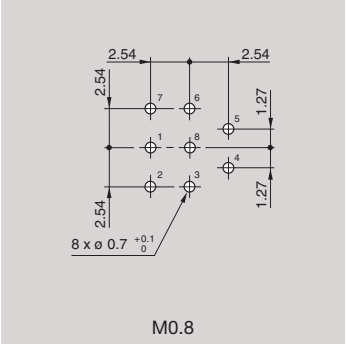

M0.8

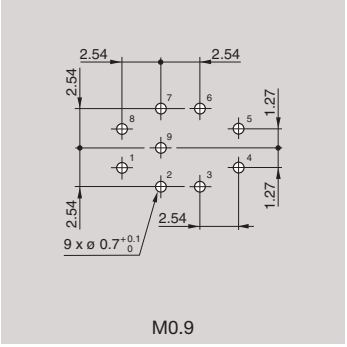

M0.9

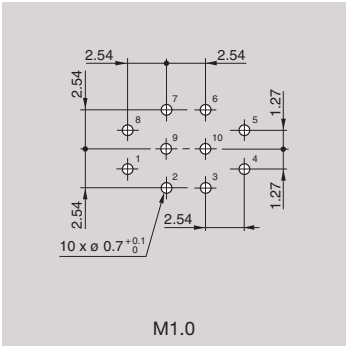

M1.0

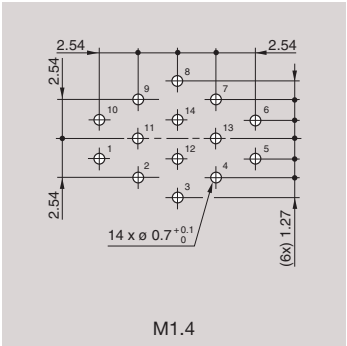

M1.4

For PPG and PXG models

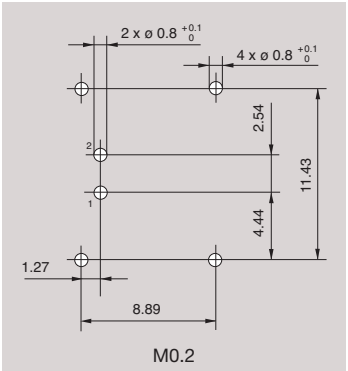

M0.2

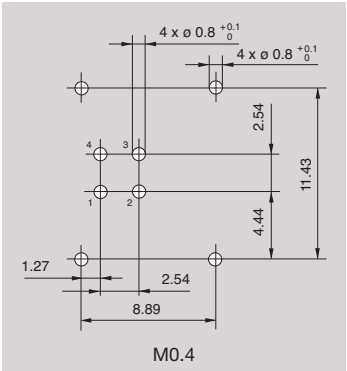

M0.4

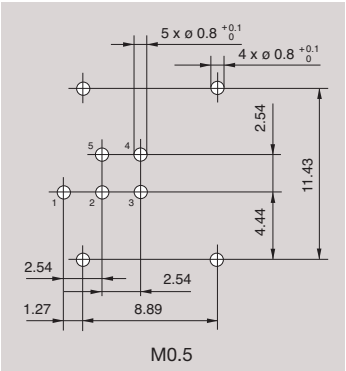

M0.5

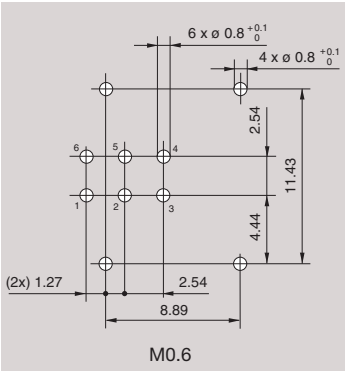

M0.6

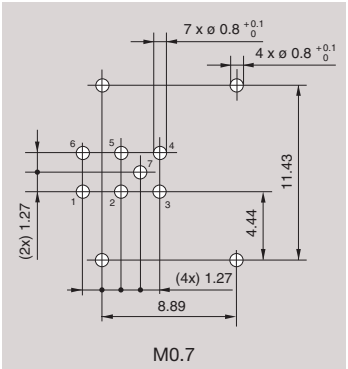

M0.7

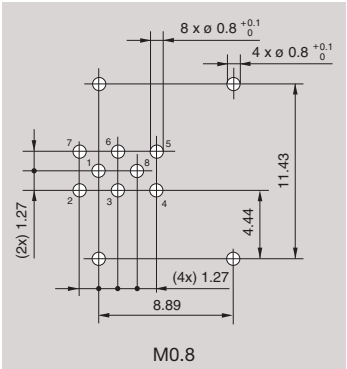

M0.8

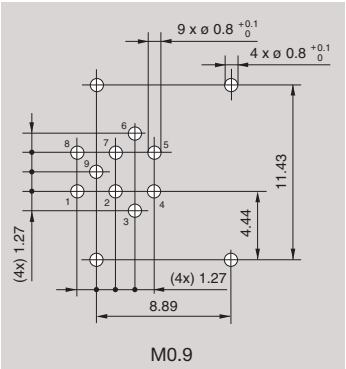

M0.9

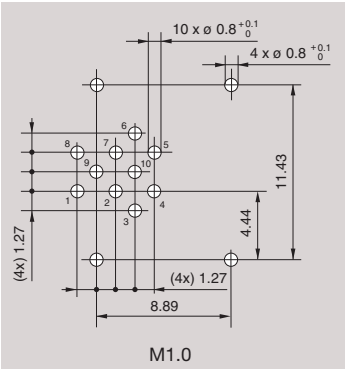

M1.0

Assembly instructions

Solder contacts

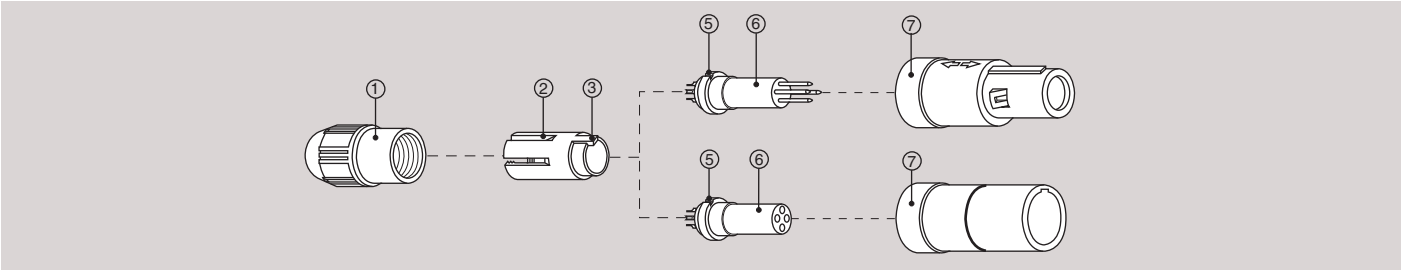

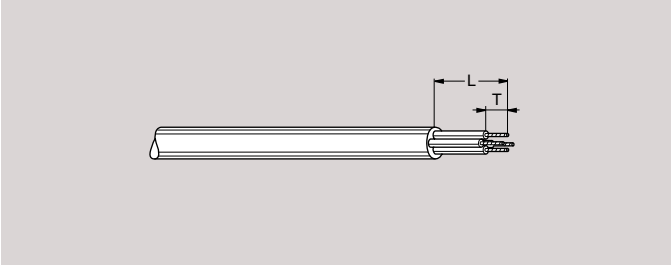

1. Strip the cable according to the lengths given in the table. Tin the conductors.

Configuration	Dimensions (mm)	
	L	T
M0.2	14.0	4.0
M0.4, M0.5	13.0	3.0
M0.6 to M1.4	12.5	2.5
N0.3	11.5	3.5
N0.4	11.5	3.5

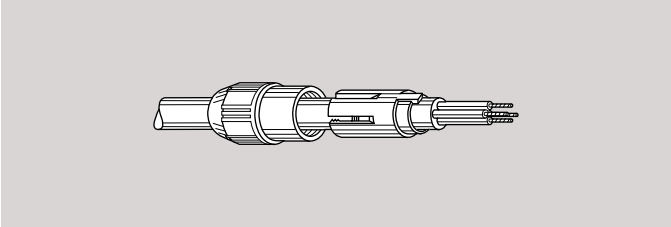

2. Slide the collet nut ① and then the collet ② onto the cable.

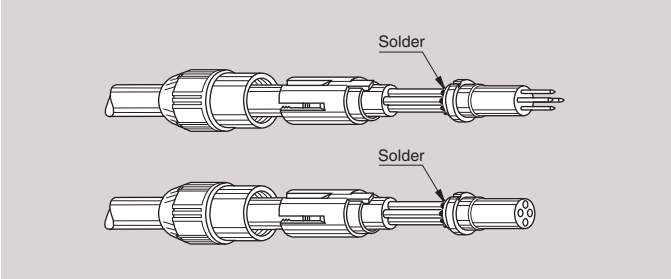

3. Solder conductors into contacts, making sure that neither solder nor flux gets onto the insulator or cable insulation.

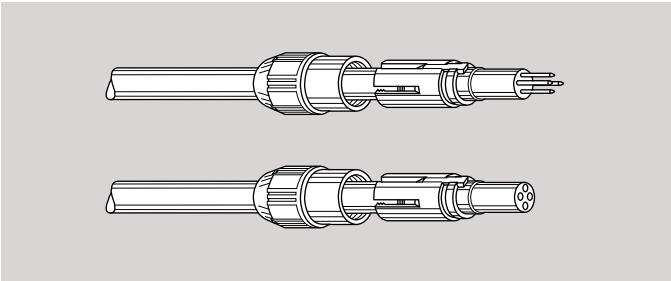

4. Slide the collet ② forward and locate tag ③ in the slot ⑤ on the insulator ⑥.
   Slide collet nut ① over collet ② and then push the whole assembly into the shell ⑦ whilst turning it to ensure that the tag ③ locates in the inside slot of the shell. Tighten the collet nut ① to the maximum torque of 0.25 Nm.

   – Socket mounting nut torque = 1.5 Nm.

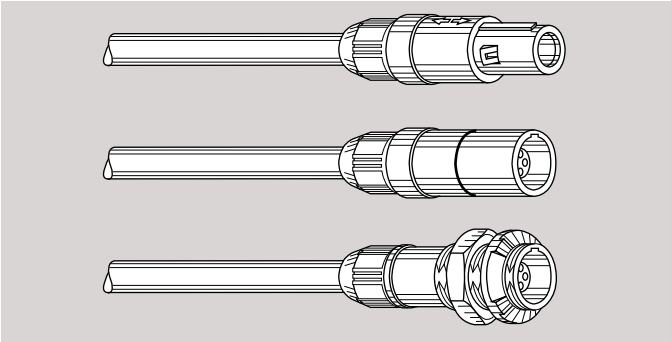

For PSU only:
We recommend ONLY the use of VTVC-6 Clear Vibra-tite or ThreeBond 1401 to secure the connector backnut. The use of other materials could result in damage to the connector.
The only recommended chemical cleaner is Isopropyl Alcohol.

Crimp contacts

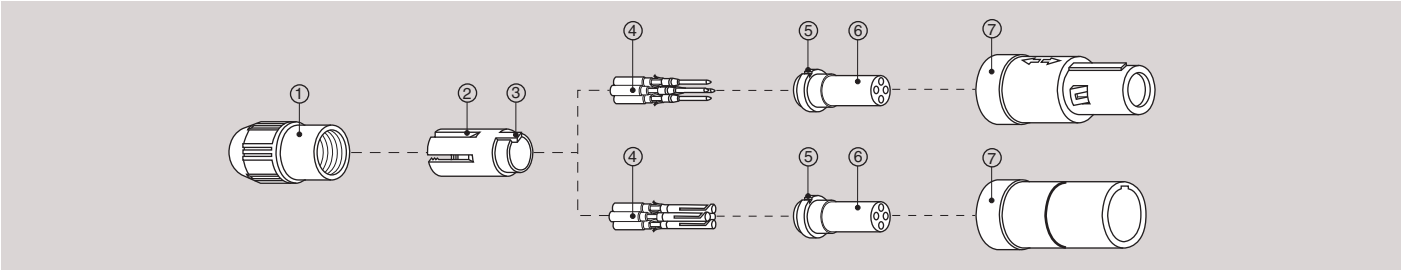

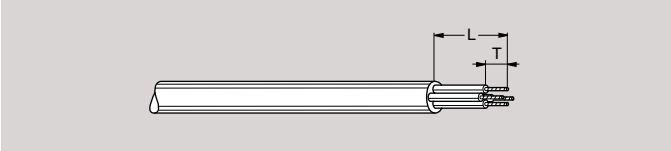

1. Strip the cable according to the lengths given in the table.

Configuration	Dimensions (mm)	
	L	T
M0.2 to M0.8	15.0	3.9

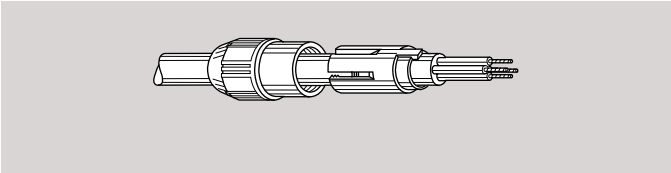

2. Slide the collet nut ① and then the collet ② onto the cable.

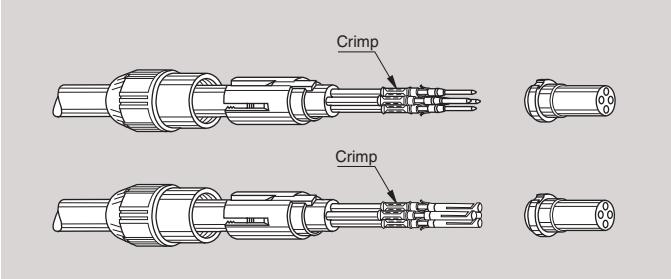

3. Fix the appropriate positioner (table page 23) in the crimping tool. Set selector to the number corresponding to the conductor AWG as indicated on the positioner label. Fit conductor into contact ④ and make sure it is visible through the inspection hole in the crimp barrel. Slide conductor-contact combination into the open crimping tool; make sure that the contact is fully pushed into the positioner. Close the tool. Remove from crimping tool and check that conductor is secure in contact and shows in inspection hole.

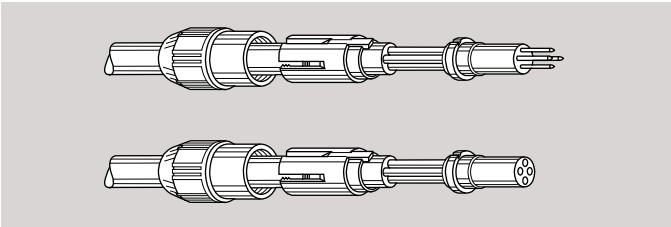

4. Now arrange contact-conductor combinations according to the insert marking and locate them into the insert ⑥. Check that all contacts are correctly located and remain in position when given a gentle pull.

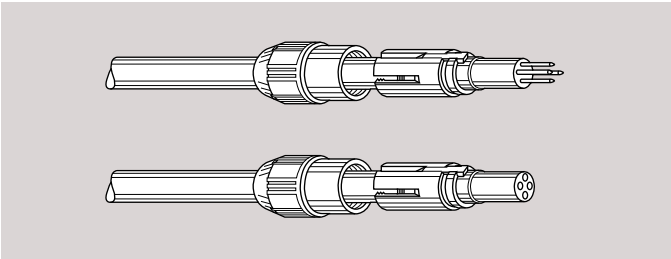

5. Slide the collet ② forward and locate tag ③ in the slot ⑤ on the insulator ⑥. Slide collet nut ① over collet ② and then push the whole assembly into the shell ⑦ whilst turning it to ensure that the tag ③ locates in the inside slot of the shell. Tighten the collet nut ① to the maximum torque of 0.25 Nm.

   – Socket mounting nut torque = 1.5 Nm.

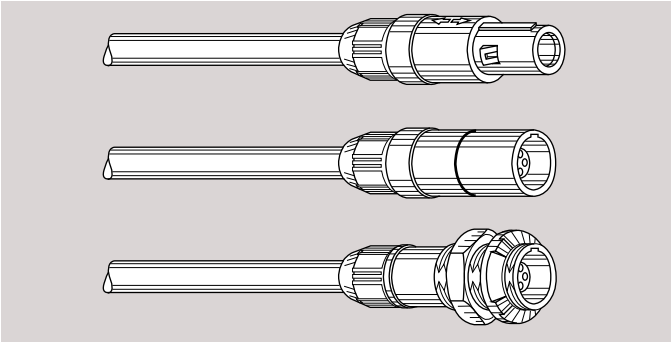

For PSU only:
We recommend ONLY the use of VTVC-6 Clear Vibra-tite or ThreeBond 1401 to secure the connector backnut. The use of other materials could result in damage to the connector.
The only recommended chemical cleaner is Isopropyl Alcohol.

Stamped contacts (For PJ●)

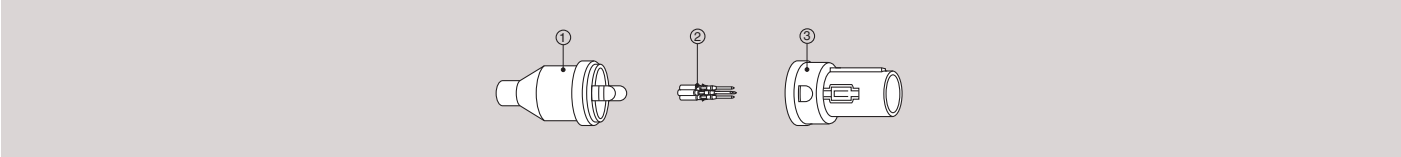

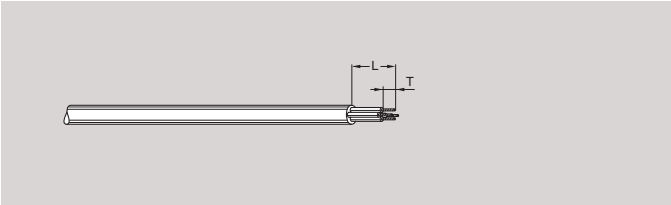

1. Strip the cable according to the lengths given in the drawing. Tin the conductors.

Configuration	Dimensions (mm)	
	L	T
M0.9, M1.0, M1.4	15.0	3.0

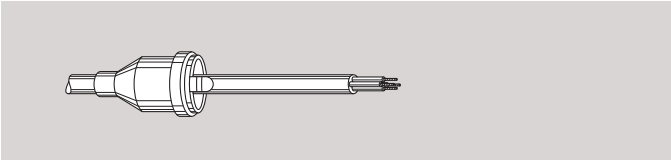

2. Slide the backshell ① onto the cable

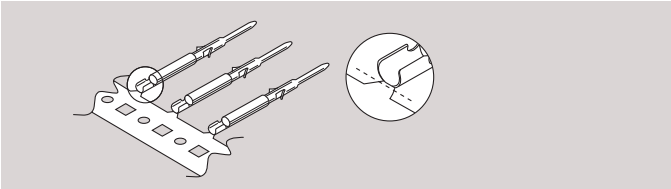

3. Contact removal
   Automated removal: if using automated equipment to remove the contacts ②, cut as near to the curled portion of the contact to minimize the size of the remaining attachment tab.

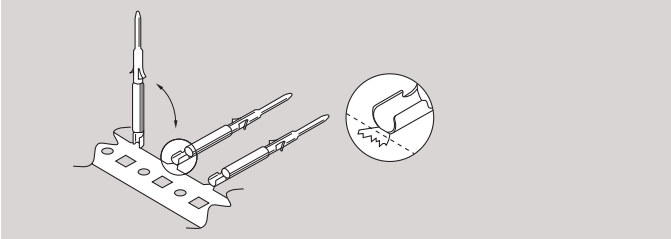

Manual removal
Gently remove each of the individual contacts ② by breaking in both directions as shown. If any portion of the attachment tab remains on the contact ②, clip off to minimize risk of shorting.

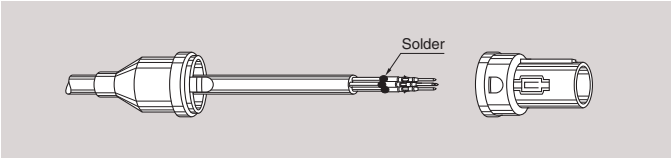

4. Solder conductors into contacts ②, making sure that neither solder nor flux gets onto the cable insulation.

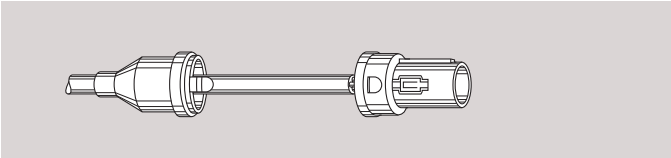

5. Arrange the contact-conductor combinations according to the marking on the plug ③ and locate them into the plug by gently pushing the contact-conductor into the proper hole until fully seated. Check that all contacts ② are correctly located and remain in position when given a gentle pull.

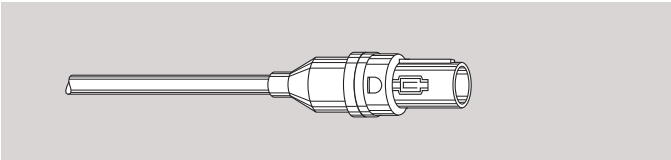

6. Slide backshell ① forward and align the tabs to the slots on the plug ③. Snap backshell onto the plug to complete the assembly. Various strain relief techniques can be incorporated, depending on application.

7. If the need arises to remove an installed contact, during the assembly process or subsequent repair, individual contacts can be removed using LEMO extraction tool (part number: DCF.91.050.2LT). DO NOT reuse extracted contacts.
   The only recommended chemical cleaner is Isopropyl Alcohol.

Exploded view of the REDEL 2P

Straight plug

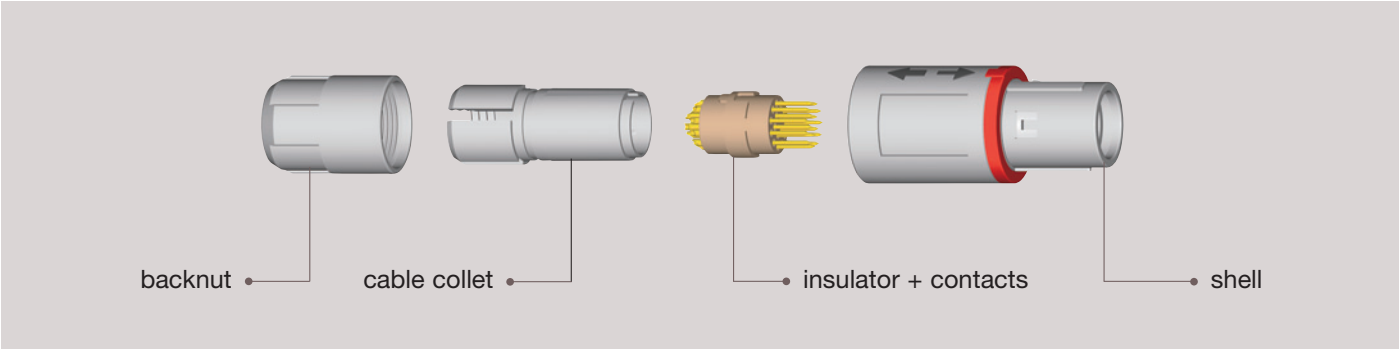

Straight plug with bend relief

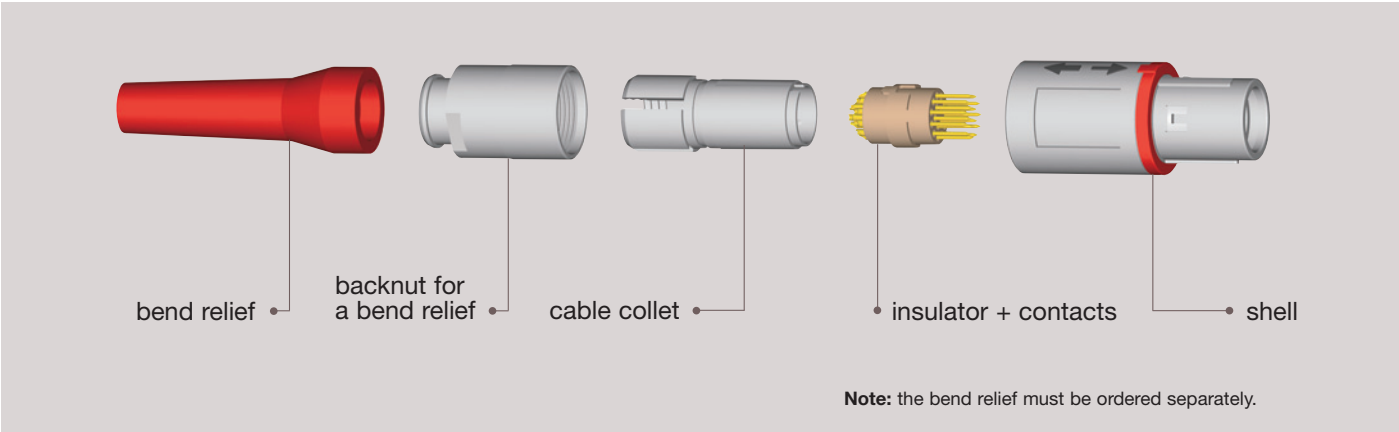

Note: the bend relief must be ordered separately.

Fixed socket

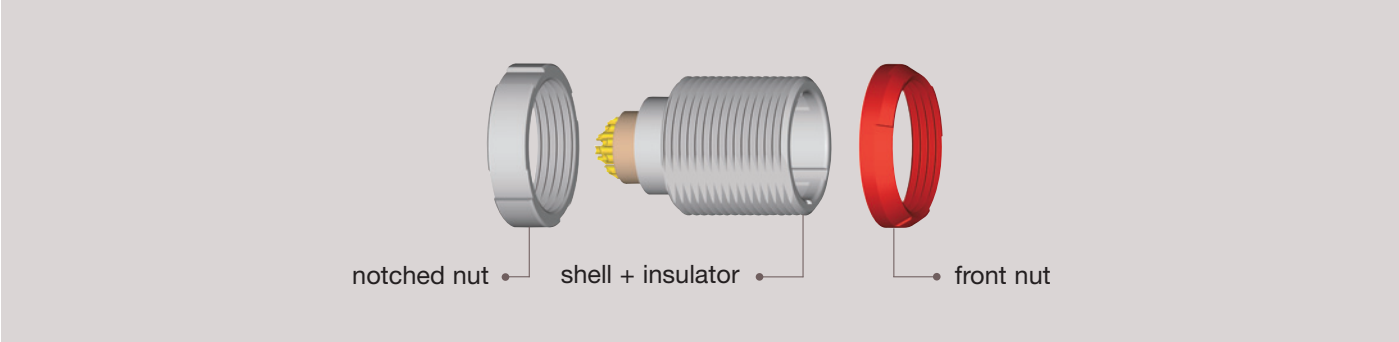

Free socket

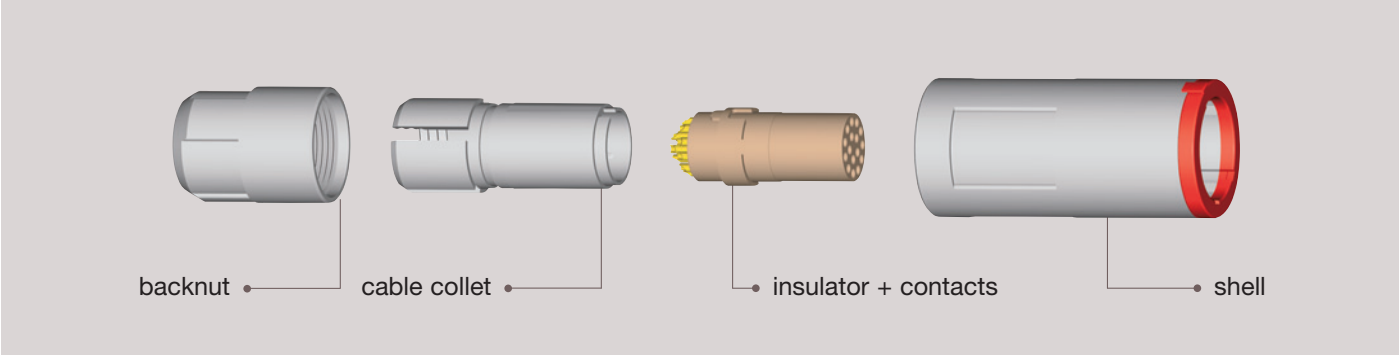

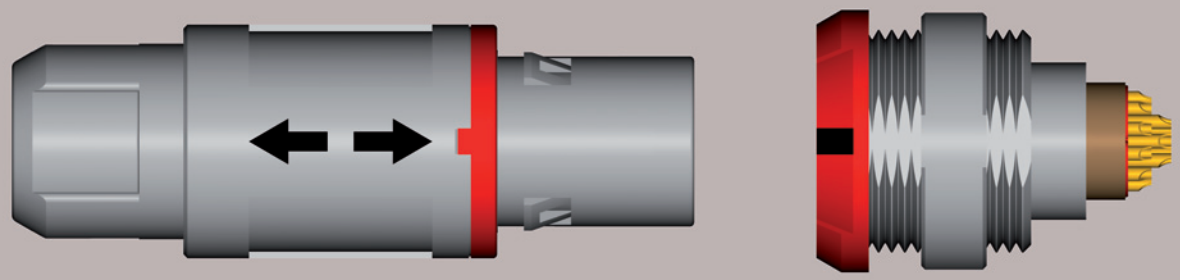

2P SERIES

2P Series

This ø 18 mm connector accomodates cable diameter up to 9.2 mm and allows up to 34 solder or crimp contacts.
Top quality lightweight but rugged materials have been chosen to optimize most applications. Polysulfone (PSU), UL certified as autoextinguishable, can be sterilized by gas or by steam. The contacts are gold-plated over copper and nickel to ensure at least 1000 mating/unmating cycles without significantly affecting the electrical characteristics. Five keys on the plug nose will allow blind mating. Colour coding of the plug and socket flange will give an instant visual indication as to whether connectors are compatible or not. Water resistant to IP 66 options are available.

Standard models (page 34 to 36)

Straight plugs | **Fixed sockets** | **Free sockets**

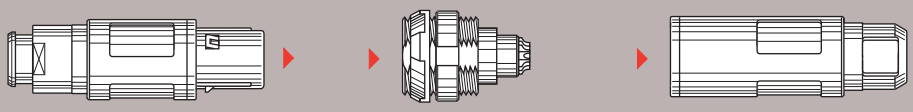

CAB CKB CRB

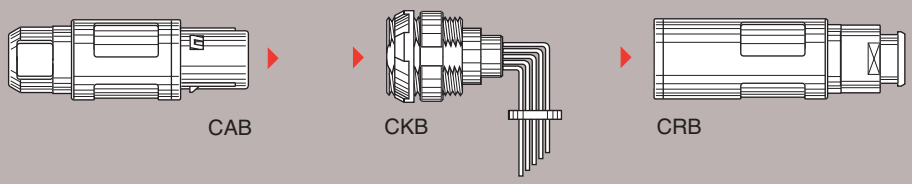

CAB CKB CRB

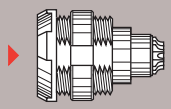

CLB

Watertight models (page 37 to 38)

Straight plug | **Fixed socket**

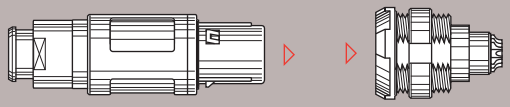

CFB CNB

Free socket

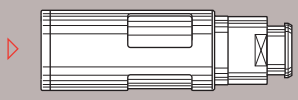

CSB

Disposable socket (limited use) (page 38)

Fixed socket

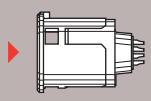

CUJ

Fluidic configuration (page 39)

Straight plug | **Fixed socket**

CAB CLB

Part numbering system

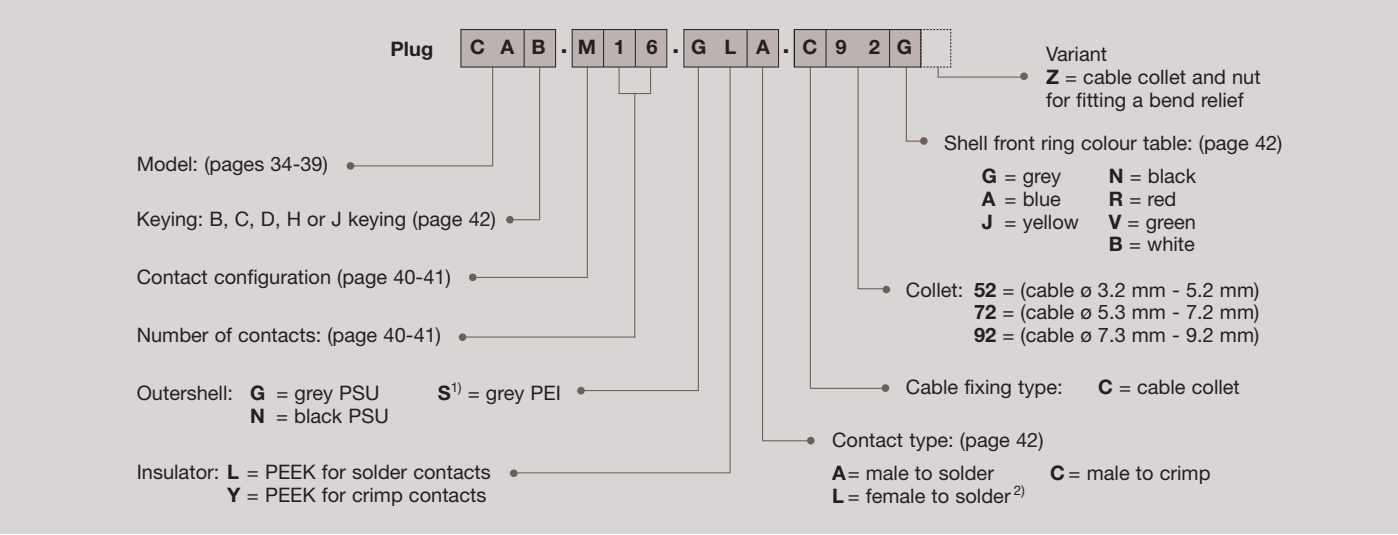

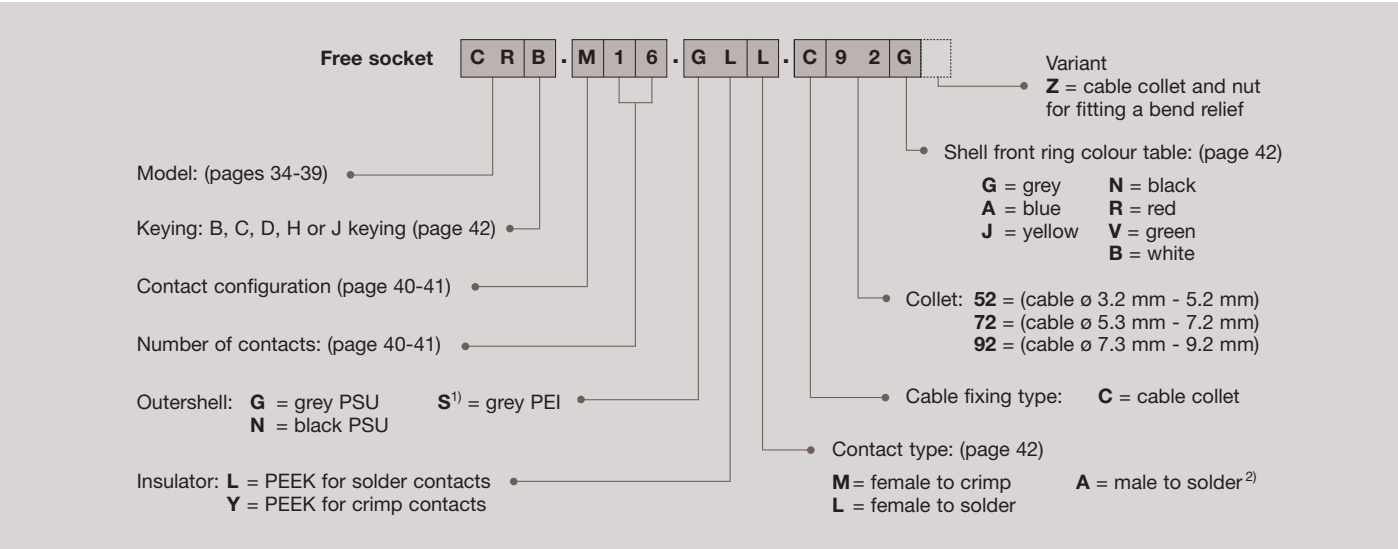

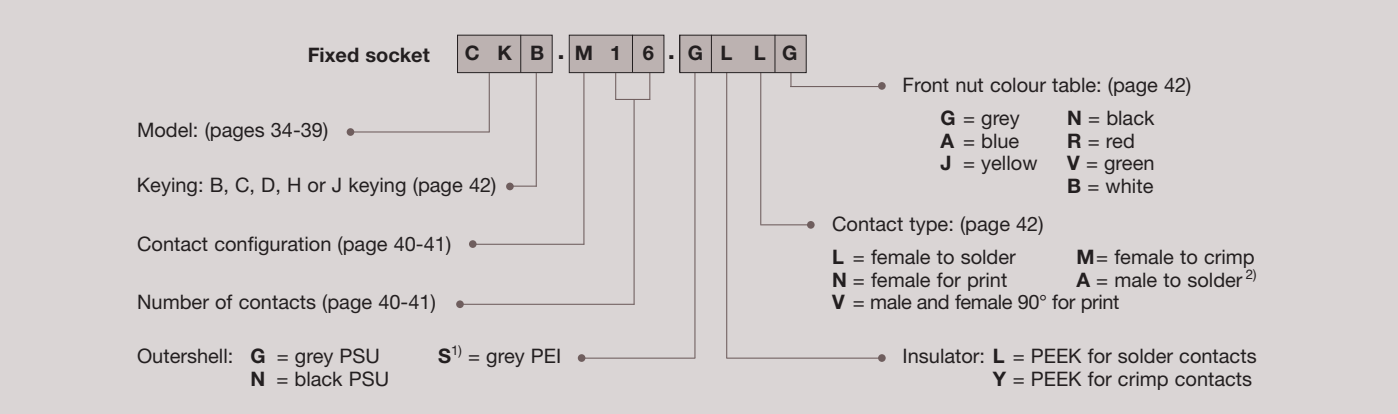

CAB.M16.GLA.C92G Straight plug with cable collet and alignment key (B), multipole type with 16 male contacts to solder, grey PSU outershell, PEEK insulator, collet for a cable ø 7.3 to 9.2 mm and grey front ring.

CRB.M16.GLL.C92G Free socket with two nuts and alignment key (B), multipole type with 16 female contacts to solder, grey PSU outershell, PEEK insulator, collet for a cable ø 7.3 to 9.2 mm and grey front ring.

CKB.M16.GLLG Fixed socket with two nuts and alignment key (B), multipole type with 16 female contacts to solder, grey PSU outershell, PEEK insulator, and grey front ring.

Note: 1) for extensive steam sterilization we propose polytherimide ULTEM® (PEI)
2) model available only with H and J keying and with 26 or 34 contacts (inverted contacts)

Standard models (IP50)

C . . .

Fixed socket

1 Outershell
2 Insulator
3 Female crimp contact
4 Hexagonal nut

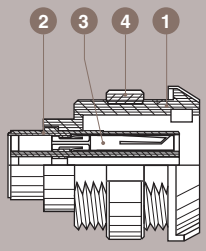

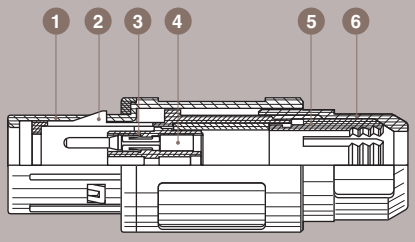

Straight plug

1 Outershell
2 Latch sleeve
3 Insulator
4 Male crimp contact
5 Collet + mid piece
6 Collet nut

Characteristics	Value	Standards
Average retention force when pulling on the cable 1N = 0.102 kg	150 N	IEC 60512-8 test 15f
Cable retention force (depends on cable construction) 1N = 0.102 kg	150 - 250 N	IEC 60512-9 test 17c

Characteristics	Value	Standards
Endurance (latching)	> 1000 cycles	IEC 60512-5 test 9a
Working temperature range (PSU)	-50/+150°C	–
Working temperature range (PEI)	-50/+170°C	–

CAB Straight plug with cable collet

Part Number	Cable ø	
	min	max
CAB.M●●.GLA.C52G	3.2	5.2
CAB.M●●.GLA.C72G	5.3	7.2
CAB.M●●.GLA.C92G	7.3	9.2

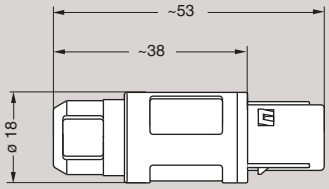

CAB Straight plug with cable collet and nut for fitting a bend relief

Part Number	Cable ø	
	min	max
CAB.M●●.GLA.C52GZ	3.2	5.2
CAB.M●●.GLA.C72GZ	5.3	7.2
CAB.M●●.GLA.C92GZ	7.3	9.2

Note: the bend relief must be ordered separately (see page 44).

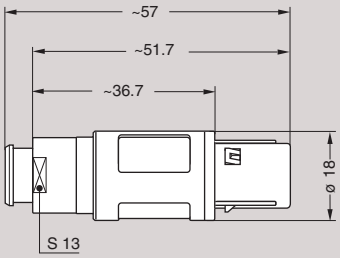

CKB Fixed socket with two nuts (back panel mounting)

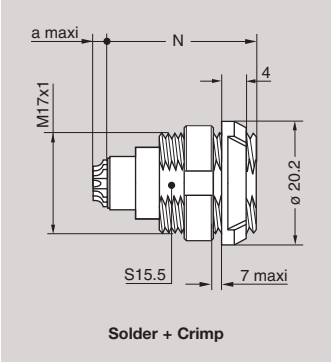

Solder + Crimp

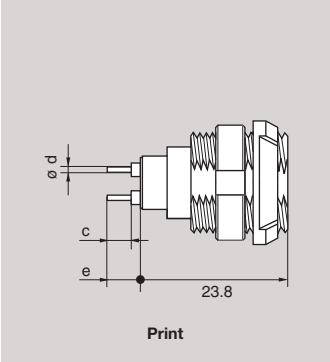

Print

Part Number	number of contacts	Contact						
		Solder		Crimp		Print		
		N	a	N	a	c	ø d	e
CKB.M16.GLLG	16	23.8	3.4	25.1	0	5.7	0.7	6.0
CKB.M19.GLLG	19	23.8	4.9	25.1	0	5.7	0.7	6.0
CKB.M26.GLLG	26	23.8	4.7	25.1	0	3.0	0.5	3.0
CKB.M32.GLLG	32	23.8	4.7	25.1	0	3.0	0.5	3.0

Note: for PCB drilling pattern see page 46.
Panel hole see page 46.

CKB Fixed socket with two nuts with 90º contacts (back panel mounting)

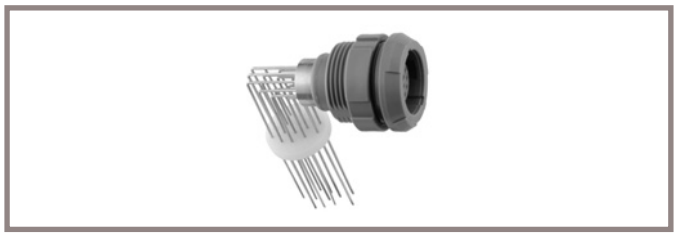

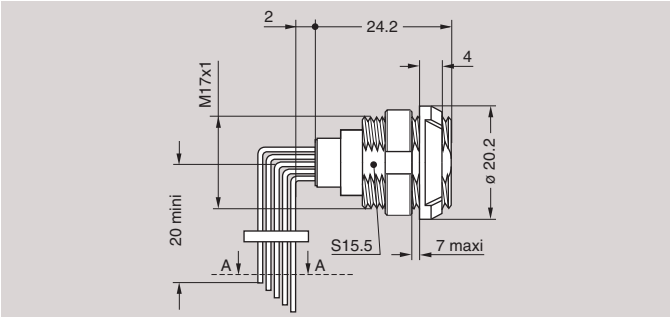

Part Number	number of contacts
CKB.M16.GLVG	16
CKB.M19.GLVG	19
CKB.M26.GLVG	26

Note: for PCB drilling pattern see page 46.
Panel hole see page 46.

CLB Fixed socket, nut fixing

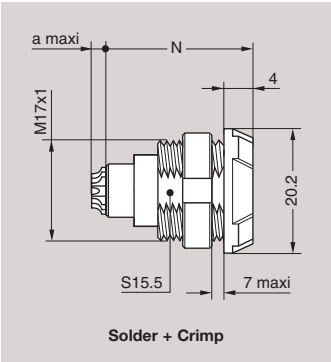

Solder + Crimp

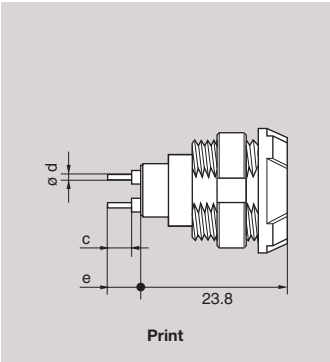

Print

Part Number	number of contacts	Contact						
		Solder		Crimp		Print		
		N	a	N	a	c	ø d	e
CLB.M16.GLLG	16	23.8	3.4	25.1	0	5.7	0.7	6.0
CLB.M19.GLLG	19	23.8	4.9	25.1	0	5.7	0.7	6.0
CLB.M26.GLLG	26	23.8	4.7	25.1	0	3.0	0.5	3.0
CLB.M32.GLLG	32	23.8	4.7	25.1	0	3.0	0.5	3.0

Note: for PCB drilling pattern see page 46.
Panel hole see page 46.

CRB Free socket with cable collet

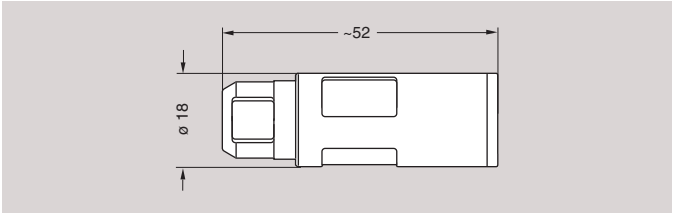

Part Number	Cable ø	
	min	max
CRB.M●●.GLL.C52G	3.2	5.2
CRB.M●●.GLL.C72G	5.3	7.2
CRB.M●●.GLL.C92G	7.3	9.2

CRB Free socket with cable collet and nut for fitting a bend relief

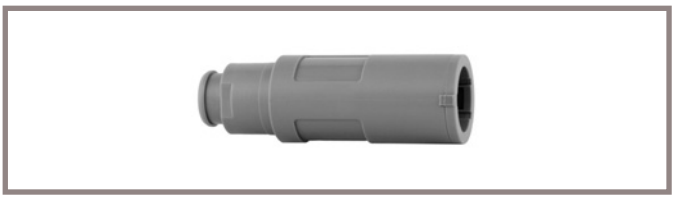

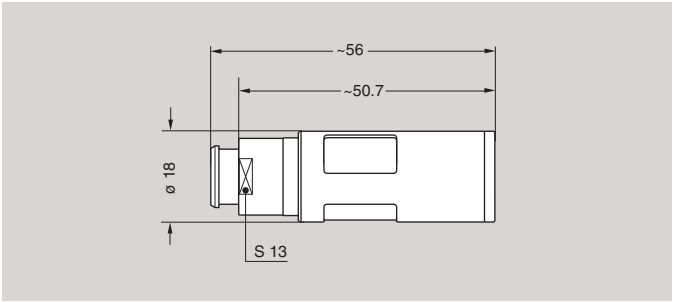

Part Number	Cable ø	
	min	max
CRB.M●●.GLL.C52GZ	3.2	5.2
CRB.M●●.GLL.C72GZ	5.3	7.2
CRB.M●●.GLL.C92GZ	7.3	9.2

Note: the bend relief must be ordered separately (see page 44).

Watertight models (IP66)

C . M . .

Fixed socket

1 Outershell
2 Insulator
3 Female crimp contact
4 Hexagonal nut
5 O-ring

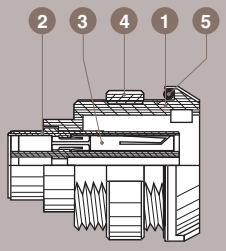

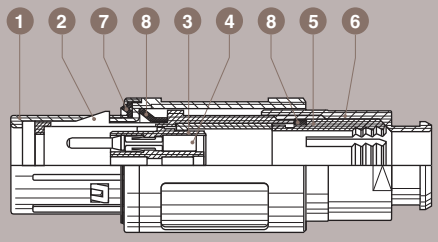

Straight plug

1 Outershell
2 Latch sleeve
3 Insulator
4 Male crimp contact
5 Collet + mid piece
6 Collet nut
7 Front seal
8 Gasket

Characteristics	Value	Standards
Average retention force when pulling on the cable 1N = 0.102 kg	90 N	IEC 60512-8 test 15f
Cable retention force (depends on cable construction) 1N = 0.102 kg	50 - 150 N	IEC 60512-9 test 17c

Characteristics	Value	Standards
Endurance (latching)	> 1000 cycles	IEC 60512-5 test 9a
Working temperature range (PSU)	-50/+150°C	–
Working temperature range (PEI)	-50/+170°C	–
Index protection	IP66	IEC-60529

CFB Straight plug with cable collet and nut for fitting a bend relief

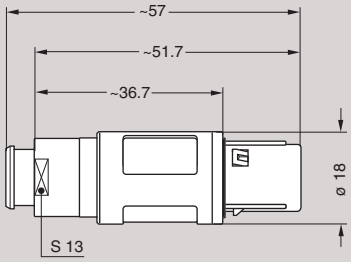

Part Number	Cable ø	
	min	max
CFB.M●●.GLA.C52GZ	3.2	5.2
CFB.M●●.GLA.C72GZ	5.3	7.2
CFB.M●●.GLA.C92GZ	7.3	9.2

Note: the bend relief must be ordered separately (see page 44).

CNB Fixed socket, nut fixing

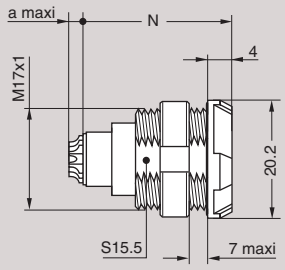

Solder + Crimp

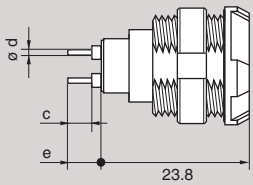

Print

Part Number	number of contacts	Contact						
		Solder		Crimp		Print		
		N	a	N	a	c	ø d	e
CNB.M16.GLLG	16	23.8	3.4	25.1	0	5.7	0.7	6.0
CNB.M19.GLLG	19	23.8	4.9	25.1	0	5.7	0.7	6.0
CNB.M26.GLLG	26	23.8	4.7	25.1	0	3.0	0.5	3.0
CNB.M32.GLLG	32	23.8	4.7	25.1	0	3.0	0.5	3.0

Note: for PCB drilling pattern see page 46.
Panel hole see page 46.

CSB Free socket with cable collet and nut for fitting a bend relief

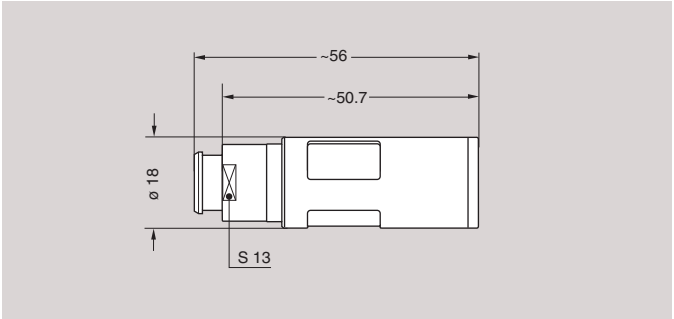

Part Number	Cable ø	
	min	max
CSB.M●●.GLL.C52GZ	3.2	5.2
CSB.M●●.GLL.C72GZ	5.3	7.2
CSB.M●●.GLL.C92GZ	7.3	9.2

Note: the bend relief must be ordered separately (see page 44).

Disposable socket (limited use)

C U . . .

Fixed socket

1 Outershell
2 Male contact

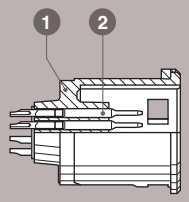

Characteristics	Value	Standards
Endurance for CU● (latching) [1]	100 cycles min	IEC 60512-5 test 9a
Working temperature range (PSU)	-50/+150°C	–
Average latching force	5.5N	IEC 60512-7 test 13a
Average unmating force	8.5N	IEC 60512-7 test 13a
Average retention force	150N	IEC 60512-7 test 13a

Note: [1] with machined contacts. The outershell and the insulator are moulded out of the same material (PSU).

CU● Fixed disposable socket, snap on fixing

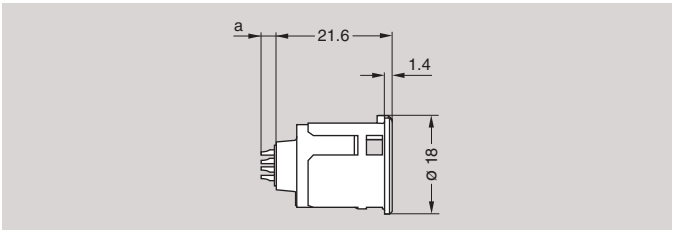

C U J . M 2 6 . G G A

Keying: H, J

Number of contacts: 26, 34

Color:
AA = blue
BB = white
GG = grey
JJ = yellow
NN = black
RR = red
VV = green

Number of contacts	a
26	5.5
34	7.0

Note: contacts are ø 0.5 mm male with ø 0.44 mm solder buckets.

CUG Protective backshell for CU●

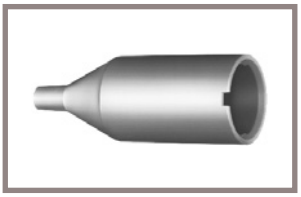

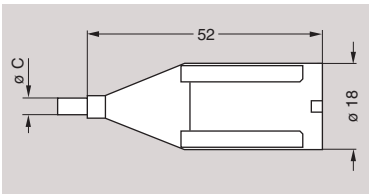

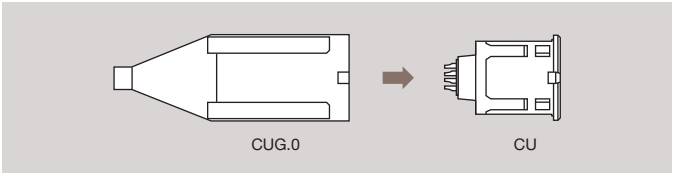

C U G . 0 2 5 . A G

ø C (mm):
2.5 mm = 025
3.2 mm = 032
5.2 mm = 052

Material: A = ABS

Color:
B = white
G = grey

Note: ABS working temperature: -30°C +90°C.
All dimensions are in millimeters.

Fluidic models

C | | . | | | . G | | . | | | | | |

Fixed socket

1 Outershell
2 Insulator
3 Female crimp contact
4 Hexagonal nut

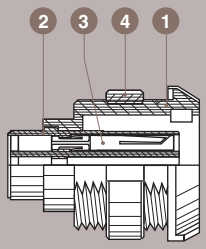

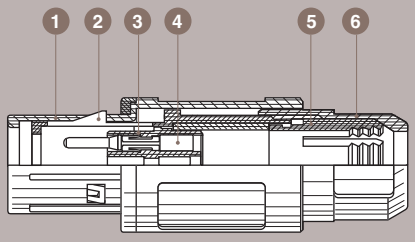

Straight plug

1 Outershell
2 Latch sleeve
3 Insulator
4 Male crimp contact
5 Collet + mid piece
6 Collet nut

Characteristics	Value	Standards
Average retention force when pulling on the cable 1N = 0.102 kg	90 N	IEC 60512-8 test 15f
Cable retention force (depends on cable construction) 1N = 0.102 kg	50 - 150 N	IEC 60512-9 test 17c

Characteristics	Value	Standards
Endurance (latching)	> 1000 cycles	IEC 60512-5 test 9a
Working temperature range (PSU)	-50/+150°C	–
Working temperature range (PEI)	-50/+170°C	–

CAB Straight plug with cable collet

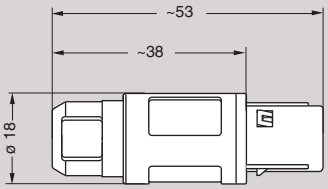

Part Number	Cable ø	
	min	max
CAB.012.GLA.C52G	3.2	5.2
CAB.012.GLA.C72G	5.3	7.2
CAB.012.GLA.C92G	7.3	9.2

CLB Fixed socket nut fixing

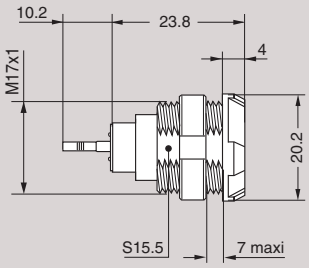

Part Number	Number of low voltage contacts	Fluidic contact	Maximum working pressure (bars)
CLB.012.GLLG	4	without valve	6
CLB.015.GLLG	10	without valve	6
CLB.P12.GLLG	4	with valve	6
CLB.P15.GLLG	10	with valve	6

Note: panel hole see page 46.

Insert configuration

C | | . | | | . | | | . | | | | | |

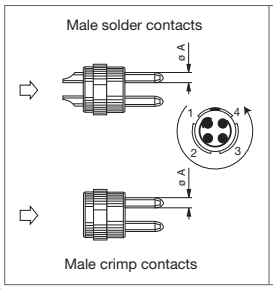

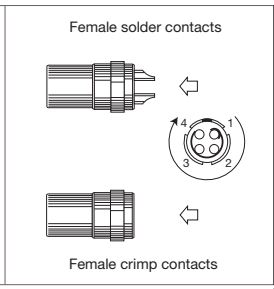

	Reference	Number of contacts	Contact ø (mm)	Solder bucket ø (mm)[4]	Crimp bucket ø (mm)[4]	Contact type				Test voltage (kV rms)[1] Contact-contact	Air clearance min[2] (mm) Creepage distance min[3] (mm)	Rated current (A)
						Solder	Crimp	Print (straight)	Print (elbow)			
Multipole	M02	2	2.0	1.8	2.4	●	●	●	●	2.10	1.60	30.00
	M03	3	1.6	1.4	1.9	●	●	●	●	2.40	1.50	17.00
	M04	4	1.3	1.0	1.4	●	●	●	●	1.85	1.80	15.00
	M05	5	1.3	1.0	1.4	●	●	●	●	1.75	1.10	14.00
	M06	6	1.3	1.0	1.4	●	●	●	●	1.35	0.85	12.00
	M07	7	1.3	1.0	1.4	●	●	●	●	1.75	0.95	11.00
	M08	8	0.9	0.8	1.1	●	●	●	●	1.50	1.00	10.00
	M10	10	0.9	0.8	1.1	●	●	●	●	1.45	0.75	8.00
	M12	12	0.7	0.8	0.8	●	●	●	●	1.25	0.85	7.00
	M16	16	0.7	0.8	0.8	●	●	●	●	1.50	0.65	6.00
	M19	19	0.7	0.8	0.8	●	●	●	●	1.40	0.60	5.00
	M26	26	0.5	0.4	-	●	-	●	●	1.00	0.55	2.00
	M32	32	0.5	0.4	-	●	-	●	-	0.70	0.35	1.50
	M34	34	0.5	0.4	-	●	-	-	-	0.70	0.30	1.50

Note: 1) depending on specific application and related standard, morerestrictive operating voltage may apply.
We suggest operating voltage = 1/3 test voltage, see page 68.
2) shortest distance in air between two conductive parts.
3) shortest distance along the surface of the insulating material between two conductive parts.
4) for a given AWG, the diameter of some stranded conductor design is larger than the solder cup diameter (see page 69).

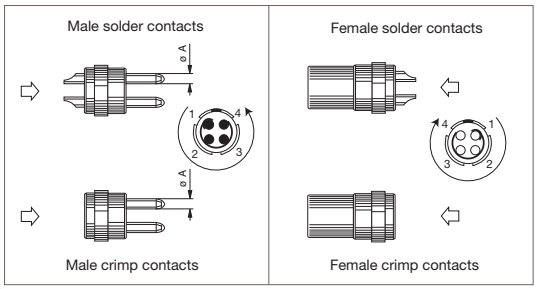

	Reference	Number of contacts	Contact ø (mm)	Solder bucket ø (mm)[5]	Crimp bucket ø (mm)[5]	Contact type: Solder	Contact type: Crimp	Contact type: Print (straight)	Contact type: Print (elbow)	Test voltage (kV rms)[1] Contact-contact	Air clearance min[2] (mm) Creepage distance min[3] (mm)	Rated current (A)
Fluidic	012	4	0.7	0.8	0.8	●	●	-	-	0.85	0.60	5.0
	015	10	0.7	0.8	0.8	●	●	-	-	1.15	0.90	5.0
	P12[6]	4	0.7	0.8	0.8	●	●	-	-	0.85	0.60	9.0
	P15[6]	10	0.7	0.8	0.8	●	●	-	-	1.15	0.90	6.0
Coaxial	804[4]	4	0.7	0.8	0.8	●	●	-	-	0.85	0.60	5.0
	810[4]	10	0.7	0.8	0.8	●	●	-	-	1.25	0.90	5.0

Note: 1) depending on specific application and related standard, morerestrictive operating voltage may apply.
We suggest operating voltage = 1/3 test voltage, see page 68.
2) shortest distance in air between two conductive parts.
3) shortest distance along the surface of the insulating material between two conductive parts.
4) configuration 804 and 810 use «C» type coaxial contact.
5) for a given AWG, the diameter of some stranded conductor design is larger than the solder cup diameter (see page 69).
6) configuration P12 and P15 use fluidic contact with valve (FGG.P1.150.ACV and EGG.P1.150.ACV). Contacts must be ordered separately.

Alignment key

C . . . .

Verify the third digit of the part number in order to select the right keying.
The standard keying is «B» coded.

Keying (plug front view)			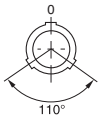		
Reference	B	C	D	H	J
Contact type for plug	male	male	male	female	female
Contact type for socket	female	female	female	male	male

Outer shell material

C . . . .

Material	Ref.	Colour	Temperature
PEI	S	Grey	-50° / +170°C
PSU	G	Grey	-50° / +150°C
PSU	N	Black	

Note: for extensive sterilization use PEI

Contact type

C . . . .

Select the type of contact: solder or crimp?

Plug

Type	Male	Female
solder	A	L[1)]
crimp	C	-

Socket

Type	Male	Female
solder	A[1)]	L
crimp	-	M
print	-	N
print 90°	V	V

Note: 1) only for H and J keying with 26 or 34 contacts

When should I use crimp rather than solder contacts ?

Soldering

- recommended for small volumes
- requires little amount of tooling (soldering iron)
- requires more time

Crimping

- recommended for large volumes
- no heat is required to make the connection
- for contacts with high density
- for use in high temperature environment
- requires extra tooling (crimping tools)

Colour coding

C . . . .

	Colours					
	grey	blue	yellow	black	red	green
Reference	G	A	J	N	R	V
RAL code	7001	5002	1016	9005	3020	6024

Note: the RAL colours are indicative and depend on raw material and production process. Colour may differ.

Easy identification with the assistance of colour coding.
Outershell is only available in grey or black.

Accessories

CAG-CLG Insulator for crimp contacts

male / white marking

female / red marking

Contact configuration	Insulator part number	
	For male contact	For female contact
M02	CAG.302.YL	CLG.402.YL
M03	CAG.303.YL	CLG.403.YL
M04	CAG.304.YL	CLG.404.YL
M05	CAG.305.YL	CLG.405.YL
M06	CAG.306.YL	CLG.406.YL
M07	CAG.307.YL	CLG.407.YL
M08	CAG.308.YL	CLG.408.YL
M10	CAG.310.YL	CLG.410.YL
M12	CAG.312.YL	CLG.412.YL
M16	CAG.316.YL	CLG.416.YL
M19	CAG.319.YL	CLG.419.YL

CAG-CLG Crimp contacts, kit with the number of contacts in a tube

Contact configuration	nb. of contacts	ø contact (mm)	Kit contact part number	
			Male	Female
M02	2	2.0	CAG.575.02C	CLG.675.02M
M03	3	1.6	CAG.570.03C	CLG.670.03M
M04	4	1.3	CAG.565.04C	CLG.665.04M
M05	5	1.3	CAG.565.05C	CLG.665.05M
M06	6	1.3	CAG.565.06C	CLG.665.06M
M07	7	1.3	CAG.565.07C	CLG.665.07M
M08	8	0.9	CAG.560.08C	CLG.660.08M
M10	10	0.9	CAG.560.10C	CLG.660.10M
M12	12	0.7	CAG.555.12C	CLG.655.12M
M16	16	0.7	CAG.555.16C	CLG.655.16M
M19	19	0.7	CAG.555.19C	CLG.655.19M

CAG Collet

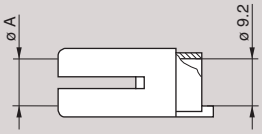

Part Number	ø A (mm)	Cable ø (mm)	
		min.	max.
CAG.752.•••	5.2	3.2	5.2
CAG.772.•••	7.2	5.3	7.2
CAG.792.•••	9.2	7.3	9.2

Note: ••• = UGG (grey PSU), UGN (black PSU), TGG (grey PEI)

CKG Plastic front nut for CKB models

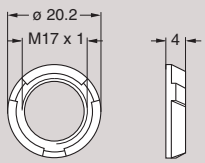

Part Number	Mat.	Colours
CKG.240.UA	PSU	blue
CKG.240.UG	PSU	grey
CKG.240.UJ	PSU	yellow
CKG.240.UN	PSU	black
CKG.240.UR	PSU	red
CKG.240.UV	PSU	green

CAM Nut for fitting a GMA.2B bend relief

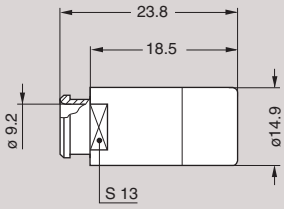

Part Number	Mat.	Colours
CAM.130.UG	PSU	grey
CAM.130.UN	PSU	black
CAM.130.TG	PEI	grey

Note: all dimensions are in millimeters

FGG.P1 Male fluidic contact with valve

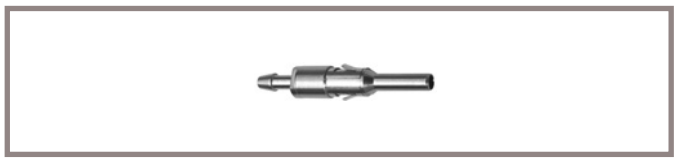

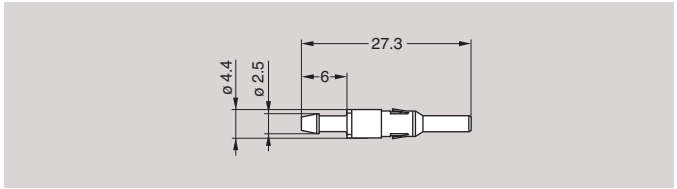

Part Number
FGG.P1.150.ACV

Note: Connectors are delivered without the P1 contacts.

EGG.P1 Female fluidic contact with valve

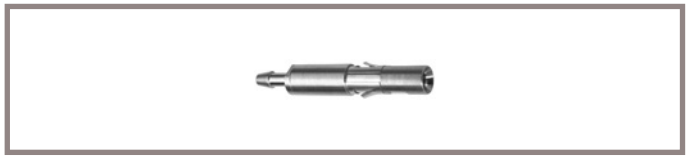

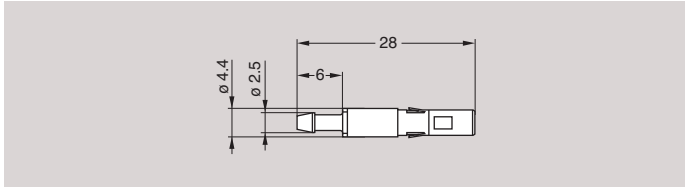

Part Number
EGG.P1.150.ACV

Note: Connectors are delivered without the P1 contacts.

GMA Bend relief

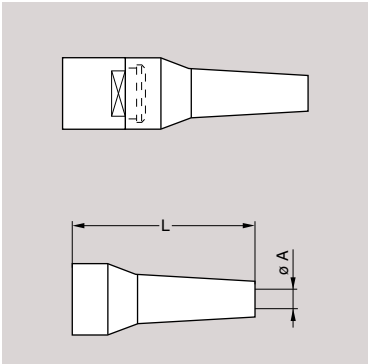

A bend relief absorbs the force that may be exerted on cables.
These are designed for plugs and free sockets with cable collet and nut.

Part Number	Dimensions (mm)				Material	Temperature range	
	Bend relief		Cable ø			in dry atmosphere	in water steam
	A	L	max.	min.			
GMA.2B.040.DG	4.0	36	4.5	4.0	TPU (Thermoplastic Polyurethane)	-40°C, +80°C	–
GMA.2B.045.DG	4.5	36	5.0	4.5			
GMA.2B.050.DG	5.0	36	5.5	5.0			
GMA.2B.060.DG	6.0	36	6.5	6.0			
GMA.2B.070.DG	7.0.	36	7.7	7.0			
GMA.2B.080.DG	7.8	36	8.8	7.8			
GMA.2B.040.RG	4.0	41	4.4	4.0	Silicone elastomer VMQ	-60°C, +200°C	+140°C
GMA.2B.045.RG	4.5	41	5.0	4.5			
GMA.2B.051.RG	5.1	41	5.6	5.1			
GMA.2B.057.RG	5.7	41	6.2	5.7			
GMA.2B.063.RG	6.3	41	7.0	6.3			
GMA.2B.071.RG	7.1	41	7.9	7.1			
GMA.2B.080.RG	8.0	41	9.0	8.0			

Note: the last letter «G» of the part number indicates a grey colour, see the adjacent table and replace letter «G» by the letter of the colour required.

Reference	Colours
A	blue
B	white
G	grey
J	yellow
M	brown
N	black
R	red
S	orange
V	green

Note: the selection of pigments, which should remain stable at high temperature, is limited by the new regulations. For this reason, some colours will be a shade different from those used for TPU bend reliefs. The selected solutions represent the best possible compromise.

Tooling

DPC.91.701.V Crimping tool

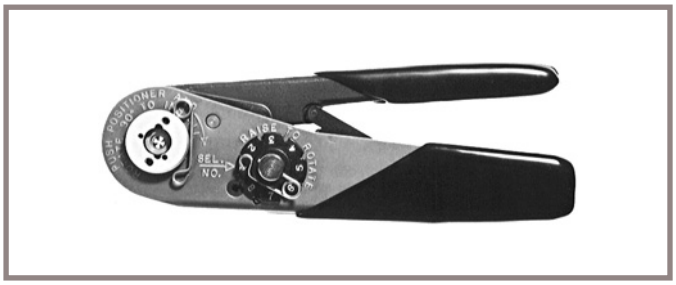

DCE Positioners for crimp contacts

male

female

DCF Automatic extraction tools for crimp contacts

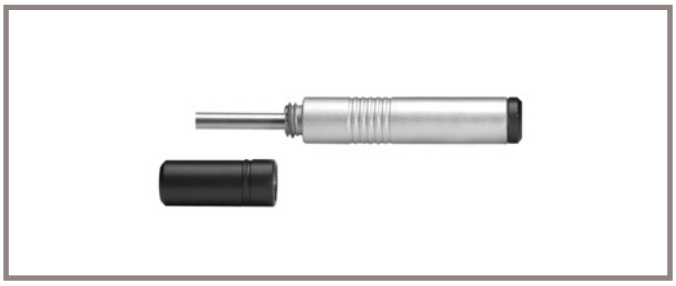

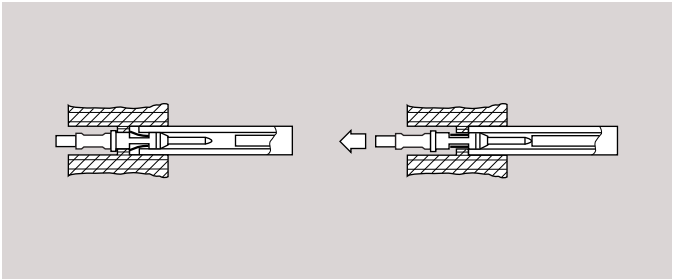

Type	Conductor (mm)	Contact ø AWG	Positioner part number		Selector No Setting	Part number extractor
			Male	Female		For male contact and female contact
M02	2.0	12-14-16	DCE.91.202.BVCM	DCE.91.202.BVCM	-	DCC.91.202.5LA[1)]
M03	1.6	14-16-18	DCE.91.162.BVCM	DCE.91.162.BVCM	-	DCF.91.162.2LT
M04/M05/M06/M07	1.3	18-20	DCE.91.132.BVC	DCE.91.132.BVM	8-7	DCF.91.131.2LT
M08/M10	0.9	20-22-24	DCE.91.092.BVC	DCE.91.092.BVM	6-5-5	DCF.91.090.2LT
M12/M16/M19	0.7	22-24-26	DCE.91.072.BVC	DCE.91.072.BVM	6-5-5	DCF.91.070.2LT
M26/M32	0.5	28-30-32	DCE.91.052.BVC	DCE.91.052.BVM	4-3-3	DCF.91.050.2LT

Note: 1) this model is thumb-operated.
This model is used for male and female contacts. The variance in conductor stranding diameter for the minimum AWG is such that some can have a cross section which is not sufficient to guarantee crimping as per IEC 60352-2 standard.

DCK Retention testing tools for crimp contacts

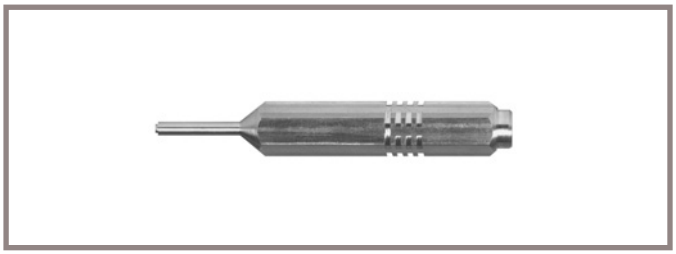

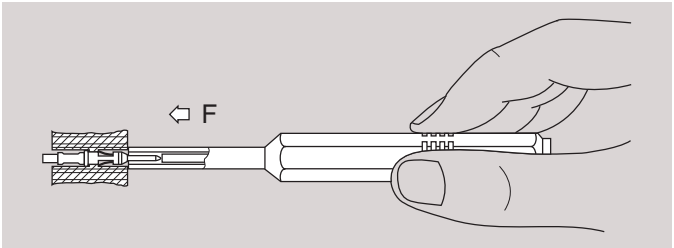

Contact ø (mm)	Test force (N)	Testing tool part number	
		Male contact	Female contact
0.7	10	DCK.91.071.0LRC	DCK.91.071.0LRM
0.9	14	DCK.91.091.4LRC	DCK.91.091.4LRM
1.3	25	DCK.91.132.5LRC	DCK.91.132.5LRM

Note: all dimensions are in millimeters

Panel hole

For CK●, CL●, and CN●

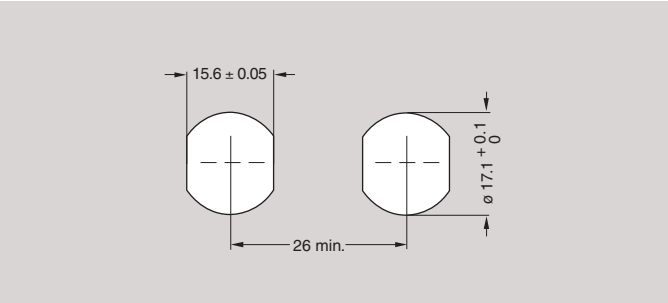

Note: socket mounting nut torque = 0.8 Nm.

PCB drilling pattern

For straight contacts

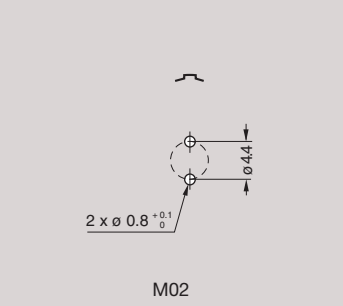

M02

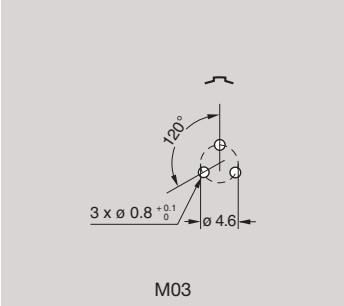

M03

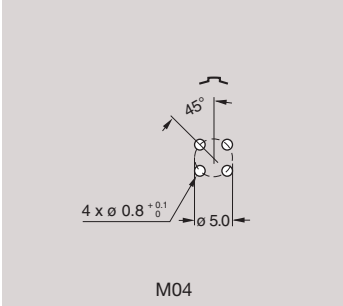

M04

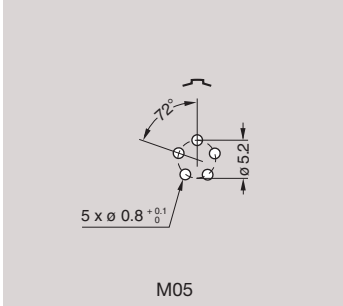

M05

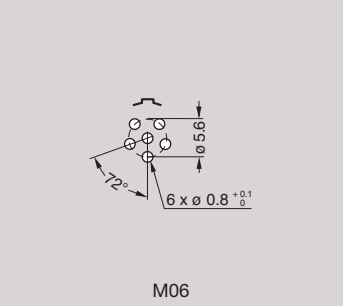

M06

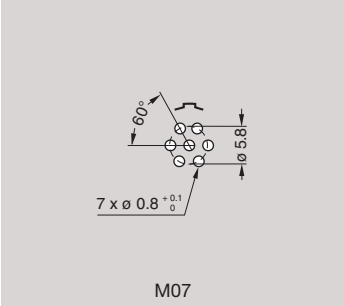

M07

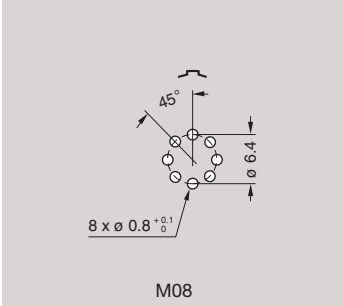

M08

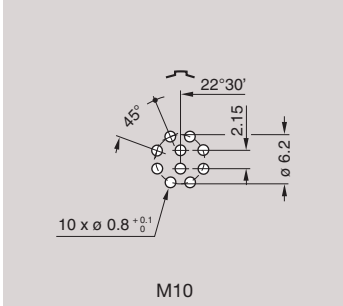

M10

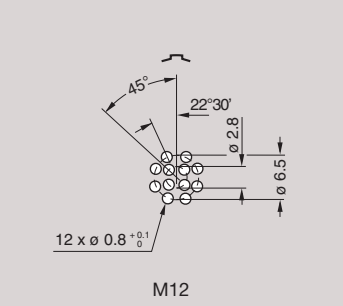

M12

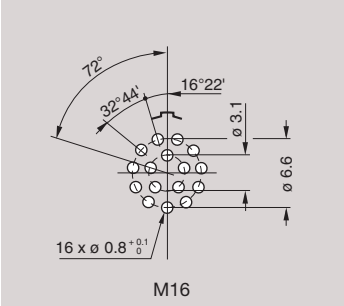

M16

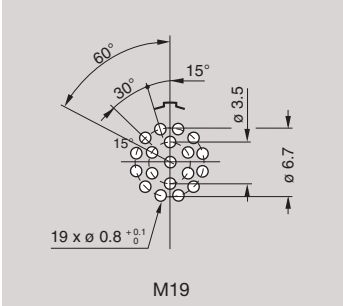

M19

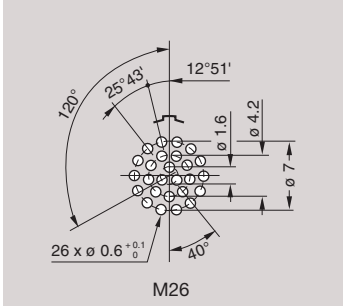

M26

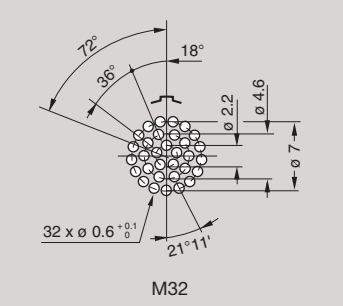

M32

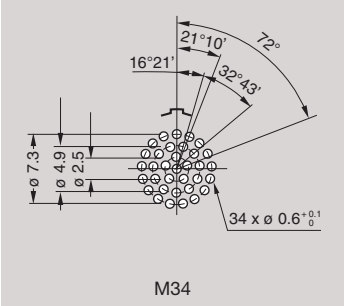

M34

For 90° elbow contacts (A-A view)

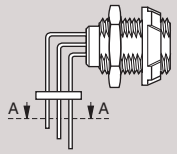

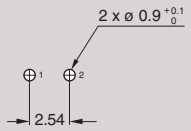

M02

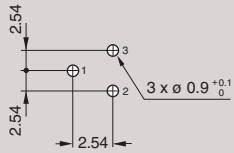

M03

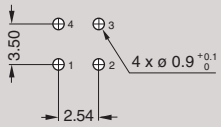

M04

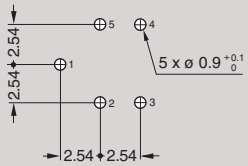

M05

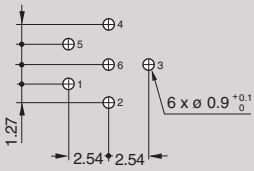

M06

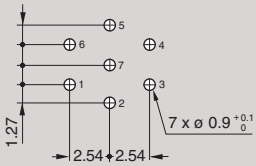

M07

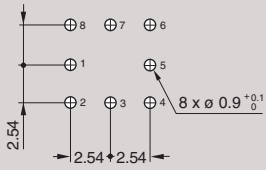

M08

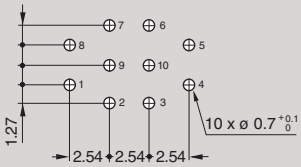

M10

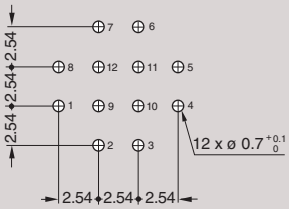

M12

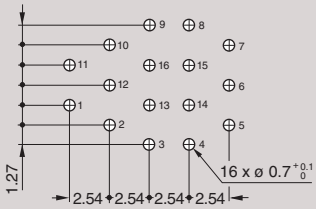

M16

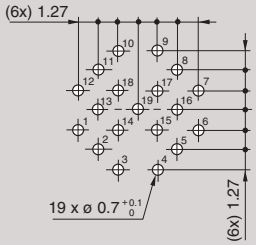

M19

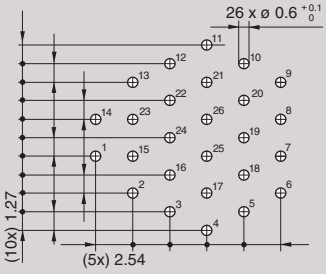

M26

Assembly instructions

Solder contacts

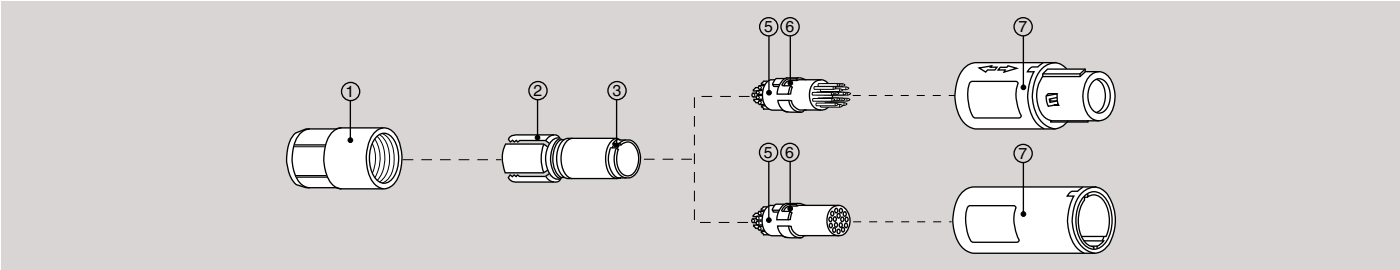

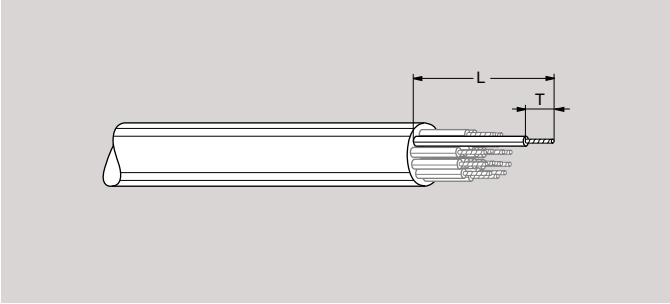

1. Strip the cable according to the lengths given in the table. Tin the conductors.

Configuration	Dimensions (mm)	
	L	T
M02	19.0	4.0
M03	19.0	3.5
M04, M05, M06, M07	18.0	3.5
M08, M10, M12, M16, M19	17.0	3.0
M26, M32	17.0	2.5

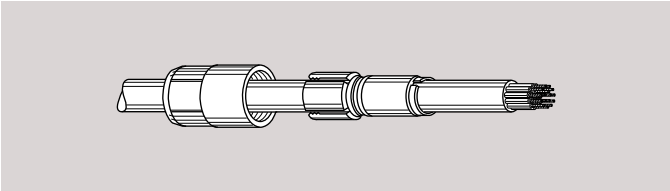

2. Slide the collet nut ① and then the collet ② onto the cable.

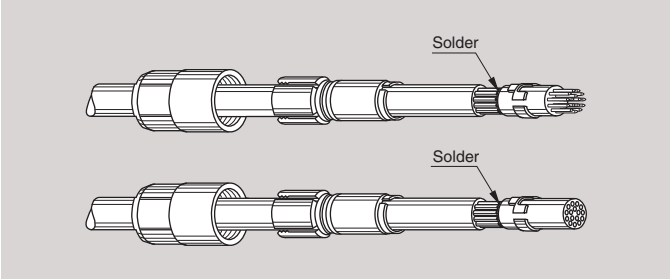

3. Solder conductors into contacts, making sure that neither solder nor flux gets onto the insulator or cable insulation.

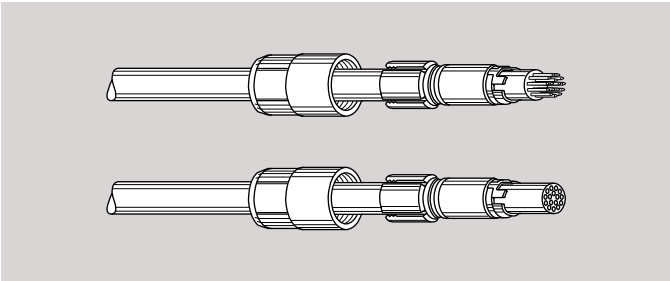

4. Slide the collet ② forward and locate slot ③ in the key of the insulator ⑤.
   Slide collet nut ① over collet ② and then push the whole assembly into the shell ⑦ whilst positioning it to ensure that the slot ⑥ of insulator ⑤ locates in the inside key of the shell. Tighten the collet nut ① to the maximum torque of 0.5 Nm.

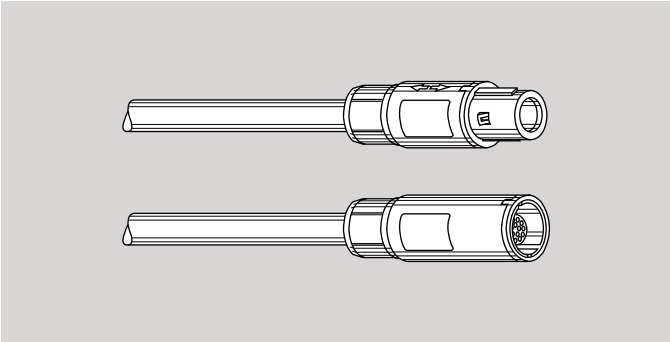

For PSU only:
We recommend ONLY the use of VTVC-6 Clear Vibra-tite or ThreeBond 1401 to secure the connector backnut. The use of other materials could result in damage to the connector.
The only recommended chemical cleaner is Isopropyl Alcohol.

Crimp contacts

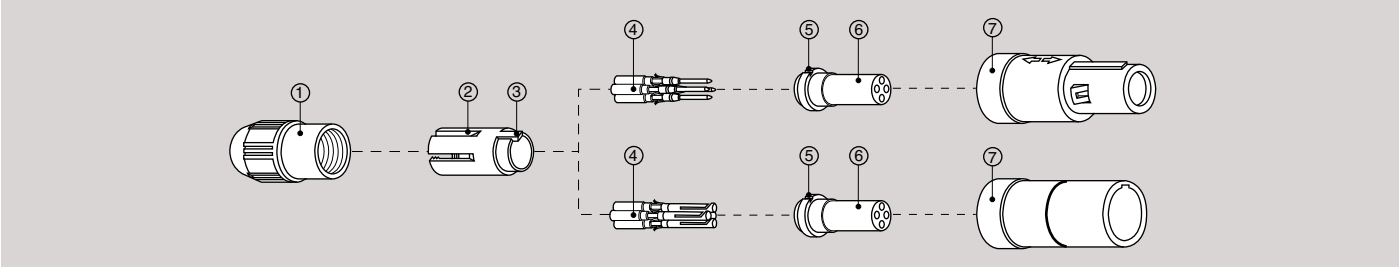

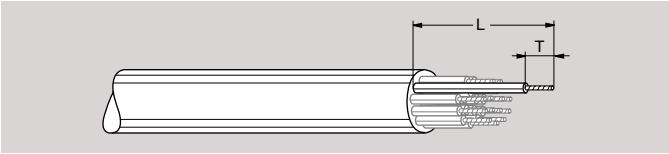

1. Strip the cable according to the lengths given in the table.

Configuration	Dimensions (mm)	
	L	T
M02	17.0	5.5
M03	17.0	5.5
M04, M05, M06, M07	15.0	4.0
M08, M10, M12	15.0	4.0
M16, M19	15.0	4.0

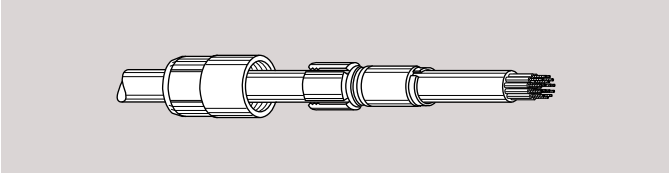

2. Slide the collet nut ① and then the collet ② onto the cable.

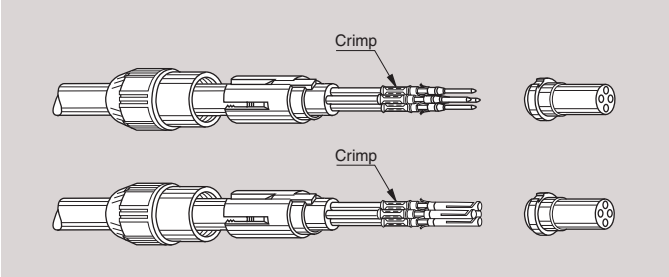

3. Fix the appropriate positioner (table page 45) in the crimping tool. Set selector to the number corresponding to the conductor AWG as indicated on the positioner label. Fit conductor into contact ④ and make sure it is visible through the inspection hole in the crimp barrel. Slide conductor-contact combination into the open crimping tool; make sure that the contact is fully pushed into the positioner. Close the tool. Remove from crimping tool and check that conductor is secure in contact and shows in inspection hole.

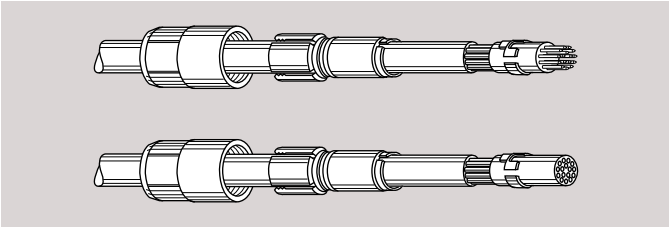

4. Now arrange contact-conductor combinations according to the insert marking and locate them into the insert ⑥. Check that all contacts are correctly located and remain in position when given a gentle pull.

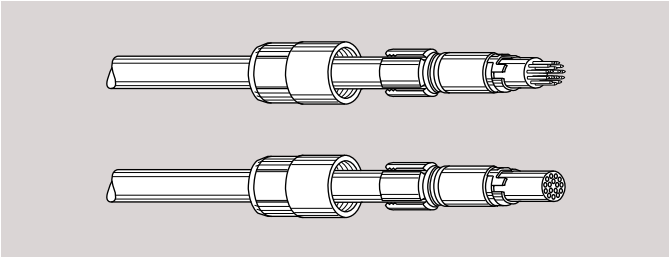

5. Slide the collet ② forward and locate slot ③ in the key of the insulator ⑤. Slide collet nut ① over collet ② and then push the whole assembly into the shell ⑦ whilst positioning it to ensure that the slot ⑥ of insulator ⑤ locates in the inside key of the shell. Tighten the collet nut ① to the maximum torque of 0.5 Nm.

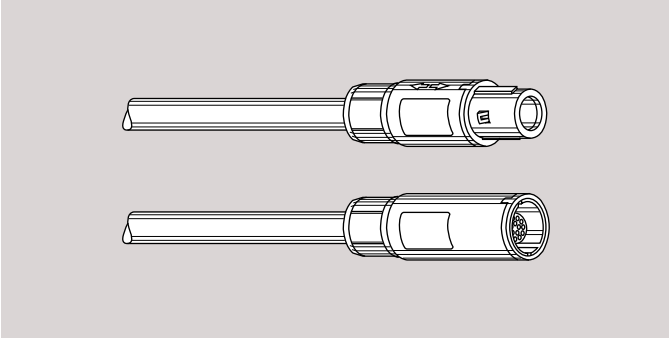

For PSU only:
We recommend ONLY the use of VTVC-6 Clear Vibra-tite or ThreeBond 1401 to secure the connector backnut. The use of other materials could result in damage to the connector.
The only recommended chemical cleaner is Isopropyl Alcohol.

Assembly instructions for watertight models

Solder contacts

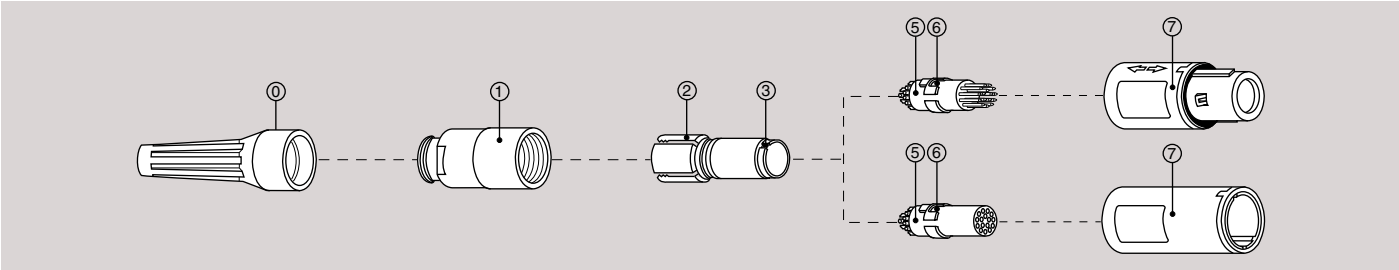

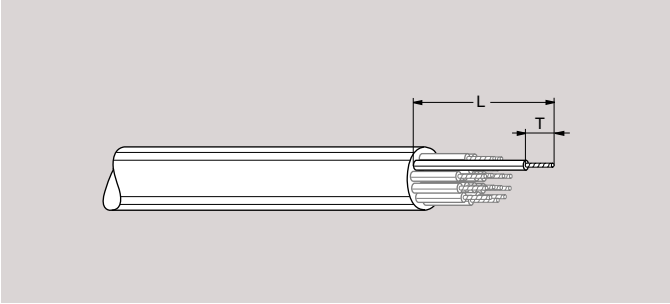

1. Strip the cable according to the lengths given in the table. Tin the conductors.

Configuration	Dimensions (mm)	
	L	T
M02	19.0	4.0
M03	19.0	3.5
M04, M05, M06, M07	18.0	3.5
M08, M10, M12, M16, M19	17.0	3.0
M26, M32	17.0	2.5

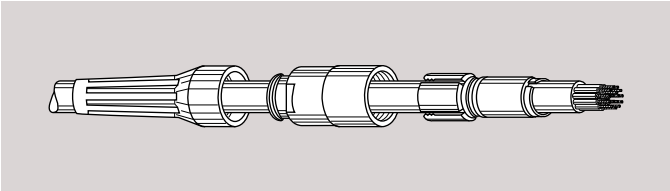

2. Slide the bend relief ⓪ , the collet nut ① and then the collet ② onto the cable.

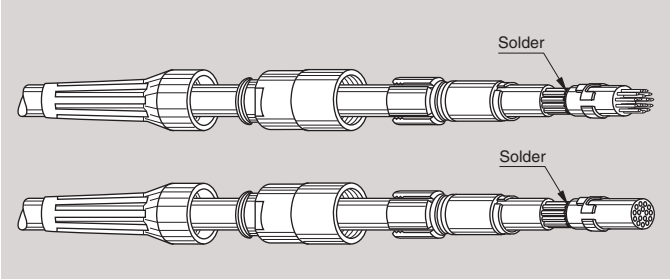

3. Solder conductors into contacts, making sure that neither solder nor flux gets onto the insulator or cable insulation.
   Fill up completely the inside of the collet ② and the gap between conductors with the adhesive/sealant DOW CORNING type 3145RTV.

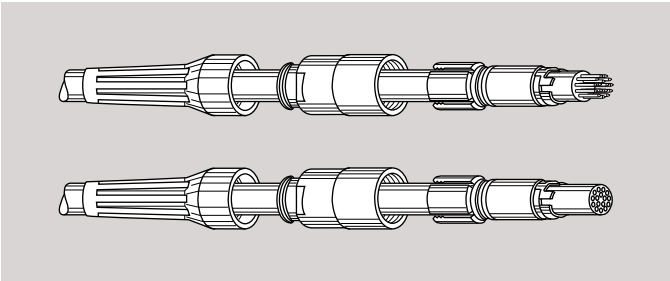

4. Slide the collet ② forward and locate slot ③ in the key of the insu-lator ⑤.
   Slide collet nut ① over collet ② and then push the whole assembly into the shell ⑦ whilst positioning it to ensure that the slot ⑥ of insulator ⑤ locates in the inside key of the shell.
   Tighten the collet nut ① to the maximum torque of 0.5 Nm.
   Push the bend relief ⓪ onto the collet nut ①.

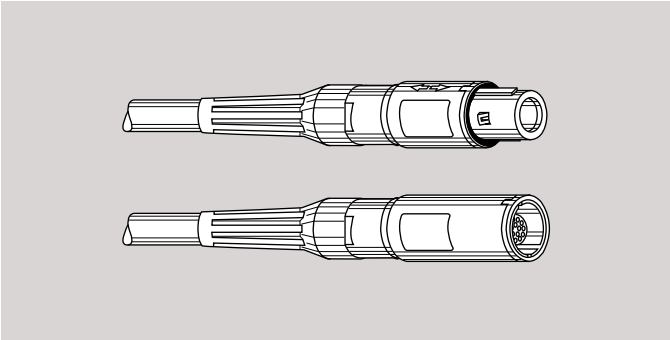

For PSU only:
We recommend ONLY the use of VTVC-6 Clear Vibra-tite or ThreeBond 1401 to secure the connector backnut. The use of other materials could result in damage to the connector.
The only recommended chemical cleaner is Isopropyl Alcohol.

Crimp contacts

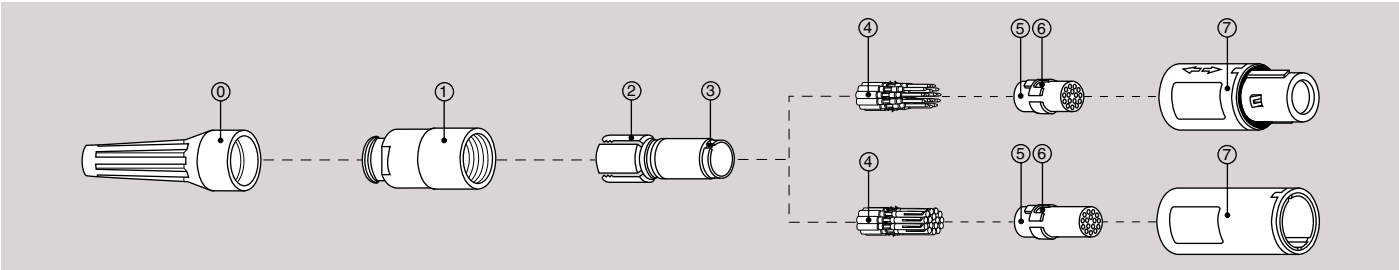

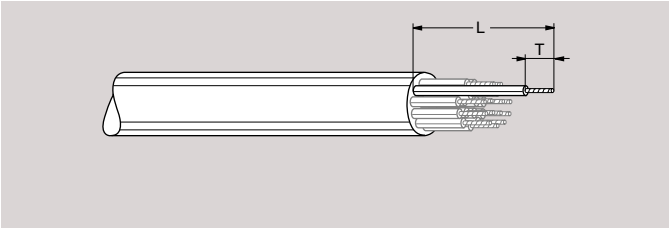

1. Strip the cable according to the lengths given in the table.

Configuration	Dimensions (mm)	
	L	T
M02	17.0	5.5
M03	17.0	5.5
M04, M05, M06, M07	15.0	4.0
M08, M10, M12	15.0	4.0
M16, M19	15.0	4.0

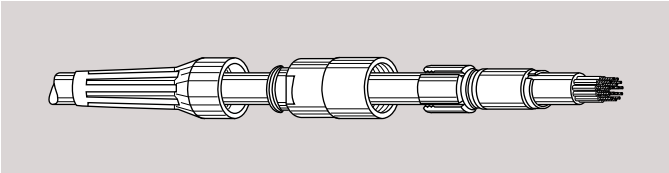

2. Slide the bend relief ⓪ , the collet nut ① and then the collet ② onto the cable.

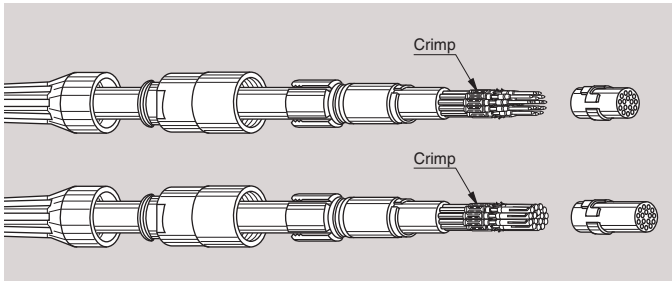

3. Fix the appropriate positioner (table page 45) in the crimping tool. Set selector to the number corresponding to the conductor AWG as indicated on the positioner label. Fit conductor into contact ④ and make sure it is visible through the inspection hole in the crimp barrel. Slide conductor-contact combination into the open crimping tool; make sure that the contact is fully pushed into the positioner. Close the tool. Remove from crimping tool and check that conductor is secure in contact and shows in inspection hole.

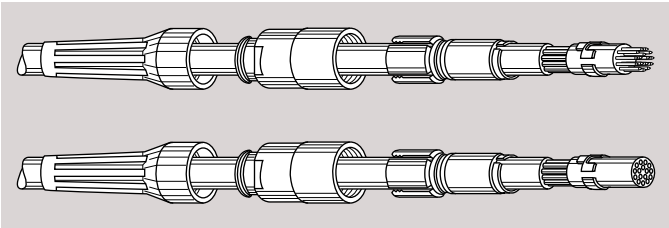

4. Now arrange contact-conductor combinations according to the insert marking and locate them into the insert ⑥. Check that all contacts are correctly located and remain in position when given a gentle pull.

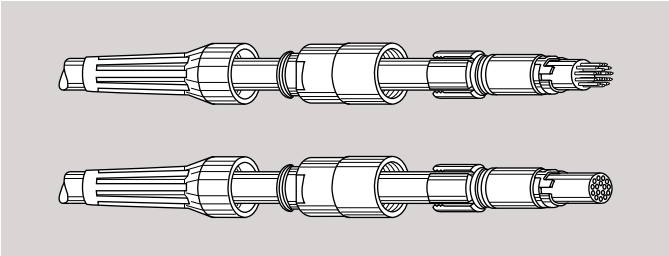

5. Slide the collet ② forward and locate slot ③ in the key of the insulator ④. Slide collet nut ① over collet ② and then push the whole assembly into the shell ⑦ whilst positioning it to ensure that the slot ⑤ of insulator ④ locates in the inside slot of the shell. Tighten the collet nut ① to the maximum torque of 0.5 Nm.
   Push the bend relief ⓪ onto the collet nut ①.

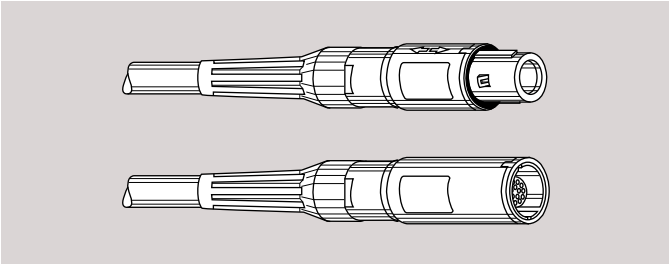

For PSU only:
We recommend ONLY the use of VTVC-6 Clear Vibra-tite or ThreeBond 1401 to secure the connector backnut. The use of other materials could result in damage to the connector.
The only recommended chemical cleaner is Isopropyl Alcohol.

Exploded view of the REDEL 3P

Straight plug

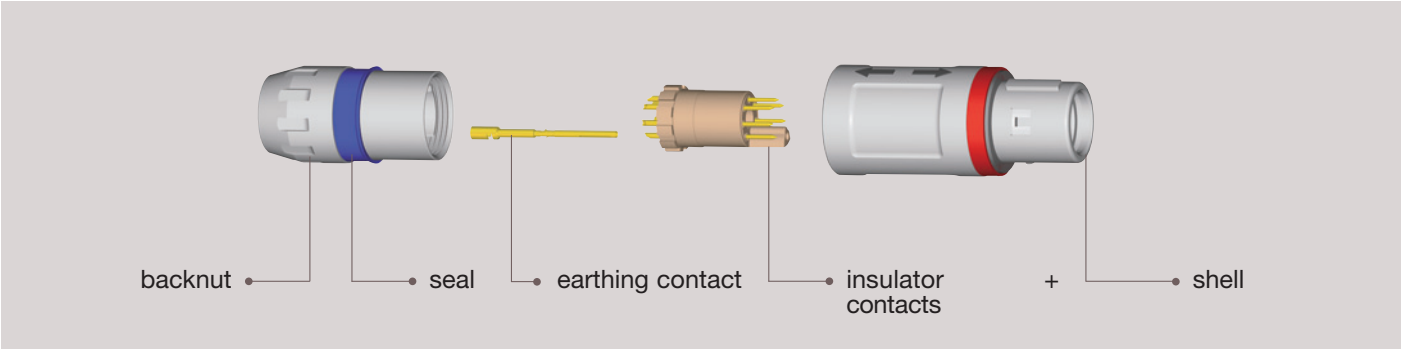

Fixed socket

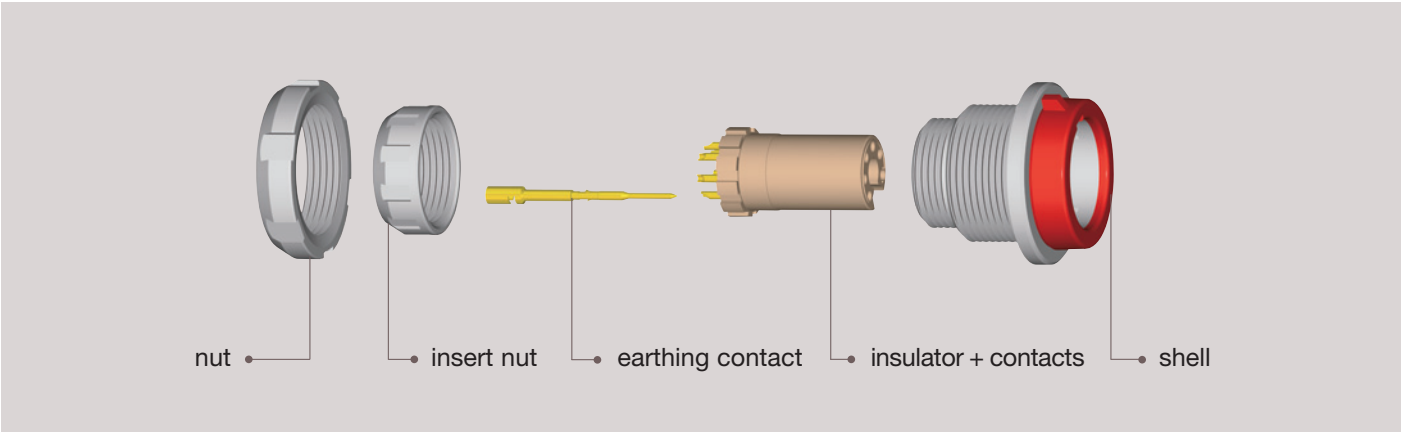

Fixed socket with square flange

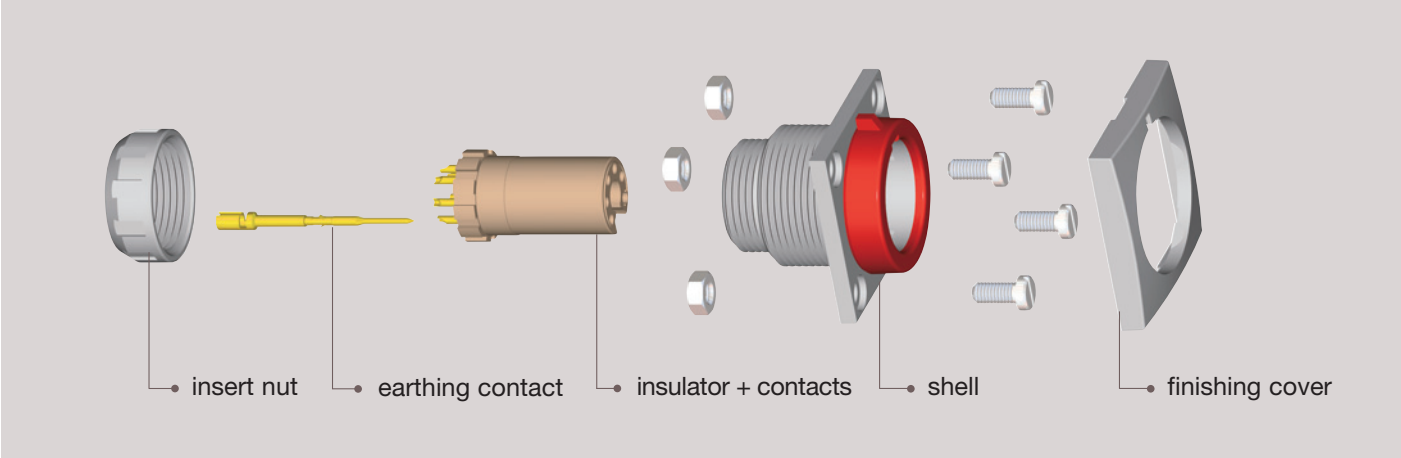

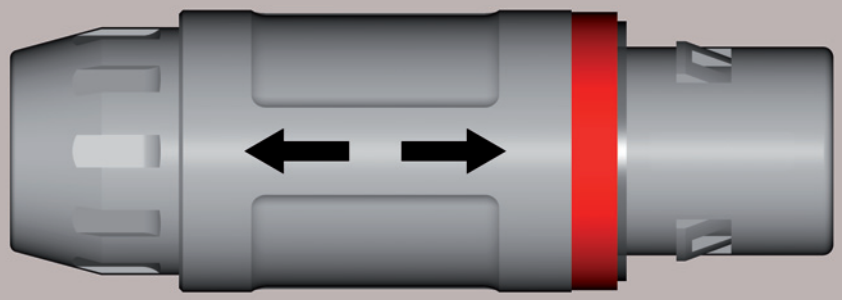

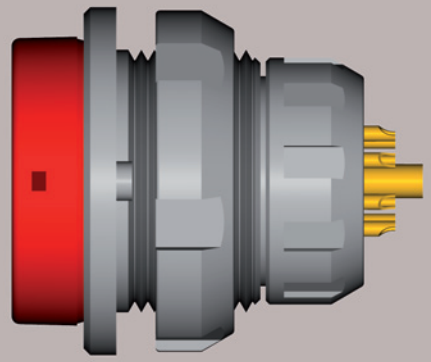

3P SERIES

3P Series

Historically the 3P is LEMO's first series of completely plastic connectors. It is designed to accommodate cable diameters up to 9.5 mm. Available in 11 different contact configurations including multicontact, and hybrid HV/electrical; coax/electrical; fibre optic/electrical, fluidic, the 3P series has been specifically designed for all applications requiring minimum weight, maximum electrical insulation values, and high thermal and mechanical properties, as well as suitability for either vapour or gas sterilization and for cold sterilization with a chemical product.These connectors provide remarkable safety by using nonconductive materials and four different systems to prevent accidental cross-mating, i. e. colour coding, housing keying, insert keying and insert polarization.

Standard models

Straight plug

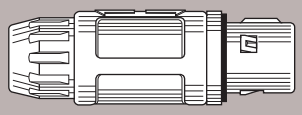

FGG

Fixed sockets

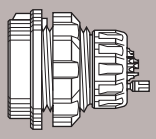

EGG

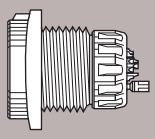

EBG

Free socket

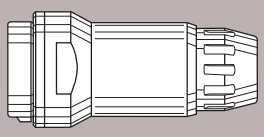

PHG

Alignment keys and insert polarization

The 3P series makes it possible for the user to configure his own keying system.
The insert can be located into 11 different angular positions relative to the external alignment key.

Rear view of a socket

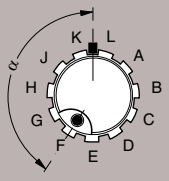

Insert code	Angle	
	Plug	Socket
A	180°	180°
B	147° 16'	212° 44'
C	114° 33'	245° 27'
D	81° 49'	278° 11'
E	49° 05'	310° 55'
F	16° 22'	343° 38'
G	343° 38'	16° 22'
H	310° 55'	49° 05'
J	278° 11'	81° 49'
K	245° 27'	114° 33'
L	212° 44'	147° 16'

Note: the reference letter:
- on the plug insert, is placed to the left of the alignment key.
- on the socket insert, is placed to the right of the alignment key.

Part numbering system

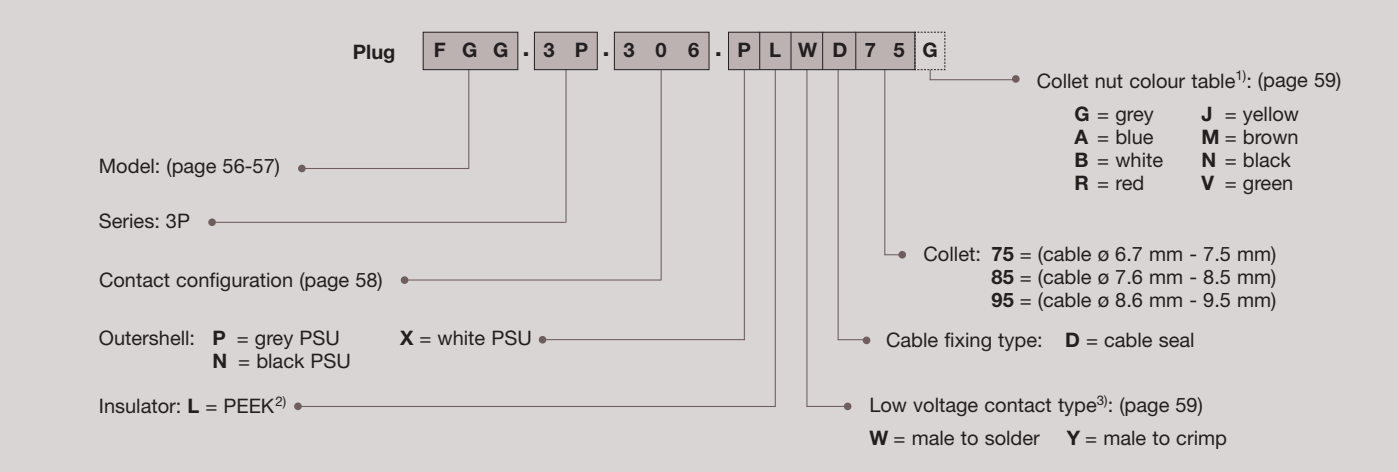

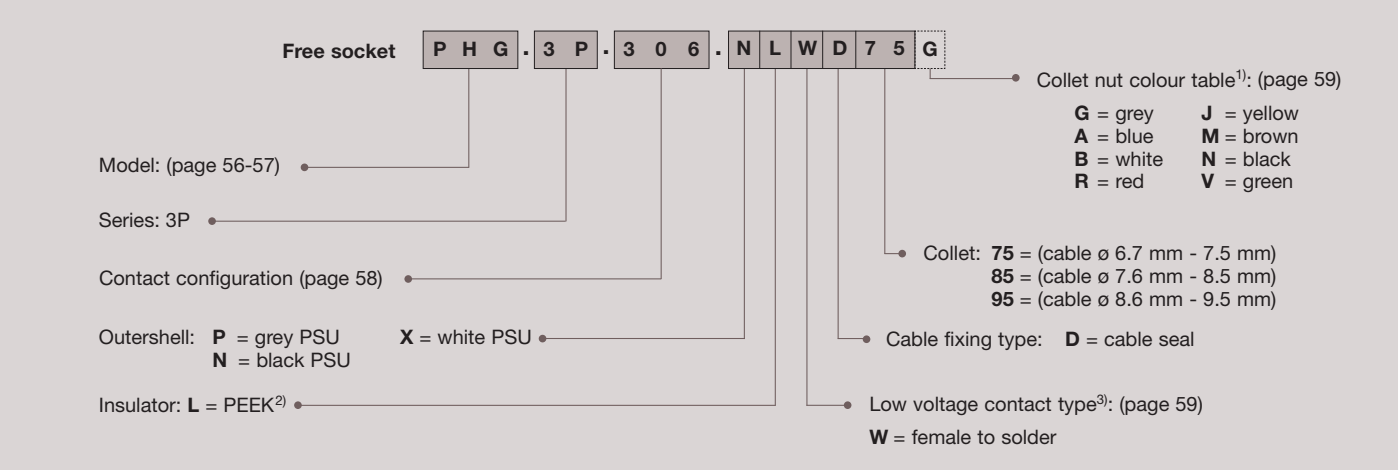

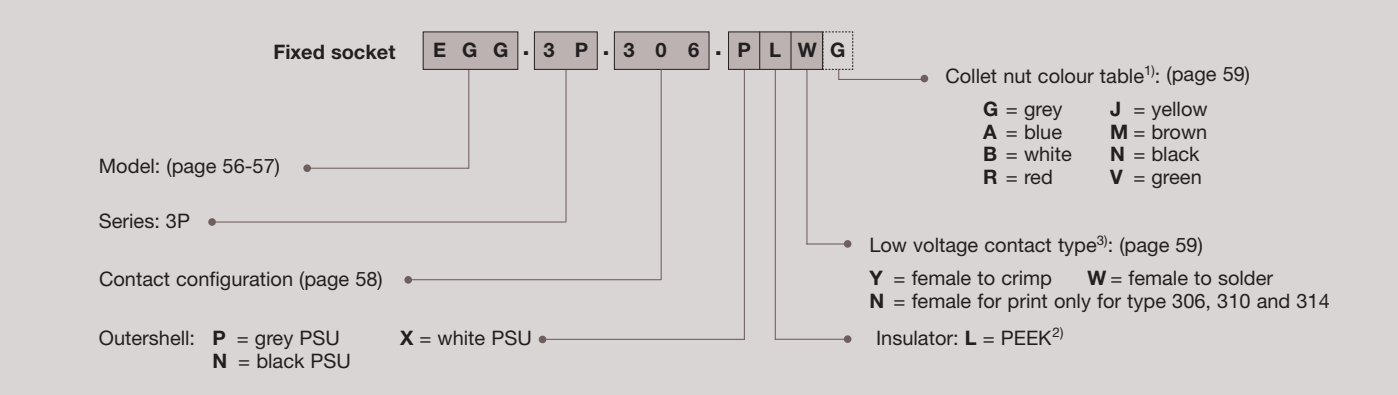

FGG.3P.306.PLWD75G Straight plug with key and cable seal, 3P series, multipole type with 6 contacts, outer shell in grey PSU, PEEK insulator, male solder contact, D type collet for 6.7 mmm to 7.5 mm diameter cable and grey coloured ring.

PHG.3P.310.NLWD75G Free socket with key and cable seal, 3P series, multipole with 6 contacts, outer shell in black PSU, PEEK insulator, female solder contact, D type collet for 6.7 mm to 7.5 mm diameter cable and grey coloured ring.

EGG.3P.306.PLWG Fixed socket with key, 3P series, multipole type with 6 contacts, outer shell in grey PSU, PEEK insulator, female solder contact and grey coloured ring.

Note: 1) the variant position of the part number is used to specify the colour of the coloured ring. For grey PSU (material Code P).
2) for the high voltage type «709» use «J» enhanced PEEK material code. The standard colour is grey and nothing is mentionned in the variant position.
3) the letters W or Y are also used for special arrangements.

Standard models (IP61)

| | | |

EGG Fixed socket with key, nut fixing

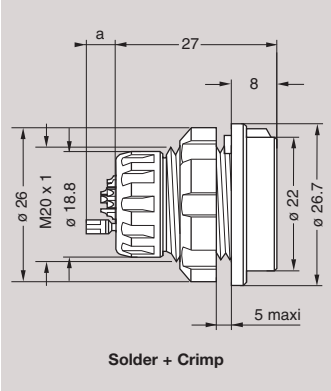

Solder + Crimp

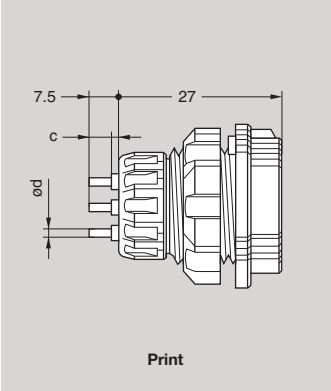

Print

Part Number	number of contacts	Contact					
		Solder		Crimp		Print	
		N	a max	N	a	c	ø d
EGG.3P.306.PLWG	6+1LV	27	4.7	27	4.7	5.5	0.7
EGG.3P.310.PLWG	10+1LV	27	4.7	27	4.7	5.5	0.7
EGG.3P.314.PLWG	14+1LV	27	4.7	27	4.7	5.5	0.7
EGG.3P.318.PLWG	18+1LV	27	4.7	27	4.7	-	-

Note: for PCB drilling pattern see page 65.
Panel hole see page 65.

EBG Fixed socket with key, square flange and screw fixing

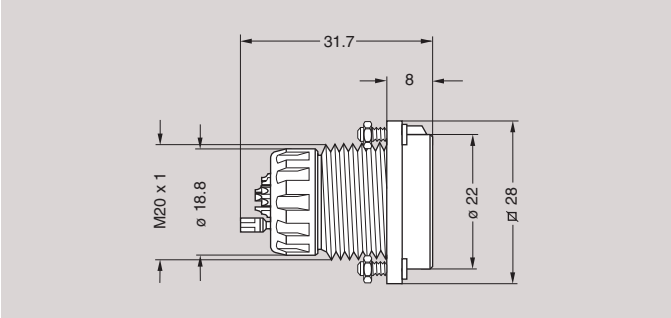

Part Number
EBG.3P.306.PLWG
EBG.3P.310.PLWG
EBG.3P.314.PLWG

Note: for PCB drilling pattern see page 65.
Panel hole see page 65.

PHG Free socket with key and cable seal

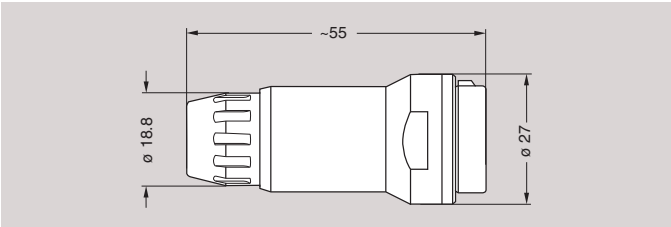

Part Number	Cable ø	
	min	max
PHG.3P.●●●.NLWD75N	6.7	7.5
PHG.3P.●●●.NLWD85N	7.6	8.5
PHG.3P.●●●.NLWD95N	8.6	9.5

Note: the picture shows outershell in black PSU.

Insert configuration

. 3 P . .

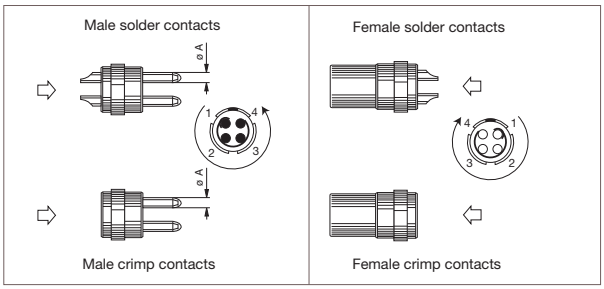

	Reference	Number of contacts	ø A (mm)	Solder bucket ø (mm)[5]	Contact type: Solder	Contact type: Crimp	Contact type: Print (straight)	Test voltage (kV rms)[1] Contact-contact	Air clearance min[2] (mm)	Creepage distance min[3] (mm)	Rated current (A)
Multipole	306	6+1 LV	0.9	0.8	●	●	●	3.9	1.95	1.95	6.0
	310	10+1 LV	0.9	0.8	●	●	●	3.3	1.25	1.25	5.0
	314	14+1 LV	0.9	0.8	●	●	●	1.7	0.90	0.90	4.0
	318	18+1 LV	0.7	0.6	●	-	-	2.7	0.70	0.70	3.0
H.V. Hybrid +LV	709	9+1 LV 1 HV	0.9	0.8	●	●	-	1.7	0.90	0.90	4.0
Coaxial Hybrid +LV	809	9+1 LV 1 Coax[6]	0.9	0.8	●	●	-	1.7	0.90	0.90	4.0
Fibre optic Hybrid +LV	92H	9+1 LV 1 FO[4]	0.9	0.8	●	●	-	1.7	0.90	0.90	4.0
	92K	11+1 LV 1 FO[4]	0.7	0.6	●	-	-	2.7	0.75	0.75	3.0
	96H	9+1 LV 1 FO[4]	0.9	0.8	●	●	-	1.7	0.90	0.90	4.0
	96K	11+1 LV 1 FO[4]	0.7	0.6	●	-	-	2.7	0.75	0.75	3.0
Fluidic Hybrid +LV	033	3 Fluid. + 3 LV	0.9	-	-	●	-	3.0	1.45	1.45	9.0

Note: 1) depending on specific application and related standard, more restrictive operating voltage may apply.
We suggest operating voltage = 1/3 test voltage, see page 68.
2) shortest distance in air between two conductive parts.
3) shortest distance along the surface of the insulating material between two conductive parts.
4) fibre optic contact must be ordered seperately (see page 61)
5) for a given AWG, the diameter of some stranded conductor design is larger than the solder cup diameter (see page 69).
6) configuration 809 use «C» type coaxial contact.

Contact type

Select the type of contact: solder or crimp?

Plug

Type	Male
solder	W
crimp	Y

Socket

Type	Female
solder	W
crimp	Y
print	N

When should I use crimp rather than solder contacts ?

Soldering

- recommended for small volumes
- requires little amount of tooling (soldering iron)
- requires more time

Crimping

- recommended for large volumes
- no heat is required to make the connection
- for contacts with high density
- for use in high temperature environment
- requires extra tooling (crimping tools)

Colour coding

	Colours							
	grey	blue	yellow	black	red	green	brown	white
Reference	G	A	J	N	R	V	M	B
RAL code	7001	5002	1016	9005	3020	6024	8002	9003

Note: the RAL colours are indicative and depend on raw material and production process. Colour may differ.

Easy identification with the assistance of colour coding. Outershell is only available in grey, black or white (see page 55).

Accessories

FGG-EGG Insulator for crimp contacts

male

female

Contact configuration	Insulator part number	
	For plug	For socket
306	FGG.3P.306.ML	EGG.3P.406.ML
310	FGG.3P.310.ML	EGG.3P.410.ML
314	FGG.3P.314.ML	EGG.3P.414.ML

FGG-EGG Crimp contacts, kit with the number of contacts in a tube

Contact configuration	ø A (mm)	ø C (mm)	Contact part number	
			Male	Female
306	0.9	1.1	FGG.3P.306.ZZYT	EGG.3P.306.ZZYT
310	0.9	1.1	FGG.3P.310.ZZYT	EGG.3P.310.ZZYT
314	0.9	1.1	FGG.3P.314.ZZYT	EGG.3P.314.ZZYT

FGG-EGG Earthing contacts

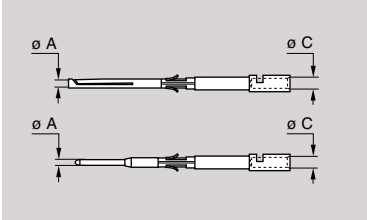

Type	ø A (mm)	ø C (mm)	Contact part number	
			Male	Female
306 - 310	0.9	2.0	FGG.3P.561.ZZY	EGG.3P.661.ZZY
314 - 318	0.9	2.0	FGG.3P.561.ZZY	EGG.3P.661.ZZY
709 - 809	0.9	2.0	FGG.3P.561.ZZY	EGG.3P.661.ZZY
96H - 92H	0.9	2.0	FGG.3P.561.ZZY	EGG.3P.661.ZZY
96K - 92K	0.9	2.0	FGG.3P.561.ZZY	EGG.3P.661.ZZY

GEB Plastic nut

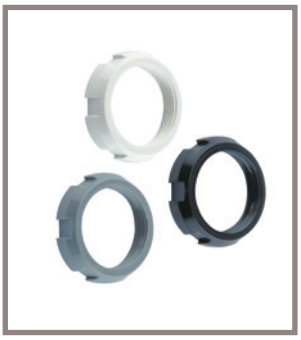

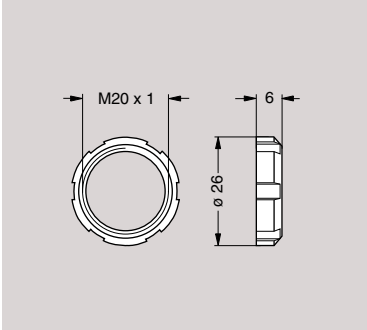

Part Number	Mat.	Colours
GEB.3P.240.UB	PSU	white
GEB.3P.240.UG	PSU	grey
GEB.3P.240.UN	PSU	black

EBG Finishing cover

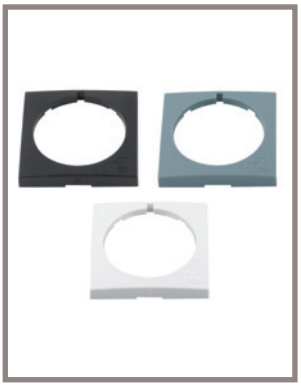

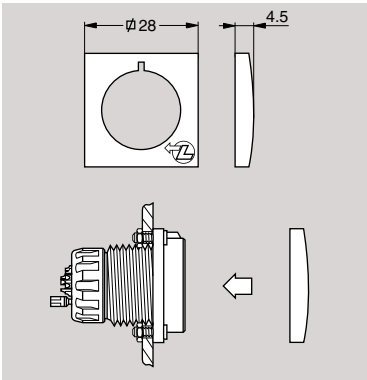

Part Number	Mat.	Colours
EBG.3P.260.UB	PSU	white
EBG.3P.260.UG	PSU	grey
EBG.3P.260.UN	PSU	black

Note: a finishing cover is supplied with all EBG fixed sockets with a square flange. Models EBG sockets, with a square flange, can also be mounted without using the fixing screws.

Note: all dimensions are in millimeters

GMA Bend relief

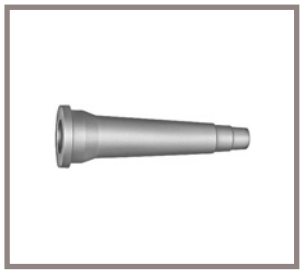

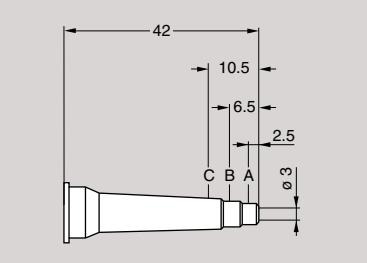

Part Number	Cut	Cable ø (mm)	
		min.	max.
GMA.3P.050.SN	–	3.0	3.9
	A	4.0	4.9
	B	5.0	5.9
	C	6.0	7.0

Material: Black thermoplastic rubber

Note: the cable entry of the FGG plugs can be fitted with a flexible bend relief which can accommodate cables of 3 to 7 mm in diameter.
The adjustment to the diameter is done by cutting the conical end. The bend relief is mounted inside the nut.
The cable must have a sheath with a large enough diameter in order to be held by the clamping system.

Fibre optic contact

For the hybrid type LV + fibre optic, fibre optic contacts must be ordered separately.

FFS.F1 Male F1 Fibre Optic Contact for plug

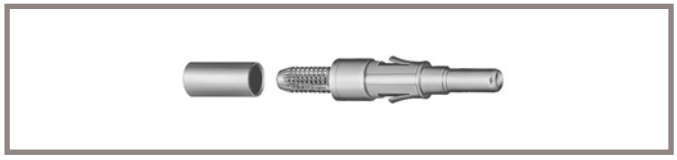

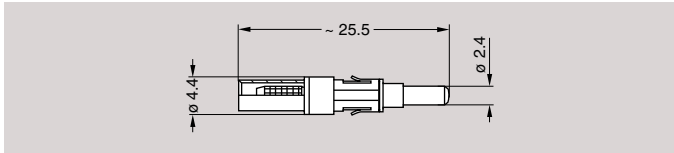

Reference	Ferrule inside ø (µm)	Fibre type
FFS.F1.GB1.ACE30	235	HCS
FFS.F1.HB1.AAE30	335	HCS
FFS.F1.JB1.AAE30	435	HCS
FFS.F1.KB1.AAE30	640	HCS
FFS.F1.RB1.AAE30	1100	Polymer

Note: other ferrule inside diameter, consult us.

PSS.F1 Female F1 Fibre Optic Contact for socket

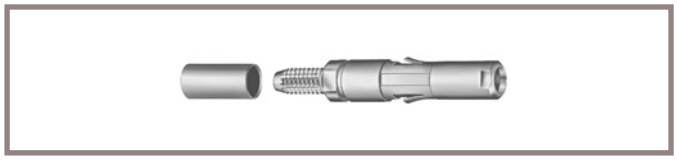

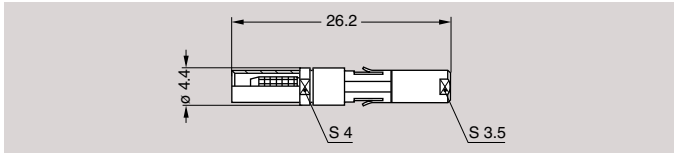

Reference	Ferrule inside ø (µm)	Fibre type
PSS.F1.GB1.ACE30	235	HCS
PSS.F1.HB1.AAE30	335	HCS
PSS.F1.JB1.AAE30	435	HCS
PSS.F1.KB1.AAE30	640	HCS
PSS.F1.RB1.AAE30	1100	Polymer

Note: other ferrule inside diameter, consult us.

FFS.F2 Male F2 Fibre Optic Contact for plug

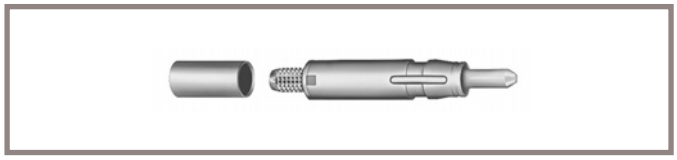

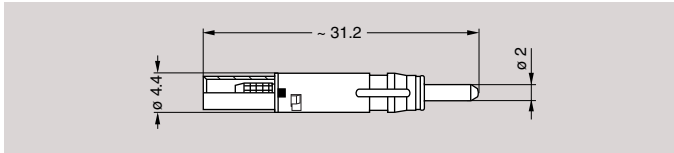

Reference	Ferrule inside ø (µm)	Fibre type
FFS.F2.BA2.LCE30	125	9/125
FFS.F2.BB2.LCE30	126	9/125
FFS.F2.BD2.LCE30	128	50/125
FFS.F2.BD2.LCE30	128	62.5/125
FFS.F2.FB2.LCE30	144	100/40

Note: all dimensions are in millimeters.

PSS.F2 Female F2 Fibre Optic Contact for socket

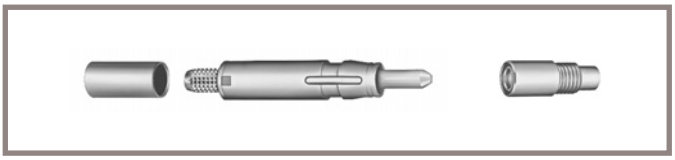

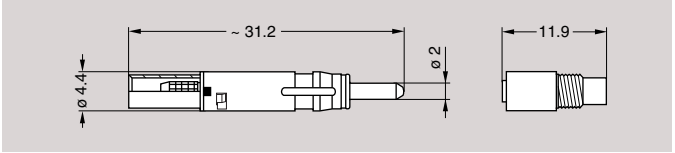

Reference	Ferrule inside ø (µm)	Fibre type
PSS.F2.BA2.LCE30	125	9/125
PSS.F2.BB2.LCE30	126	9/125
PSS.F2.BD2.LCE30	128	50/125
PSS.F2.BD2.LCE30	128	62.5/125
PSS.F2.FB2.LCE30	144	100/40

Note: all dimensions are in millimeters.

Recommended coaxial cables

Group[1)]			Type
1	2	3	
●			RG.174A/U
	●		RG.178B/U
		●	RG.179B/U
		●	RG.187A/U
●			RG.188A/U
	●		RG.196A/U
●			RG.316/U

Note: 1) the cable group number corresponding to the cable must be written in the variant position of the part number (see page 55).

Tooling

DPC.91.701.V Crimping tool

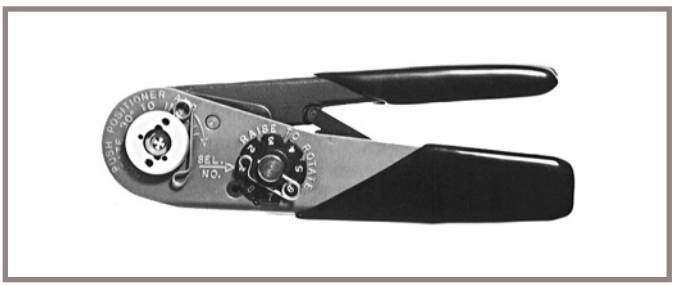

DCE Positioners for crimp contacts

male

female

DCF Automatic extraction tools for crimp contacts

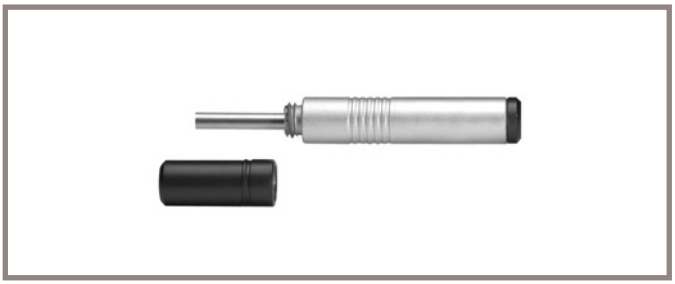

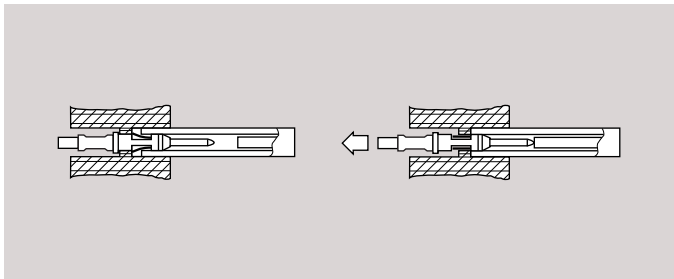

Contact type	Conductor (mm)	Contact ø AWG	Positioner part number		Selector No Setting	Part number extractor
			Male	Female		For male contact and female contact
306	0.9	20-22-24	DCE.91.093.PVC	DCE.91.093.PVM	6-5-5	DCF.91.093.5LT
310	0.9	20-22-24	DCE.91.093.PVC	DCE.91.093.PVM	6-5-5	DCF.91.093.5LT
314	0.9	20-22-24	DCE.91.093.PVC	DCE.91.093.PVM	6-5-5	DCF.91.093.5LT

Note: this model is used for male and female contacts.
The variance in conductor stranding diameter for the minimum AWG is such that some can have a cross section which is not sufficient to guarantee crimping as per IEC 60352-2 standard. All dimensions are in millimeters.

DCC Extraction tool for coax contact type «C»

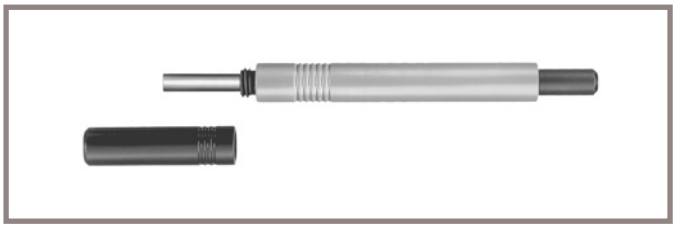

Part Number	Contact type
DCC.91.384.5LA	809

DPE Crimping tool for coax contact type «C»

Part Number	Cable group
DPE.99.103.8K	1-3
DPE.99.103.1K	2

DCP.91.019.HN Spanners with notch for securing the collet nut

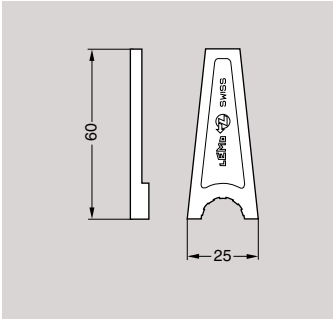

Material: Black polyamide

DCP.91.026.HN Spanners for securing the socket nut

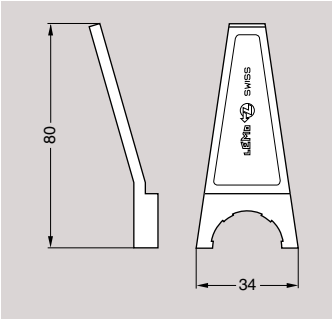

Material: Black polyamide

DCS Polishing tool for fibre optic contact

Part Number	Contact type
DCS.91.F24.LC	F2
DCS.91.F13.LC	F1

Note: all dimensions are in millimeters.

DRV.91.CF2.PN F2 contact fibre optic work station

DPE.99.524.337K Crimp tool for fibre optic contact F1 and F2 type

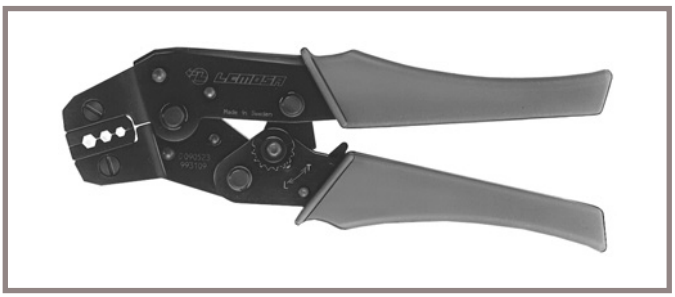

DCC.91.312.5LA Extraction/Installation tool for fibre optic contact F1 and F2 type

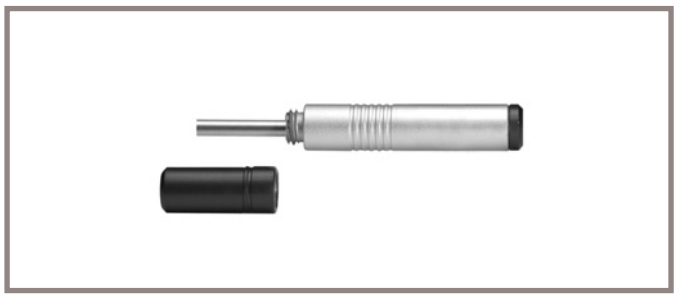

DCS Microscope adaptor for fibre optic contact

Part Number	Contact type
DCS.91.G90.6E200	F2
DCS.91.G90.6E240	F1

WST Epoxy curing oven for fibre optic contact

Part Number	Voltage
WST.FR.220.VA	220 volts
WST.FR.110.VA	110 volts

WST.FB.G00.301 Fibre inspection microscope

DCS.91.F23.LA Cleaning tool for F2 contact

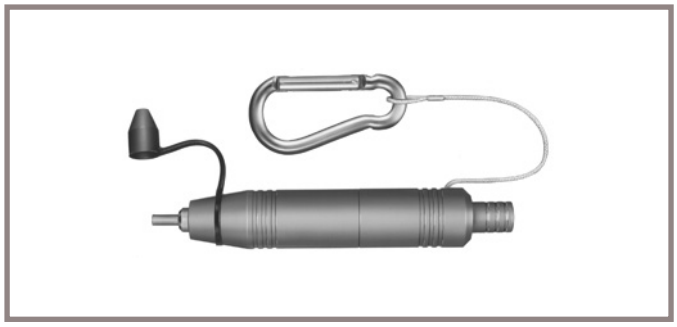

DCS.F2.035.PN F2 contact alignment device installation/extraction tool

Panel hole

For EGG

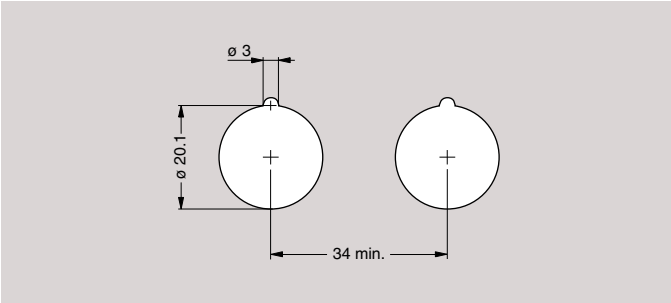

For EBG

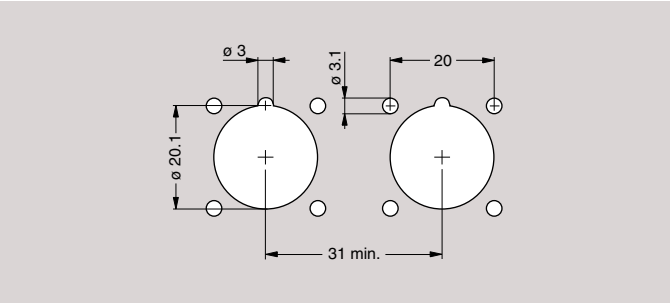

PCB drilling pattern

For straight contacts

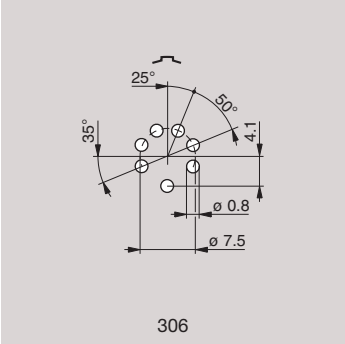

306

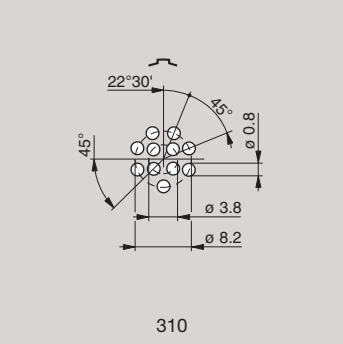

310

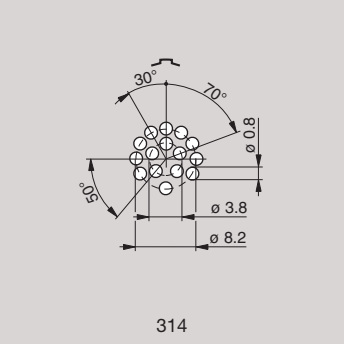

314

Assembly instructions

Solder LV contacts

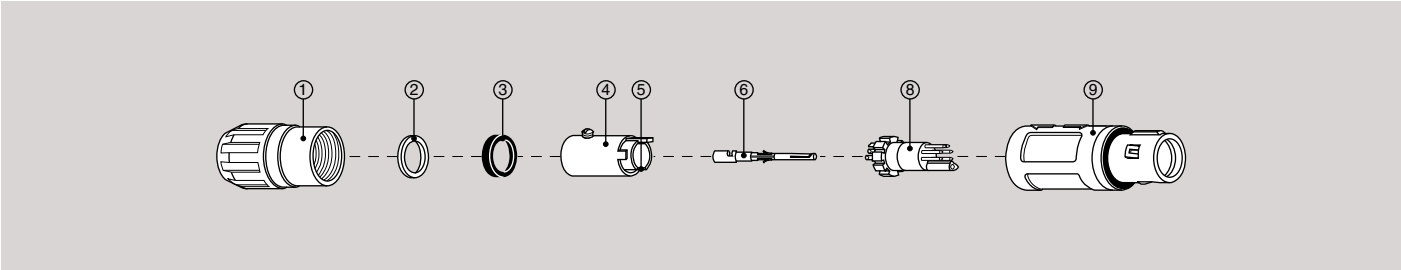

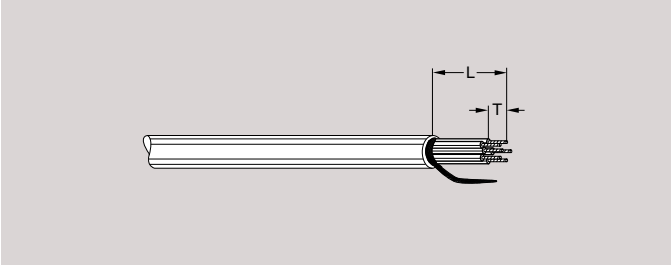

1. Strip the cable according to the lengths given in the table. Tin the conductors. In case of a screened cable separate the braid and twist it apart as shown.

Configuration	Dimensions (mm)	
	L	T
306 - 310	13.0	3.0
314 - 318	13.0	3.0

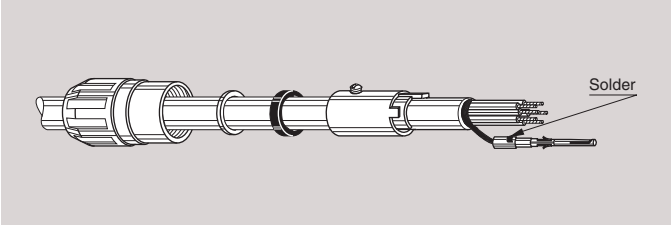

2. Slide the retaining nut ①, the washer ②, the seal ③ and the clamping sleeve ④. In case of a screened cable solder the braid into the earthing contact ⑥.

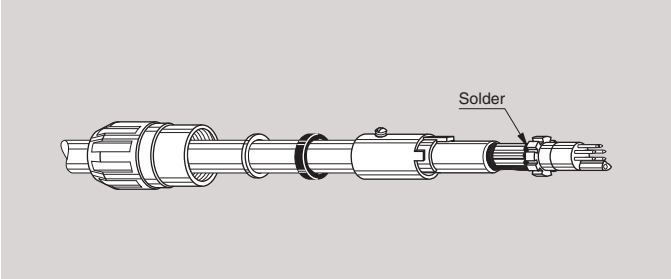

3. In case of a screened cable introduce the earthing contact ⑥ into the insert ⑧. Check that contact is correctly located and remains in position when given a gentle pull.
   Solder conductors into contacts, making sure that neither solder nor flux gets onto the insulator or cable insulation.

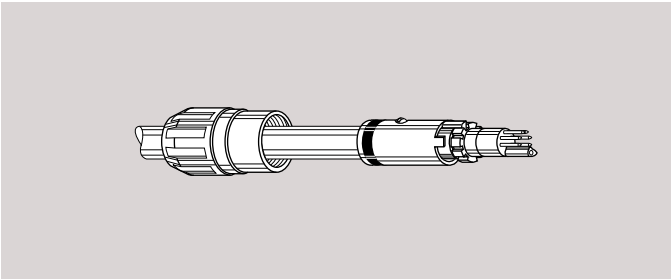

4. Slide the clamping sleeve ④ forward and locate tag ⑤ into one of the insulator slot according to the selected polarization code. Make sure that same code is used for plug and socket.
   Tight the screw of the clamping sleeve ④ to secure the cable. Slide washer and seal against clamping sleeve.

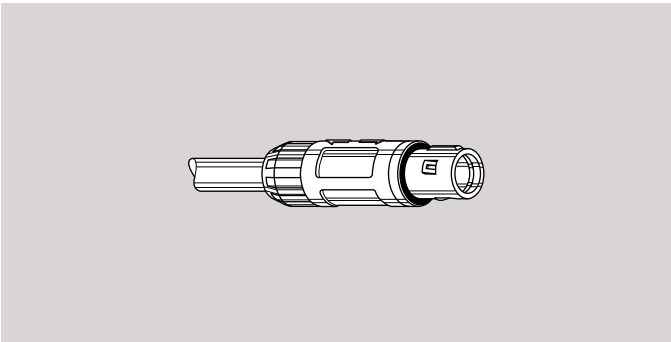

5. Push the whole assembly into the shell ⑨ whilst turning it to insure that the tag ⑤ is correctly located in the inside slot of the shell. Tighten the retaining nut ① to the maximum torque of 1.2 Nm.

   – Socket mounting nut or screws = 2.3 Nm.

For PSU only:
We recommend ONLY the use of VTVC-6 Clear Vibra-tite or ThreeBond 1401 to secure the connector backnut. The use of other materials could result in damage to the connector.
The only recommended chemical cleaner is Isopropyl Alcohol.

Crimp LV contacts

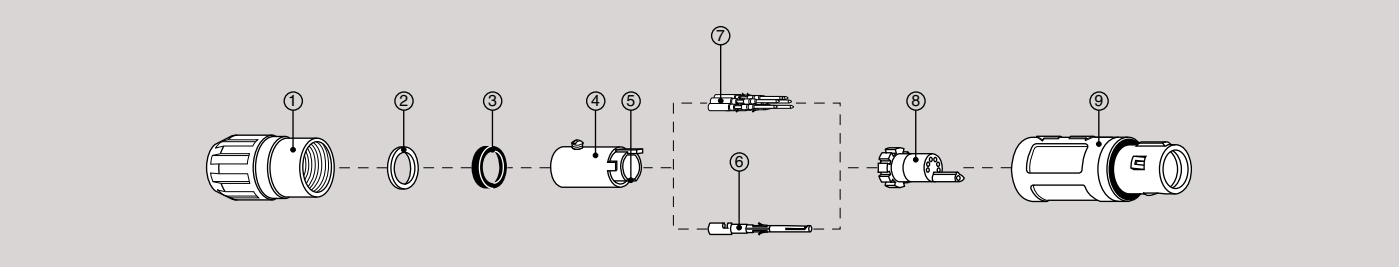

1. Strip the cable according to the lengths given in the table. Tin the conductors. In case of a screened cable separate the braid and twist it apart as shown.

Configuration	Dimensions (mm)	
	L	T
306, 310, 314	19.0	5.4

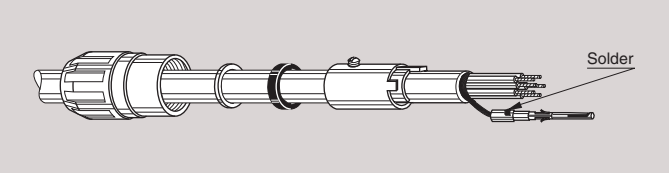

2. Slide the retaining nut ①, the washer ②, the seal ③ and the clamping sleeve ④.
   In case of a screened cable solder the braid into the earthing contact ⑥.

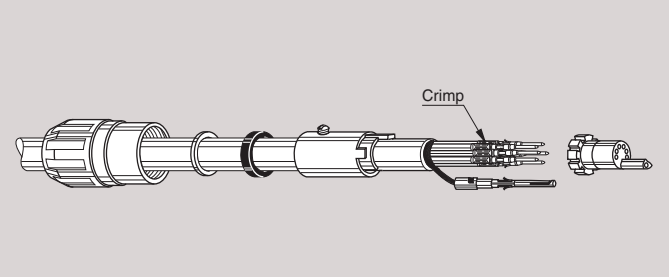

3. Fix the appropriate positioner (table page 51) in the crimping tool. Set selector to the number corresponding to the conductor AWG as indicated on the positioner label. Fit conductor into contact ⑦ and make sure it is visible through the inspection hole in the crimp barrel. Slide conductor-contact combination into the open crimping tool; make sure that the contact is fully pushed into the positioner. Close the tool. Remove from crimping tool and check that conductor is secure in contact and shows in inspection hole.

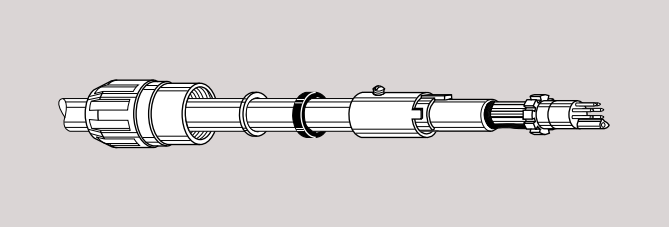

4. Now arrange contact-conductor combinations according to the insert marking and locate them into the insert ⑤. Check that all contacts are correctly located and remain in position when given a gentle pull. In case of a screened cable introduce the earthing contact ⑥ into the insert ⑧. Check that contact is correctly located and remains in position when given a gentle pull.

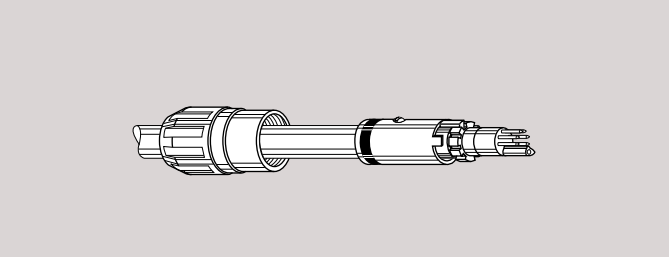

5. Slide the clamping sleeve ④ forward and locate tag ⑤ into one of the insulator slot according to the selected polarization code. Make sure that same code is used for plug and socket.
   Tight the screw of the clamping sleeve ④ to secure the cable. Slide washer and seal against clamping sleeve.

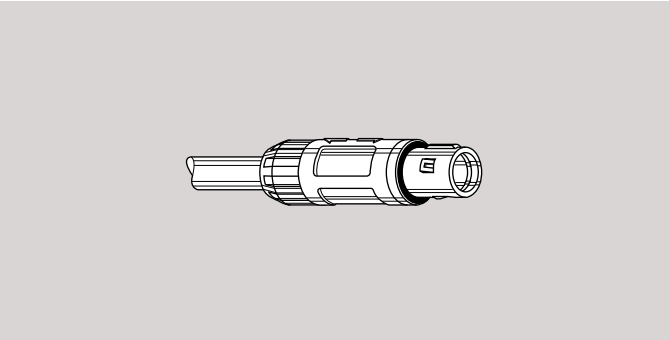

6. Push the whole assembly into the shell ⑨ whilst turning it to insure that the tag ⑤ is correctly located in the inside slot of the shell. Tighten the retaining nut ① to the maximum torque of 1.2 Nm.

   – Socket mounting nut or screws = 2.3 Nm.

For PSU only:
We recommend ONLY the use of VTVC-6 Clear Vibra-tite or ThreeBond 1401 to secure the connector backnut. The use of other materials could result in damage to the connector.
The only recommended chemical cleaner is Isopropyl Alcohol.

Mechanical latching characteristics

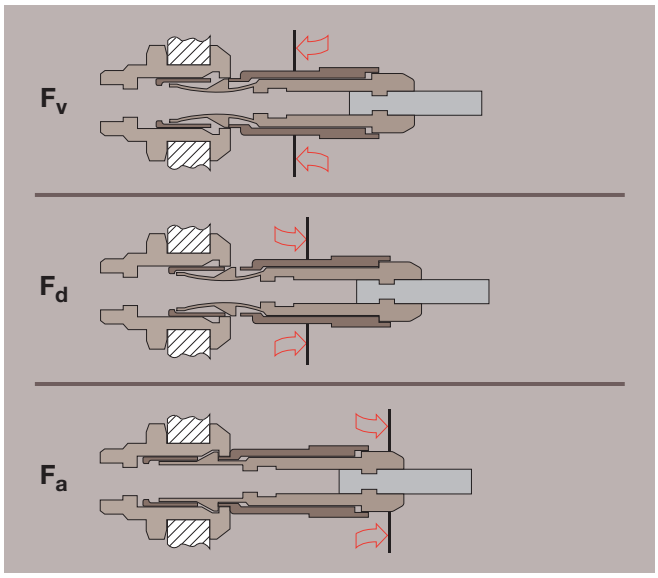

F_v: average latching force

F_d: average unmating force with axial pull on the outer release sleeve

F_a: average retention force for straight pull on the collet nut

PSU shell material

Force (N)	Series		
	1P	2P	3P
Fv	8.0	5.5	7.5
Fd	8.0	8.5	17.0
Fa	100	150	120

PEI shell material

Force (N)	Series	
	1P	2P
Fv	6.5	6.0
Fd	6.5	9.0
Fa	120	100

Notes: 1N = 0.102 kg.
Mechanical endurance: 1000 cycles.

Notes: The forces were measured on PSU outer shells not fitted with contacts. The mechanical endurance represents the number of cycles after which the latching system is still effective (1 cycle = 1 latching/unlatching – 300 cycles per hour). The values were measured according to the standard IEC 60512-7, test 13a.

Contact resistance with relation to the number of mating cyles

(measured according to IEC 60512-2 test 2a)

Average values measured after the mating cycles and the salt spray test according to IEC 60512-6 test 11f.

A ø (mm)	Contact resistance (mΩ)
	1000 cycles
0.5	< 8.5
0.7	< 6.5
0.9	< 4.5
1.3	< 2.8
1.6	< 2.9
2.0	< 2.6

Note: 1) 21 days at 95% RH according to IEC 60068-2-3.

Insulation resistance between the contacts and contact/shell

(measured according to IEC 60512-2 test 3a)

Insulating material	Multipole
	PEEK
new	> 10^{12} Ω
after humidity test[1)]	> 10^{10} Ω

Test voltage

Test voltage (Ue) :
(measured according to the IEC 60512-2 test 4a standard)

It corresponds to 75% of the mean breakdown voltage.
Test voltage is applied at 500 V/s and the test duration is 1 minute.

This test has been carried out with a mated plug and socket, with power supply only on the plug end.

Operating voltage (Us) :
It is proposed according to the following ratio : $Us = \frac{Ue}{3}$

Caution:
For a number of applications, safety requirements for electrical appliances are more severe with regard to operating voltage.
In such cases operating voltage is defined according to creepage distance and air clearance between live parts.
Please consult us for the choice of a connector by indicating the safety standard to be met by the product.

Technical tables

Table of American Wire Gauge

AWG	Construction		ø wire max		Wire section	
	Strand nb	AWG/ strand	(mm)	(in)	(mm^2)	(sq in)
0	259	24	11.277	0.444	52.90	0.0820
1	817	30	9.702	0.382	41.40	0.0641
2	259	26	8.89	0.35	33.20	0.0514
4	133	25	6.9596	0.274	21.5925	0.0335
6	133	27	5.5118	0.217	13.5885	0.0211
8	168	30	4.4450	0.175	8.5127	0.0132
8	133	29	4.3942	0.173	8.6053	0.0133
10	105	30	3.3020	0.13	5.3204	0.0082
10	37	26	2.9210	0.115	4.7397	0.0073
10	1	10	2.6162	0.103	5.2614	0.0082
12	37	28	2.3114	0.091	2.9765	0.0046
12	19	25	2.3622	0.093	3.0847	0.0048
12 1)	7	20	2.5400	0.10	3.6321	0.0056
12	1	12	2.0828	0.082	3.3081	0.0051
14	41	30	2.0574	0.081	2.0775	0.0032
14	19	27	1.8542	0.073	1.9413	0.0030
14 1)	7	22	2.0828	0.082	2.2704	0.0035
14	1	14	1.6510	0.065	2.0820	0.0032
16 1)	65	34	1.5748	0.062	1.3072	0.0020
16	26	30	1.5748	0.062	1.3174	0.0020
16	19	29	1.4986	0.059	1.2293	0.0019
16 1)	7	24	1.5494	0.061	1.4330	0.0022
16	1	16	1.3208	0.052	1.3076	0.0020
18 1)	65	36	1.2700	0.05	0.8234	0.0013
18 1)	42	34	1.2700	0.05	0.8447	0.0013
18	19	30	1.3208	0.052	0.9627	0.0015
18	16	30	1.2954	0.051	0.8107	0.0013
18	7	26	1.2700	0.05	0.8967	0.0014
18	1	18	1.0414	0.041	0.8229	0.0013
20 1)	42	36	1.0160	0.04	0.5320	$8.2x10^{-4}$
20	19	32	1.0414	0.041	0.6162	0.0010
20	10	30	1.0160	0.04	0.5067	$7.9x10^{-4}$
20	7	28	0.9906	0.039	0.5631	$8.7x10^{-4}$
20	1	20	0.8382	0.033	0.5189	$8.0x10^{-4}$
22	19	34	0.8382	0.033	0.3821	$5.9x10^{-4}$
22	7	30	0.7874	0.031	0.3547	$5.5x10^{-4}$
22	1	22	0.6604	0.026	0.3243	$5.0x10^{-4}$
24 1)	42	40	0.6604	0.026	0.2045	$3.2x10^{-4}$
24	19	36	0.6858	0.027	0.2407	$3.7x10^{-4}$
24	7	32	0.6350	0.025	0.2270	$3.5x10^{-4}$
24	1	24	0.5588	0.022	0.2047	$3.2x10^{-4}$
26	19	38	0.5588	0.022	0.1540	$2.4x10^{-4}$
26	7	34	0.5080	0.02	0.1408	$2.2x10^{-4}$
26	1	26	0.4318	0.017	0.1281	$2.0x10^{-4}$
28 1)	19	40	0.4318	0.017	0.0925	$1.4x10^{-4}$
28	7	36	0.4064	0.016	0.0887	$1.4x10^{-4}$
28	1	28	0.3302	0.013	0.0804	$1.2x10^{-4}$
30	7	38	0.3302	0.013	0.0568	$8.8x10^{-5}$
30	1	30	0.2794	0.011	0.0507	$7.9x10^{-5}$
32	7	40	0.2794	0.011	0.0341	$5.3x10^{-5}$
32	1	32	0.2286	0.009	0.0324	$5.0x10^{-5}$
34	1	34	0.1693	0.007	0.0201	$3.1x10^{-5}$
36	1	36	0.127	0.005	0.0127	$2.0x10^{-5}$
38	1	38	0.1016	0.004	0.0081	$1.3x10^{-5}$
40	1	40	0.078	0.003	0.0049	$7.5x10^{-6}$

Table of wire gauges according to IEC-60228 standard

Conductor no x Ø (mm)	Max Ø (mm)	Max Ø (in)	Section (mm^2)	Section (sq in)
196x0.40	7.50	0.295	25.00	0.0387
7x2.14	6.10	0.240	25.00	0.0387
125x0.40	6.00	0.236	16.00	0.0248
7x1.72	4.90	0.192	16.00	0.0248
1x4.50	4.50	0.177	16.00	0.0248
80x0.40	4.70	0.155	10.00	0.0155
7x1.38	3.95	0.155	10.00	0.0155
1x3.60	3.60	0.141	10.00	0.0155
84x0.30	3.70	0.145	6.00	0.0093
7x1.50	3.15	0.124	6.00	0.0093
1x2.76	2.76	0.108	6.00	0.0093
56x0.30	2.80	0.110	4.00	0.0062
7x0.86	2.58	0.098	4.00	0.0062
1x2.25	2.25	0.082	4.00	0.0062
50x0.25	2.15	0.084	2.50	0.0038
7x0.68	2.04	0.080	2.50	0.0038
1x1.78	1.78	0.070	2.50	0.0038
30x0.25	1.60	0.062	1.50	0.0023
7x0.52	1.56	0.061	1.50	0.0023
1x1.4	1.40	0.055	1.50	0.0023
32x0.20	1.35	0.053	1.00	0.0015
7x0.43	1.29	0.050	1.00	0.0015
1x1.15	1.15	0.045	1.00	0.0015
42x0.15	1.20	0.047	0.75	0.0011
28x0.20	1.15	0.045	0.75	0.0011
1x1.0	1.00	0.039	0.75	0.0011
28x0.15	0.95	0.037	0.50	$7.7x10^{-4}$
16x0.20	0.90	0.035	0.50	$7.7x10^{-4}$
1x0.80	0.80	0.031	0.50	$7.7x10^{-4}$
7x0.25	0.75	0.029	0.34	$5.2x10^{-4}$
1x0.60	0.60	0.023	0.28	$4.3x10^{-4}$
14x0.15	0.75	0.029	0.25	$3.8x10^{-4}$
7x0.20	0.65	0.023	0.22	$3.4x10^{-4}$
18x0.10	0.50	0.019	0.14	$2.1x10^{-4}$
14x0.10	0.40	0.015	0.11	$1.7x10^{-4}$
21x0.07	0.40	0.015	0.09	$1.3x10^{-4}$
14x0.10	0.40	0.015	0.09	$1.3x10^{-4}$

Note: 1) not included in the standard

Product safety notice

PLEASE READ AND FOLLOW ALL INSTUCTIONS CAREFULLY AND CONSULT ALL RELEVENT NATIONAL AND INTERNATIONAL SAFETY REGULATIONS FOR YOUR APPLICATION.
IMPROPER HANDLING, CABLE ASSEMBLY, OR WRONG USE OF CONNECTORS CAN RESULT IN HAZARDOUS SITUATIONS.

1. **SHOCK AND FIRE HAZARD**
   Incorrect wiring, the use of damaged components, presence of foreign objects (such as metal debris), and / or residue (such as cleaning fluids), can result in short circuits, overheating, and / or risk of electric shock.
   Mated components should never be disconnected while live as this may result in an exposed electric arc and local overheating, resulting in possible damage to components.

2. **HANDLING**
   Connectors and their components should be visually inspected for damage prior to installation and assembly. Suspect components should be rejected or returned to the factory for verification.
   Connector assembly and installation should only be carried out by properly trained personnel. Proper tools must be used during installation and / or assembly in order to obtain safe and reliable performance.

3. **USE**
   Connectors with exposed contacts should never be live (or on the current supply side of a circuit). Under general conditions voltages above 30 VAC and 42 VDC are considered hazardous and proper measures should be taken to eliminate all risk of transmission of such voltages to any exposed metal part of the connector.

4. **TEST AND OPERATING VOLTAGES**
   The maximum admissible operating voltage depends upon the national or international standards in force for the application in question. Air and creepage distances impact the operating voltage; reference values are indicated in the catalog however these may be influenced by PC board design and / or wiring harnesses.
   The test voltage indicated in the catalog is 75% of the mean breakdown voltage; the test is applied at 500 V/s and the test duration is 1 minute.

5. **CE MARKING CE**
   CE marking CE means that the appliance or equipment bearing it complies with the protection requirements of one or several European safety directives.
   CE marking CE applies to complete products or equipment, **but not to electromechanical components, such as connectors**.

6. **PRODUCT IMPROVEMENTS**
   The LEMO Group reserves the right to modify and improve to our products or specifications without providing prior notification.

Notes:

Notes:

LEMO complete product range

	B	S	K	E	F	00	01	0A	3T	4A	4M	3K. 93C	1D	Y	05	5G	2G	2C	L	H	M	R	N	03	V	W	T7	P	D	K/S	01	DIN
Unipole		■		■		■																	■		■							
Multipole	■	■	■	■	■	■											■	■	■	■	■	■	■	■	■	■		•				
Coaxial 50 Ω		■		■		■	■	■										■					■	■	■							■
Coaxial 75 Ω		■	■	■				■	■														■		■							■
Multi Coaxial	■	■	■	■																			■			■						
Mixed Coax + LV	■	■	■	■																		■	■		■	■		•				
Triaxial 50 Ω		■		■		■					■												■		■							
Triaxial 75 Ω		■		■					■	■	■												■		■		■					
Mixed Triax + LV	■		■																				■			■						
Quadrax													■																			
High Voltage		■		■										■	■																	
Multi High Voltage	■	■	■	■												■														■		
Mixed HV + LV	■	■	■	■																		■						•				
Fibre Optic	■		■																										■		■	
Multi Fibre Optic	■		■		■															■			■			■						
Mixed FO + LV	■		■		■							■								■			■			■		•				
Thermocouple	■	■	■	■															■				■									
Fluidic	■					■																						•				
Multi Fluidic	■		■																				■									
Mixed Fluidic + LV	■		■																			■	■			■						

Most frequently used in darker colour

• included in this catalogue

B Series Keyed

S Series

K Series Keyed

E Series

F Series Keyed

00 Series

01 Series

0A Series

3T Series

4A Series

4M Series Keyed

3K.93C Series Keyed

1D Series

Y Series

05 Series

5G Series Keyed

2G Series Keyed

2C Series

L Series Keyed

H Series

M Series Keyed

R Series Keyed

N Series Keyed

03 Series Keyed

V Series

W Series Keyed

Cable assembly

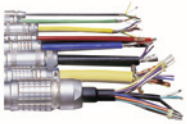

K/S Series Keyed

REDEL T7 Series

REDEL P Series Keyed

REDEL D Series

01 Series Keyed

VAA Series

SAA Series

TAA Series

No reproduction or use without express permission of editorial or pictorial content, in any manner.
LEMO SA reserves the right to modify and improve specifications, at all times, without any notification.

LEMO HEADQUARTERS

SWITZERLAND
LEMO SA
Chemin des Champs-Courbes 28 - P.O. Box 194 - CH-1024 Ecublens
Tel. (+41 21) 695 16 00 - Fax (+41 21) 695 16 02 - e-mail: info@lemo.com

LEMO SUBSIDIARIES

AUSTRIA
LEMO Elektronik GesmbH
Lemböckgasse 49/E6-3
1230 Wien
Tel: (+43 1) 914 23 20 0
Fax:(+43 1) 914 23 20 11
sales@lemo.at

CANADA
LEMO Canada Inc
44 East Beaver Creek Road, unit 20
Richmond Hill, Ontario L4B 1G8
Tel: (+1 905) 889 56 78
Fax: (+1 905) 889 49 70
info-canada@lemo.com

CHINA / HONG KONG
LEMO Electronics (Shanghai) Co., Ltd
First Floor, Block E,
18 Jindian Road, Pudong
Shanghai, China, 201206
Tel: (+86 21) 5899 7721
Fax: (+86 21) 5899 7727
cn.sales@lemo.com

DENMARK
LEMO Denmark A/S
Gammel Mosevej 46
2820 Gentofte
Tel: (+45) 45 20 44 00
Fax: (+45) 45 20 44 01
info-dk@lemo.com

FRANCE
LEMO France Sàrl
24/28 Avenue Graham Bell
Bâtiment Balthus 4
Bussy Saint Georges
77607 Marne la Vallée Cedex 3
Tel: (+33 1) 60 94 60 94
Fax: (+33 1) 60 94 60 90
info-fr@lemo.com

GERMANY
LEMO Elektronik GmbH
Hanns-Schwindt-Str. 6
81829 München
Tel: (+49 89) 42 77 03
Fax: (+49 89) 420 21 92
info@lemo.de

HUNGARY
REDEL Elektronika Kft
Nagysándor József u. 6-12
1201 Budapest
Tel: (+36 1) 421 47 10
Fax: (+36 1) 421 47 57
info-hu@lemo.com

ITALY
LEMO Italia srl
Viale Lunigiana 25
20125 Milano
Tel: (+39 02) 66 71 10 46
Fax: (+39 02) 66 71 10 66
sales.it@lemo.com

JAPAN
LEMO Japan Ltd
2-7-22, Mita,
Minato-ku, Tokyo, 108-0073
Tel: (+81 3) 54 46 55 10
Fax: (+81 3) 54 46 55 11
lemoinfo@lemo.co.jp

NETHERLANDS / BELGIUM
LEMO Connectors Benelux
De Trompet 1060
1967 DA Heemskerk
Tel. (+31) 251 25 78 20
Fax (+31) 251 25 78 21
info@lemo.nl

NORWAY / ICELAND
LEMO Norway A/S
Stanseveien 6B
0975 Oslo
Tel: (+47) 22 91 70 40
Fax: (+47) 22 91 70 41
info-no@lemo.com

SINGAPORE
LEMO Asia Pte Ltd
4 Leng Kee Road,
#06-09 SiS Building
Singapore 159088
Tel: (+65) 6476 0672
Fax: (+65) 6474 0672
sg.sales@lemo.com

SPAIN / PORTUGAL
IBERLEMO SAU
Brasil, 45, 08402 Granollers
Barcelona
Tel: (+34 93) 860 44 20
Fax: (+34 93) 879 10 77
info-es@lemo.com

SWEDEN / FINLAND
LEMO Nordic AB
Mariehällsvägen 39A
168 65 Bromma
Tel: (+46 8) 635 60 60
Fax: (+46 8) 635 60 61
info-se@lemo.com

SWITZERLAND
LEMO Verkauf AG
Grundstrasse 22 B
6343 Rotkreuz
Tel: (+41 41) 790 49 40
Fax: (+41 41) 790 49 43
ch.sales@lemo.com

UNITED KINGDOM
LEMO UK Ltd
12-20 North Street
Worthing, West Sussex, BN11 1DU
Tel: (+44 1903) 23 45 43
Fax: (+44 1903) 20 62 31
lemouk@lemo.com

USA
LEMO USA Inc
P.O. Box 2408
Rohnert Park, CA 94927-2408
Tel: (+1 707) 578 88 11
(+1 800) 444 53 66
Fax:(+1 707) 578 08 69
info-US@lemo.com

© CAT.MP.REN.P1208, pdf updated September 2015

LEMO DISTRIBUTORS

AUSTRALIA, BRAZIL, CHILE, CZECH REPUBLIC, GREECE, INDIA, ISRAEL, NEW ZEALAND, PAKISTAN, POLAND, RUSSIA, SOUTH AFRICA, SOUTH KOREA, TAIWAN, TURKEY, UKRAINE

www.lemo.com