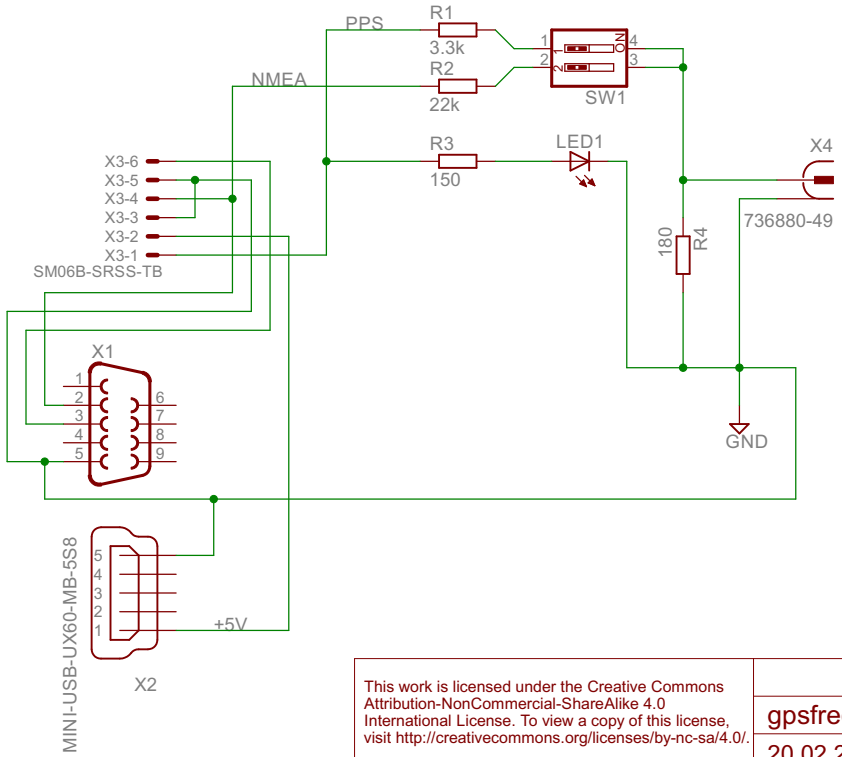

This work is licensed under the Creative Commons Attribution-NonCommercial-ShareAlike 4.0 International License. To view a copy of this license, visit http://creativecommons.org/licenses/by-nc-sa/4.0/.

Design by Mario Guggenberger

gpsfreq

20.02.2015 20:28:55

Sheet: 1/1