CHAPTER 5. DIAGRAMS

CONTENTS

1. INTERCONNECTION DIAGRAM
2. BLOCK DIAGRAMS
   2-1. OVERALL
   2-2. MAIN PCB ASS'Y (1/3)
   2-3. MAIN PCB ASS'Y (2/3)
   2-4. MAIN PCB ASS'Y (3/3)
   2-5. DC/DC PCB ASS'Y
   2-6. Abbreviation in Block Diagrams
3. P.C.B. DIAGRAMS
   3-1. MAIN PCB ASS'Y
   3-2. DC/DC PCB ASS'Y
   3-3. FLASH UNIT
   3-4. REAR COVER UNIT
   3-5. RLS PCB ASS'Y

1. INTERCONNECTION DIAGRAM

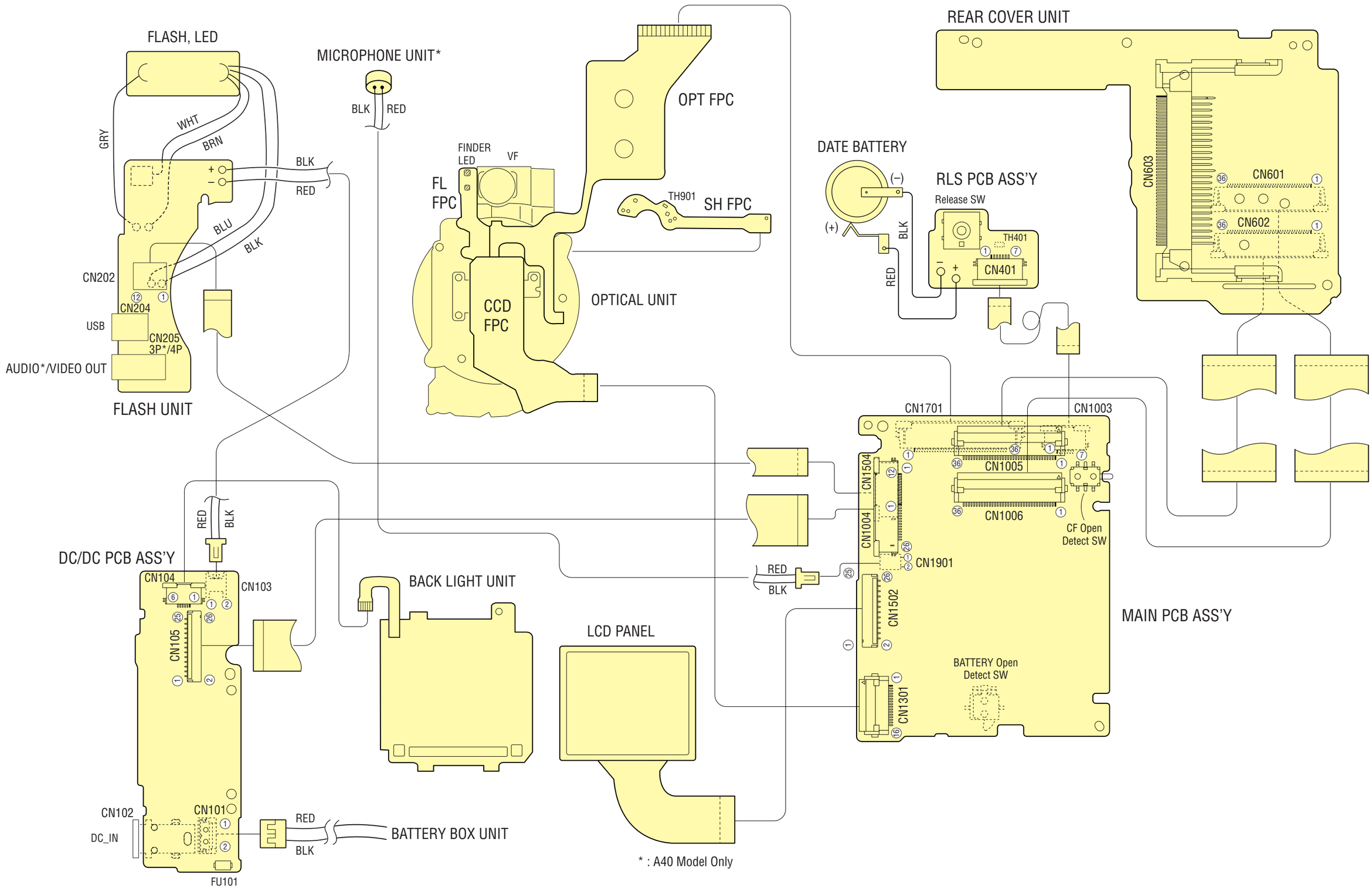

© CANON INC., 2002

CONNECTORS

MAIN PCB ASS'Y

CN1003	
1	M_GND
2	SCAN
3	SW1
4	SW2
5	BUT_BATT
6	VBATTEMP
7	C_GND

CN1004	
1	DC_DET
2	VDD2
3	VEE2
4	VCC2
5	C_GND
6	C_GND
7	C_GND
8	C_GND
9	VBATT
10	VCC1
11	VCC1
12	VCC1
13	VCC1A
14	VDD34
15	VCC34
16	E1PLAT
17	E2LAT
18	E3LAT
19	E4LAT
20	VCC1M
21	VCC1M
22	VCC1M
23	LED_BL
24	M_GND
25	M_GND
26	M_GND

CN1005	
1	M_GND
2	C_GND
3	SET
4	MINUS
5	PLUS
6	MENU
7	SCAN
8	POWER
9	VBATT_R
10	EXP/WB
11	DISP
12	DIAL0
13	SCON
14	DIAL1
15	DIAL2
16	C_GND
17	C_GND
18	/CD1
19	D03
20	D11
21	D04
22	D12
23	D05
24	D13
25	D06
26	D14
27	D07
28	D15
29	/CE1
30	/CE2
31	A10
32	/VS1
33	/OE
34	/IORD
35	A09
36	/IOWR

CN1006	
1	M_GND
2	C_GND
3	BUZZER
4	TELE
5	WIDE
6	C_GND
7	C_GND
8	/CD2
9	D10
10	/IOIS16
11	D09
12	D02
13	D08
14	D01
15	Not Connected
16	D00
17	Not Connected
18	A00
19	/REG
20	A01
21	Not Connected
22	A08
23	/WE
24	A07
25	IREQ
26	VCC1
27	VCC1
28	A06
29	Not Connected
30	A05
31	/VS2
32	A04
33	RESET
34	A03
35	/WAIT
36	A02

CN1301	
1	C_GND (LG)
2	VOUT (VO)
3	C_GND (PW)
4	VDD (OD)
5	SUB (SUB)
6	CSUB (OG)
7	VL (PT)
8	RG (R)
9	H2 (H2)
10	H1 (H1)
11	V1B (V1)
12	V1A (V5)
13	V2 (V2)
14	V3B (V3)
15	V3A (V6)
16	V4 (V4)

( ) : A30 Model

CN1502	
1	Not Connected
2	RGT
3	BLUE
4	RED
5	GREEN
6	PSIG
7	HCK1
8	HCK2
9	CEXT/REXT
10	Not Connected
11	REF
12	HST
13	WIDE
14	Not Connected
15	VSSG
16	VDDG
17	VSS
18	VDD
19	DWN
20	EN
21	VCK
22	VST
23	COM
24	Not Connected

CN1504	
1	UV_GND
2	VBUS
3	D–
4	D+
5	VIDEO
6	AUDIO
7	VC_DET
8	STSP
9	VCHGLVL
10	EFCHG
11	LEDS_AN
12	LED_SELF

CN1701	
1	ZMRST_EM
2	ZMRST_CO
3	ZMRST_AN
4	ZMRST_CA
5	LEDG_CA
6	LEDA_CA
7	LEDY_CA
8	LEDY_AN
9	LEDA_AN
10	LEDG_AN
11	AFRST_EM
12	AFRST_CO
13	AFRST_AN
14	AFRST_CA
15	ZMO–
16	ZMO–
17	ZMO+
18	ZMO+
19	AFA+
20	AFA–
21	AFB–
22	AFB+
23	ZMPO0_EM
24	ZMPO0_CA
25	ZMPO0_AN
26	ZMPO0_CO
27	ZMPO1_AN
28	ZMPO1_CA
29	ZMPO1_CO
30	ZMPO1_EM
31	IR+
32	IR–
33	SH+
34	SH–
35	THM2
36	THM1

RLS PCB ASS'Y

CN401	
1	M_GND
2	SCAN
3	SW1
4	SW2
5	BUT_BATT
6	VBATTEMP
7	C_GND

REAR COVER UNIT

CN601	
1	M_GND
2	C_GND
3	SET
4	MINUS
5	PLUS
6	MENU
7	SCAN
8	POWER
9	VBATT_R
10	EXP/WB
11	DISP
12	DIAL0
13	SCON
14	DIAL1
15	DIAL2
16	C_GND
17	C_GND
18	/CD1
19	D03
20	D11
21	D04
22	D12
23	D05
24	D13
25	D06
26	D14
27	D07
28	D15
29	/CE1
30	/CE2
31	A10
32	/VS1
33	/OE
34	/IORD
35	A09
36	/IOWR

CN602	
1	M_GND
2	C_GND
3	BUZZER
4	TELE
5	WIDE
6	C_GND
7	C_GND
8	/CD2
9	D10
10	/IOIS16
11	D09
12	D02
13	D08
14	D01
15	/STSDHG
16	D00
17	SPKR
18	A00
19	/REG
20	A01
21	INPACK
22	A08
23	/WE
24	A07
25	IREQ
26	VCC1
27	VCC1
28	A06
29	/CSEL
30	A05
31	/VS2
32	A04
33	RESET
34	A03
35	/WAIT
36	A02

CN603	
1	GND
2	D03
3	D04
4	D05
5	D06
6	D07
7	/CE1
8	A10
9	/OE
10	A09
11	A08
12	A07
13	VCC
14	A06
15	A05
16	A04
17	A03
18	A02
19	A01
20	A00
21	D00
22	D01
23	D02
24	/IOIS16
25	/CD2
26	/CD1
27	D11
28	D12
29	D13
30	D14
31	D15
32	/CE2
33	/VS1
34	/IORD
35	/IOWR
36	/WE
37	IREQ
38	VCC
39	/CSEL
40	/VS2
41	RESET
42	/WAIT
43	/INPACK
44	/REG
45	/SPKR
46	/STSDHG
47	D08
48	D09
49	D10
50	GND

FLASH UNIT

CN201	
1	VBATT
2	GND

CN202	
1	LED_SELF
2	LEDS_AN
3	EFCHG
4	VCHGLVL
5	STSP
6	AUDIO*
7	VC_DET
8	VIDEO
9	D+
10	D–
11	VBUS
12	UV_GND

CN204	
1	VBUS
2	D–
3	D+
4	Not Connected
5	UV_GND

CN205	
1	UV_GND
2	AUDIO
3	VIDEO
4	VC_DET

*A40 Model Only

DC/DC PCB ASS'Y

CN101	
1	BATT+
2	BATT–

CN102	
1	VDC_IN
2	BATT-_SEPA
3	GND

CN103	
1	VBATT
2	GND

CN104	
1	LED_BL
2	LED_BL
3	LED_BLA4
4	LED_BLA3
5	LED_BLA2
6	LED_BLA1

CN105	
1	Not Connected
2	VDD2
3	VEE2
4	VCC2
5	C_GND
6	C_GND
7	C_GND
8	C_GND
9	VBATT
10	VCC1
11	VCC1
12	VCC1
13	VCC1A
14	VDD34
15	VCC34
16	E1PLAT
17	E2LAT
18	E3LAT
19	E4LAT
20	VCC1M
21	VCC1M
22	VCC1M
23	LED_BL
24	M_GND
25	M_GND
26	M_GND

© CANON INC., 2002

2. BLOCK DIAGRAMS

2.1 OVERALL

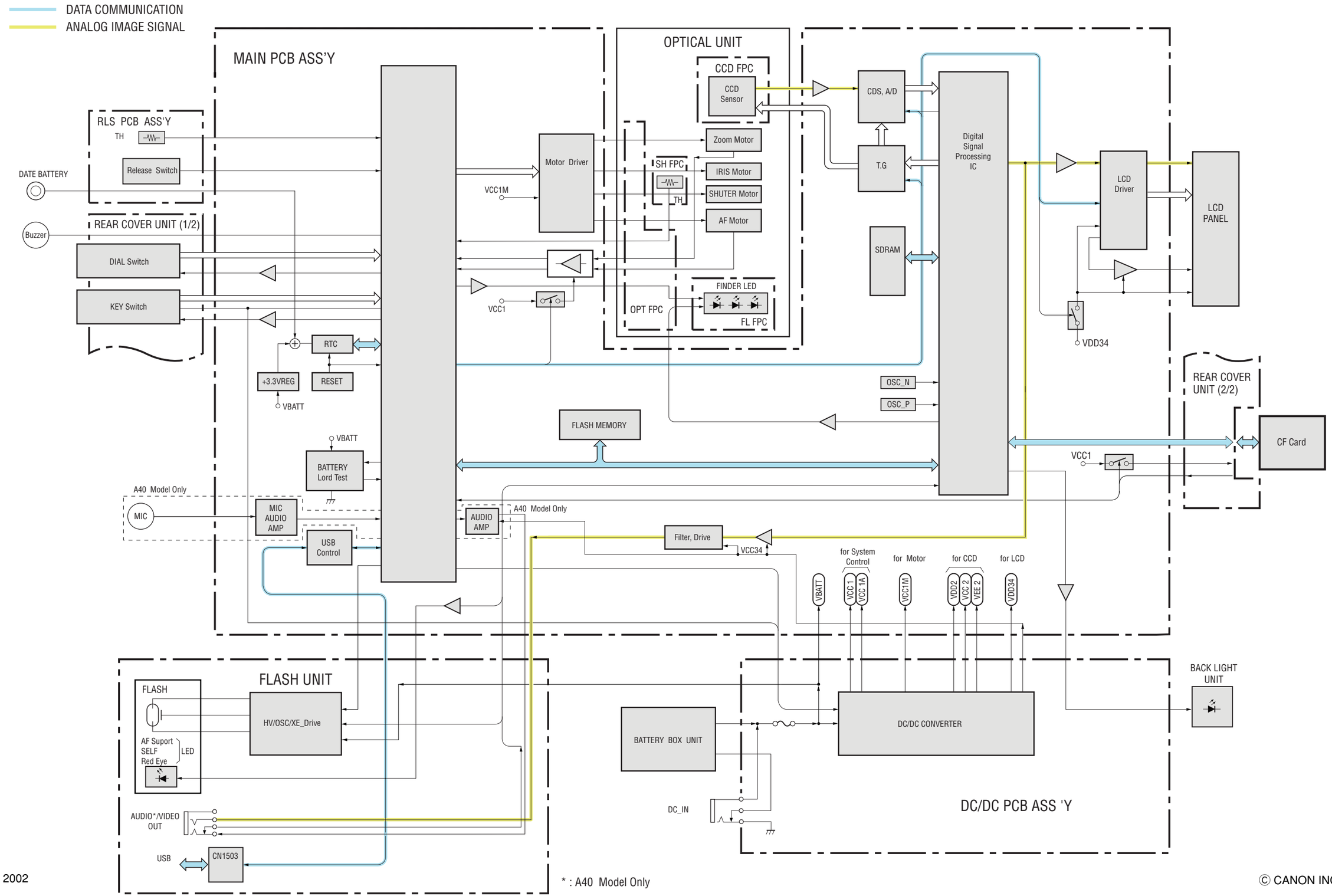

* : A40 Model Only

© CANON INC., 2002

2.2 MAIN PCB ASS'Y (1/3)

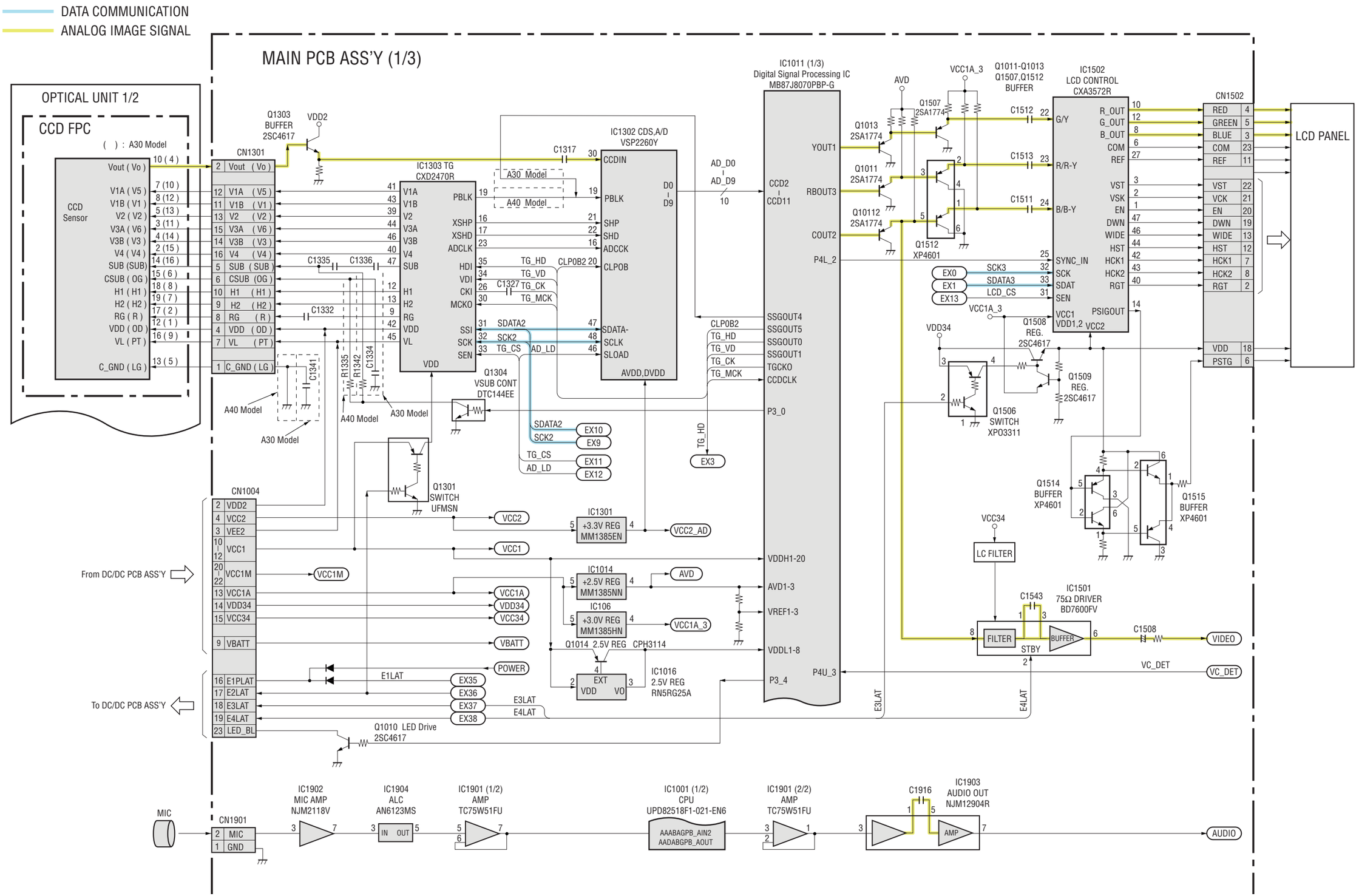

© CANON INC., 2002

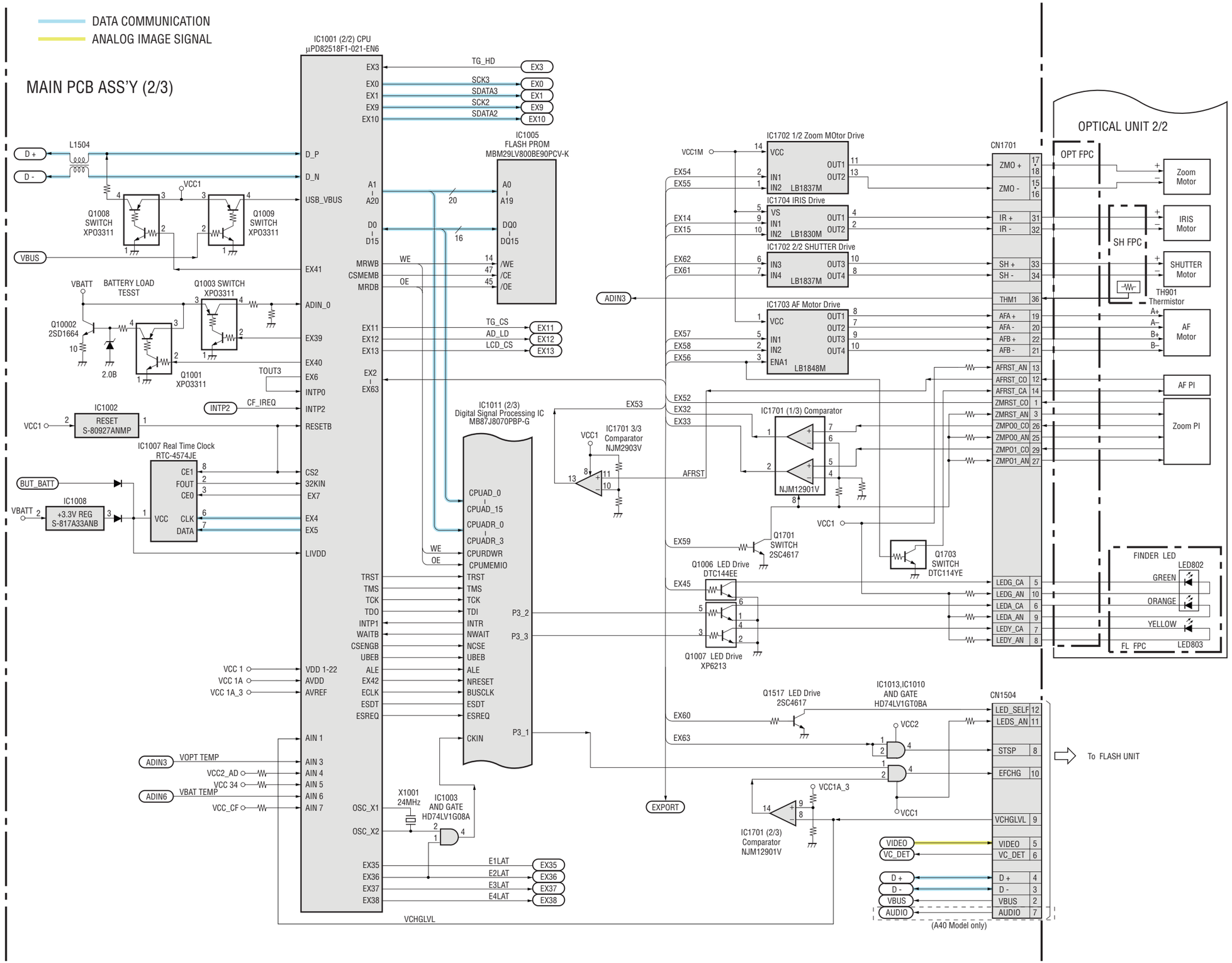

© CANON INC., 2002

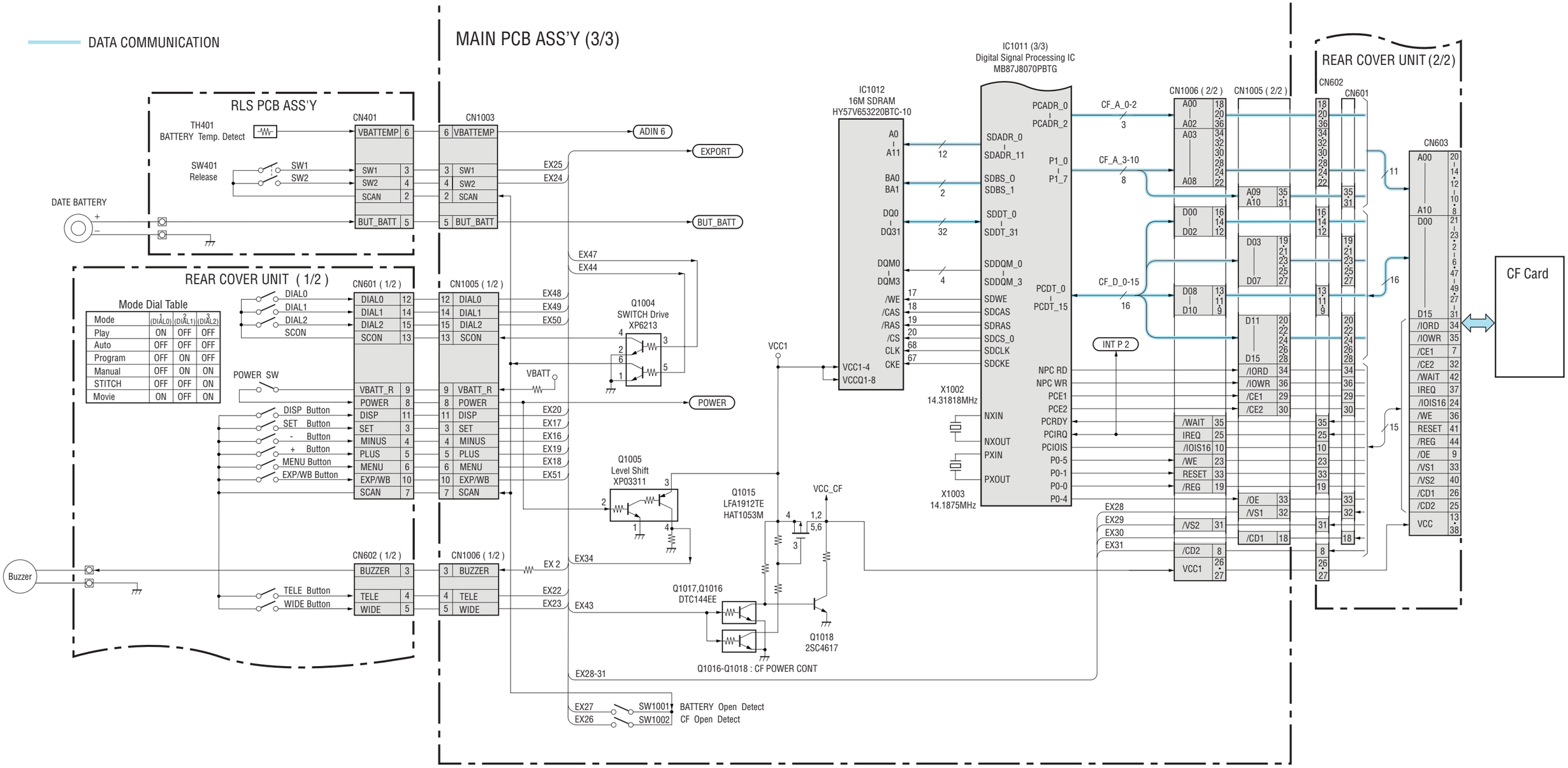

© CANON INC., 2002

2.5 DC/DC PCB ASS'Y

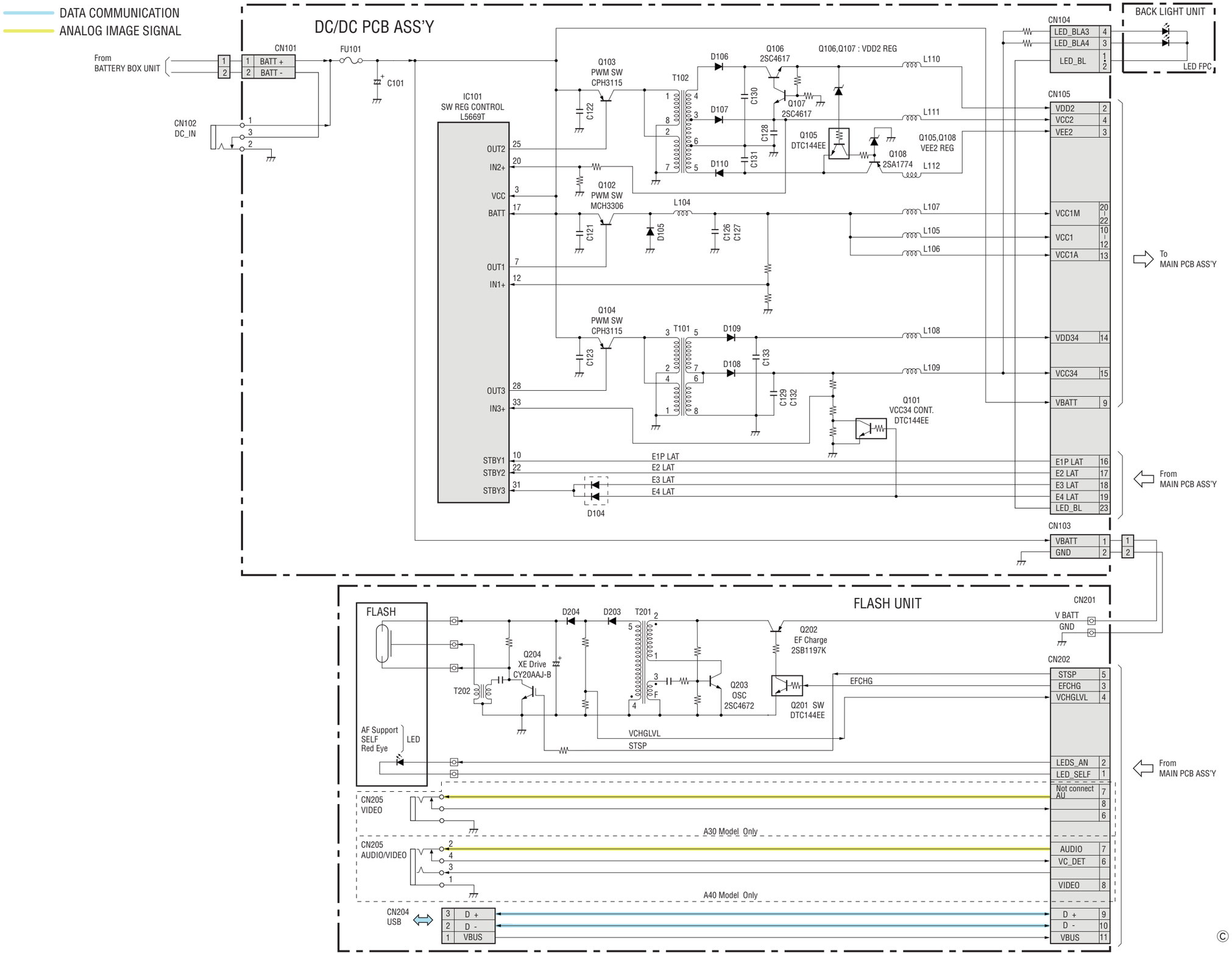

© CANON INC., 2002

2.6 Abbreviation in Block Diagrams

Abbreviation	Nominal name	Description
ADC	Analog-to-Digital (A/D) Converter	
AE	Automatic Exposure control	
AF	Automatic Focussing control	
AND	Logic AND circuit	
R-Y/B-Y		Color difference signals of TV system
BPF	Band-Pass Filter	
BUFFER	Buffer circuit	
C	Chrominance signal	Color component signal of TV system
CCD	Charge-Coupled Device	CCD imager
CDS	Correlated Double Sampling system	
COMP.VIDEO	Composite video signal	
COMPARATOR	Voltage comparator	
CPU	Central Processing Unit	
DAC	Digital-to-Analog (D/A) Converter	
DRAM	Dynamic Random Access Memory	Memory with which read and write are freely possible.
DSP	Digital Signal Processing	Typically DSP device
EEPROM	Electrically Erasable PROM	PROM that is electrically erasable.
EVF	Electronic View Finder	
FET	Field Effect Transistor	
FLASH MEMORY		Non-volatile memory with which write and read are freely possible.
HPF	High-Pass Filter	
I/F	InterFace	The circuit that interconnects 2 devices or circuits.
IGBT	Insulated Gate Bipolar Transistor	Conductivity-modulation type FET transistor
INV.	Logic Inverter circuit	
IR	InfraRed ray	
IRIS	Iris	
LCD	Liquid Crystal Device	Typically LCD display
LED	Light Emitting Diode	Typically LED display
LPF	Low-Pass Filter	
NTSC	National Television System Committees	NTSC color TV system developed in USA
OP Amp	OPerational Amplifier	
OR	Logic OR circuit	
OSC	OSCillator	
PAL	Phase Alternating by Line	PAL color TV system developed in Germany
PLL	Phase Locked Loop	
PROM	Programmable Read Only Memory	Non-volatile memory in which program can be written.
PWM	Pulse Width Modulation	
REG.	REGulated power supply	
RTC	Real Time Clock	Reference clock oscillator
SDRAM	Synchronous Dynamic RAM	DRAM whose bus interface is synchronous.
SECAM	SEquential Colour À Mémoire	SECAM color TV system developed in France
SW REG	SWitching REGulator	Switching type regulated power supply device
TG	Timing Generator	
USB	Universal Serial Bus	USB type serial data communication system
VCO	Voltage Controlled Oscillator	
VCXO	Voltage Controlled X'tal Oscillator	
XE	Xenon Tube	
Y	Y-signal	Luminance component signal of TV system

3. P.C.B. DIAGRAMS

3.1 MAIN PCB ASS'Y

MAIN PCB ASS'Y (SOLDERING SIDE)

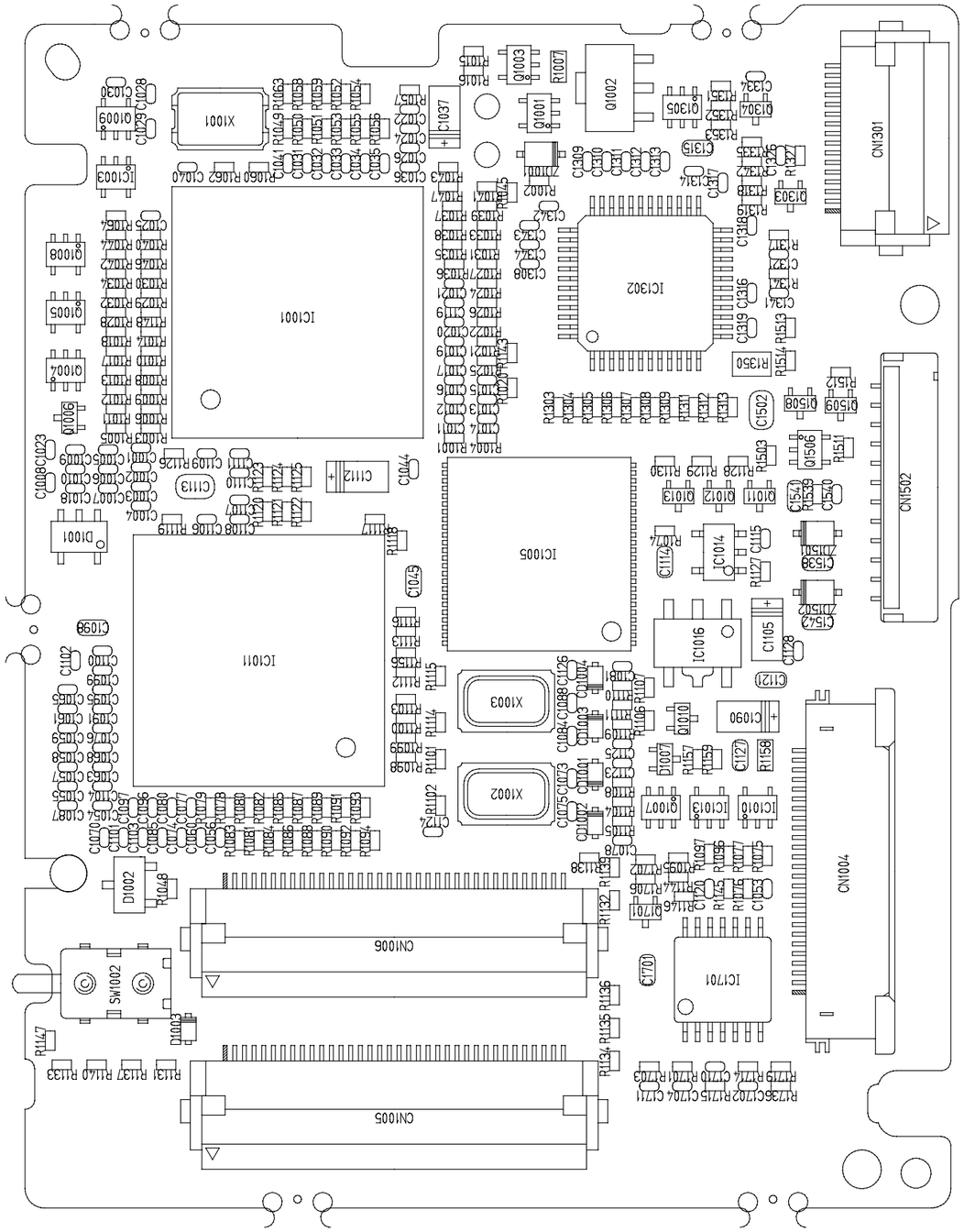

MAIN PCB ASS'Y (COMPONENT SIDE)

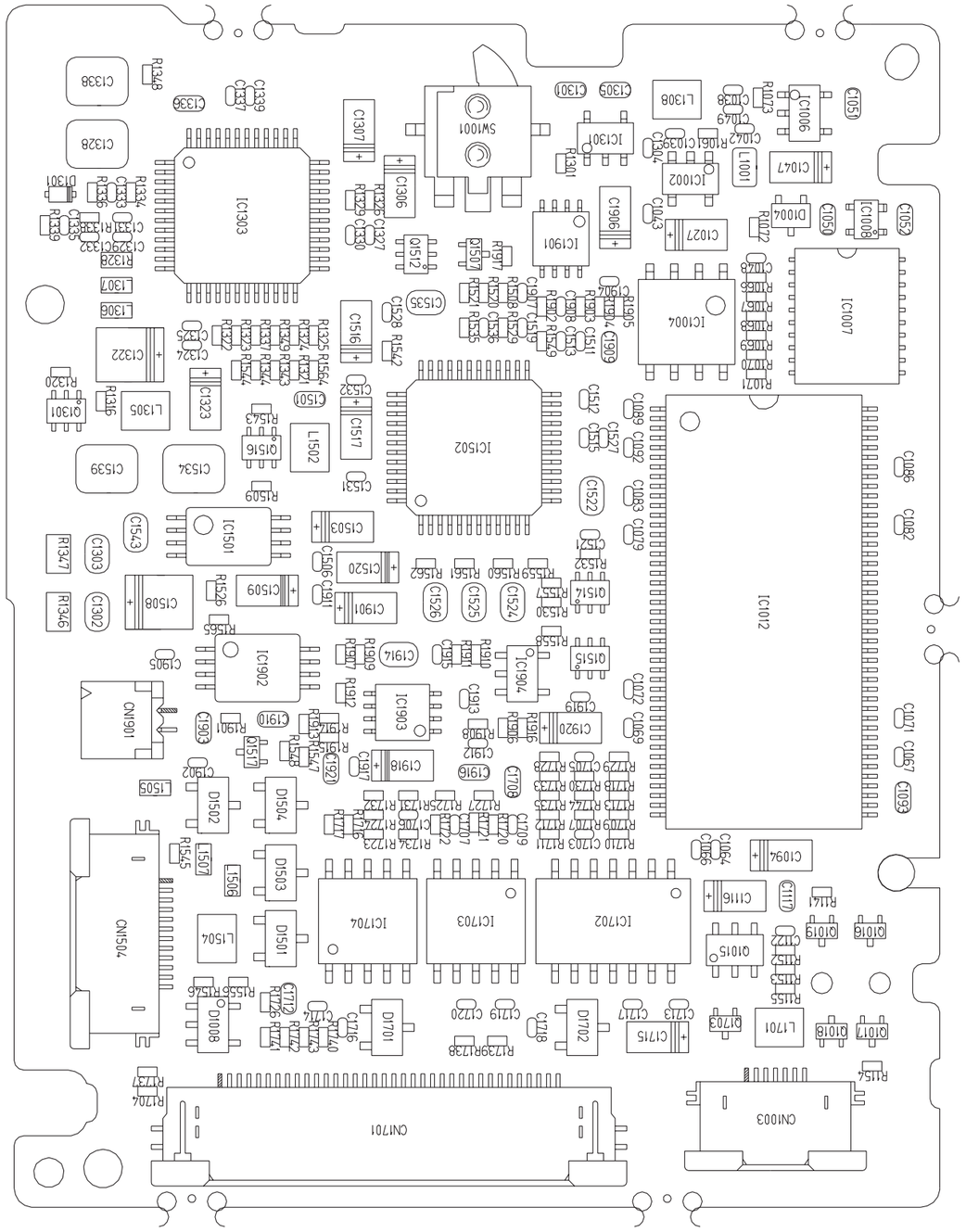

© CANON INC., 2002

3.2 DC/DC PCB ASS'Y

DC PCB ASS'Y (SOLDERING SIDE)

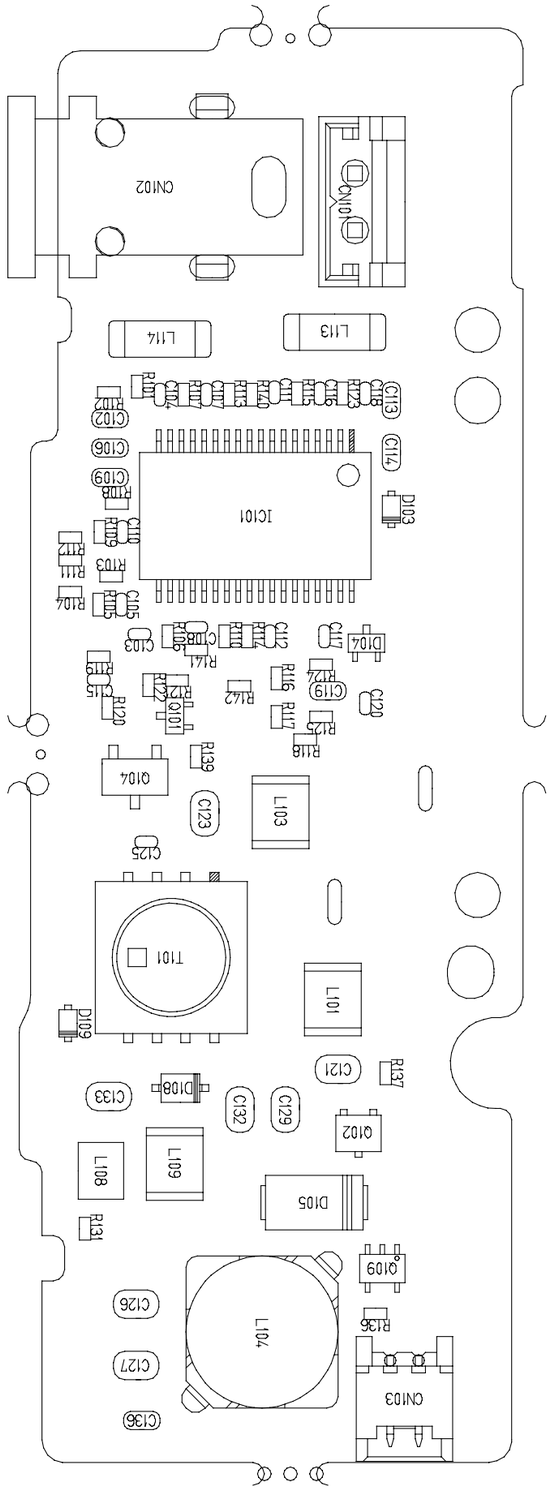

DC PCB ASS'Y (COMPONENT SIDE)

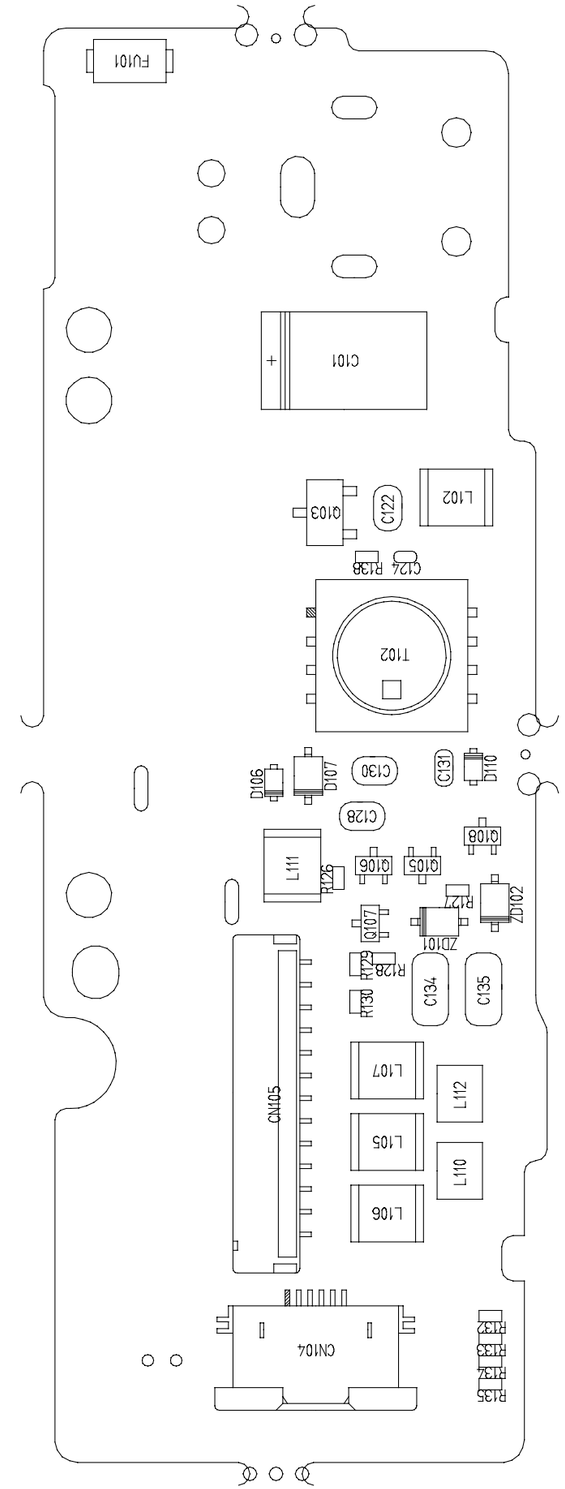

© CANON INC., 2002

3.3 FLASH UNIT

FLASH PCB ASS'Y (SOLDERING SIDE)

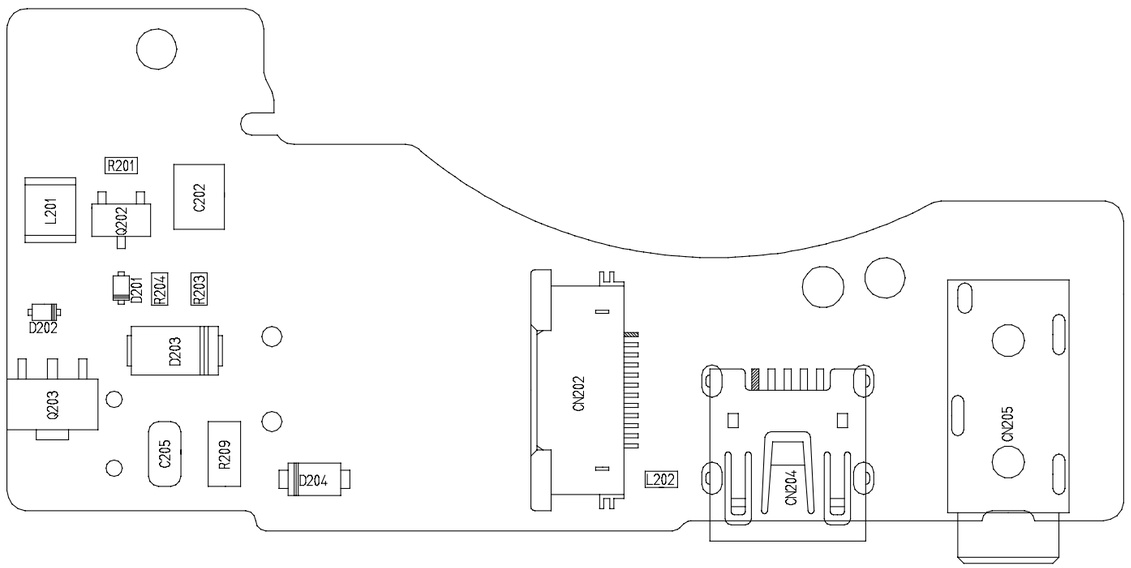

FLASH PCB ASS'Y (COMPONENT SIDE)

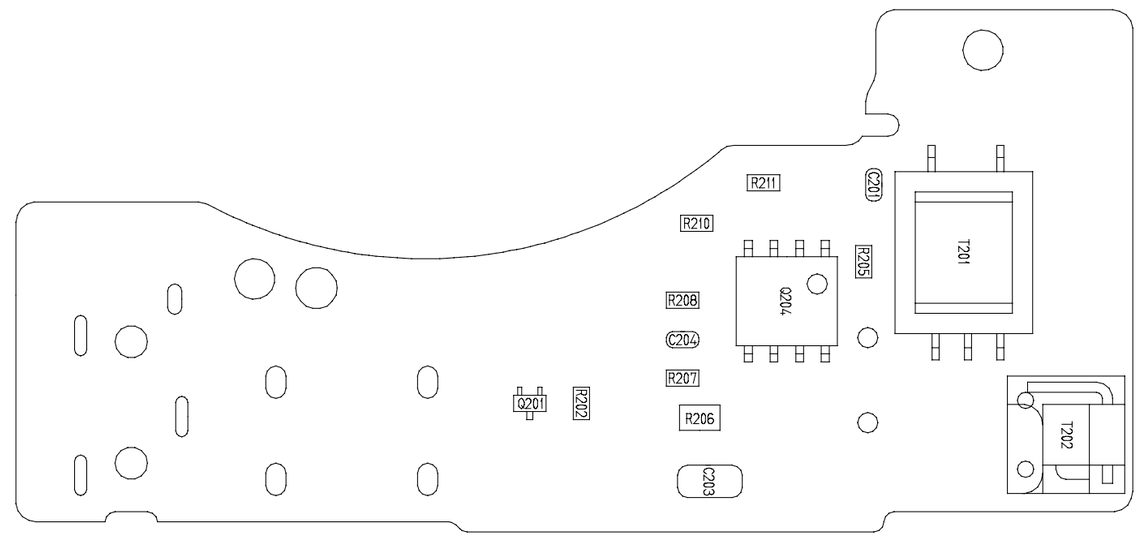

© CANON INC., 2002

3.4 REAR COVER UNIT

REAR COVER UNIT (SOLDERING SIDE)

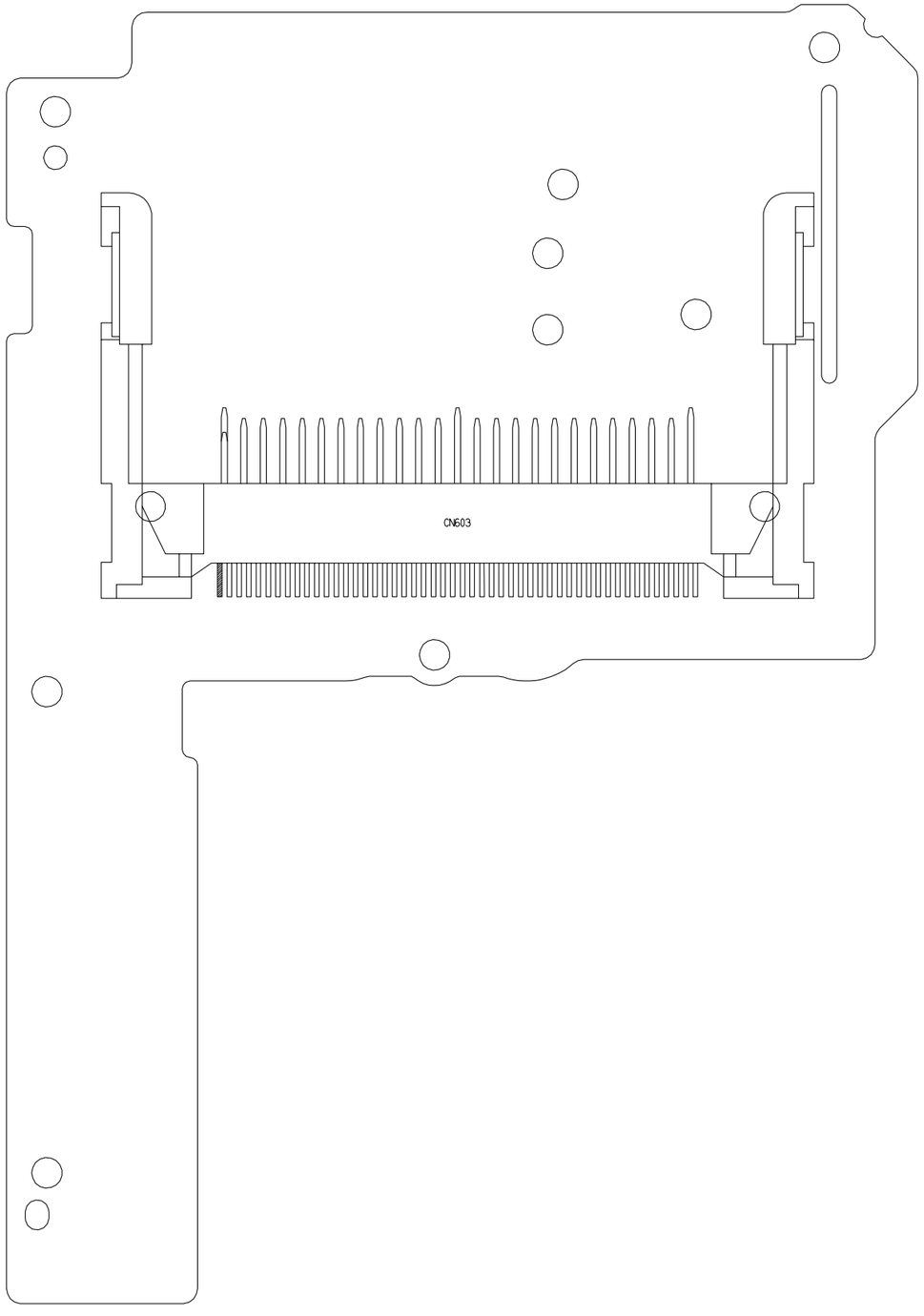

REAR COVER UNIT (COMPONENT SIDE)

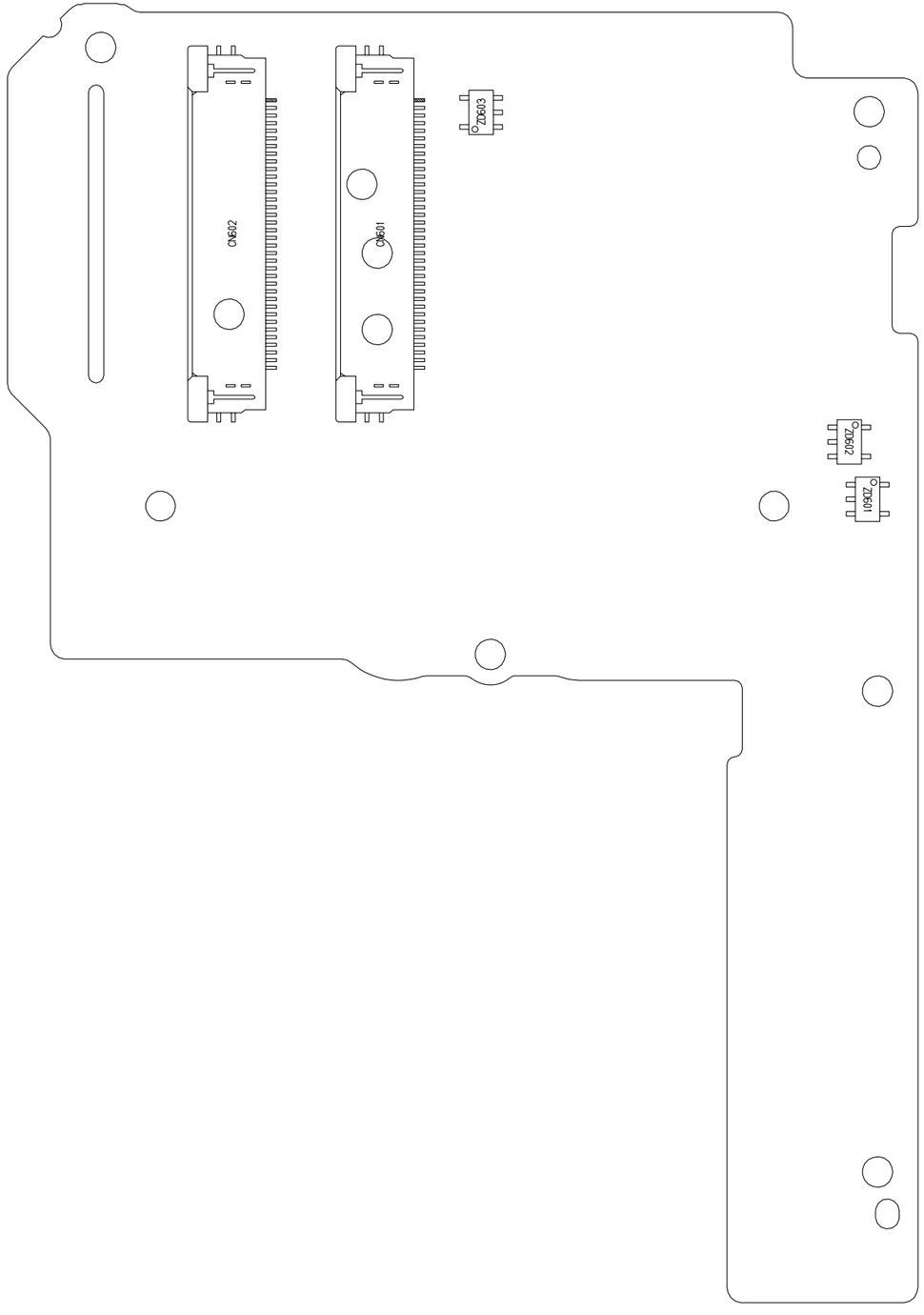

© CANON INC., 2002

RLS PCB ASS'Y (SOLDERING SIDE)

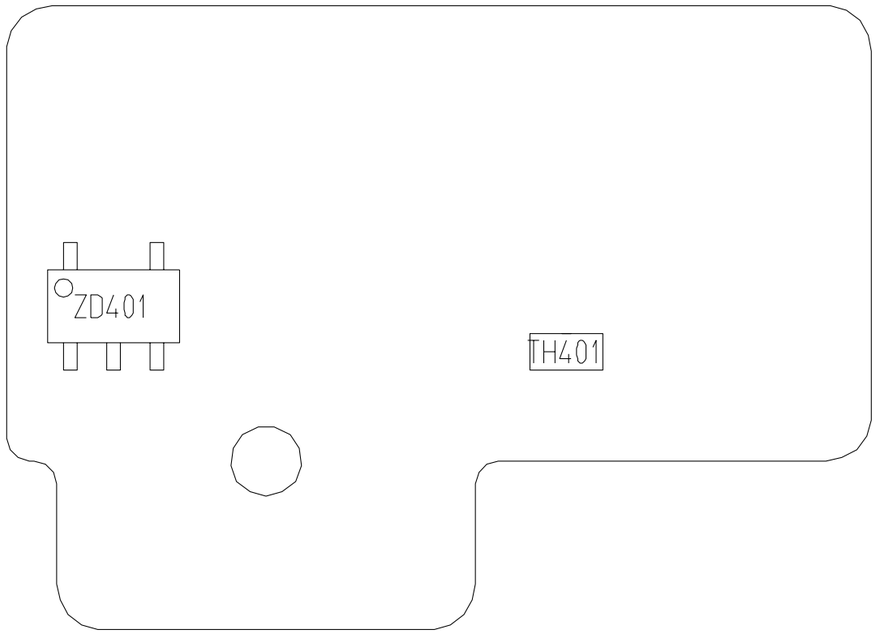

RLS PCB ASS'Y (COMPONENT SIDE)

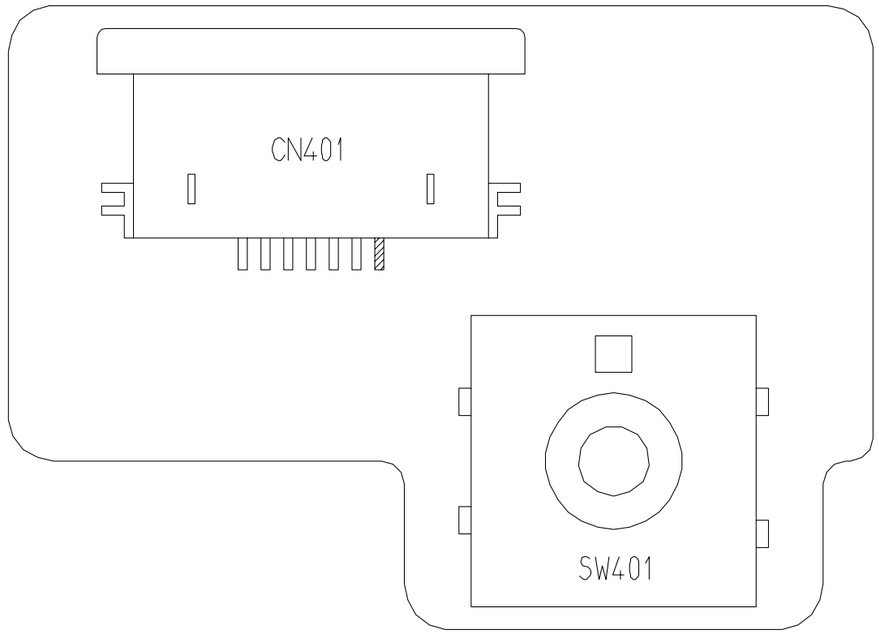

© CANON INC., 2002