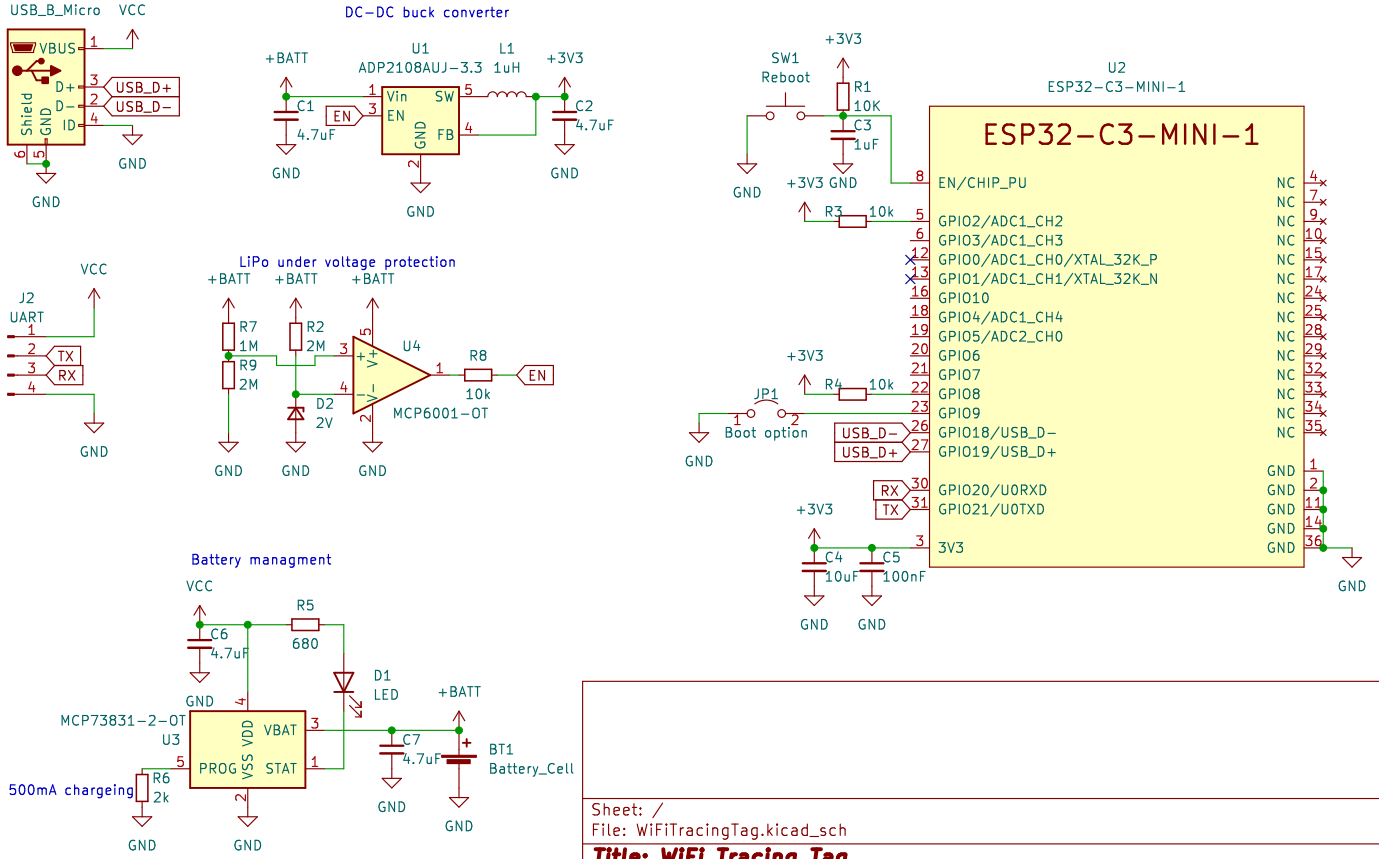

Sheet: /
File: WiFiTracingTag.kicad_sch

Title: WiFi Tracing Tag

Size: A5	Date:	**Rev: 1**
KiCad E.D.A. kicad (5.99.0-12705-gbb5c58b3cf)		Id: 1/1