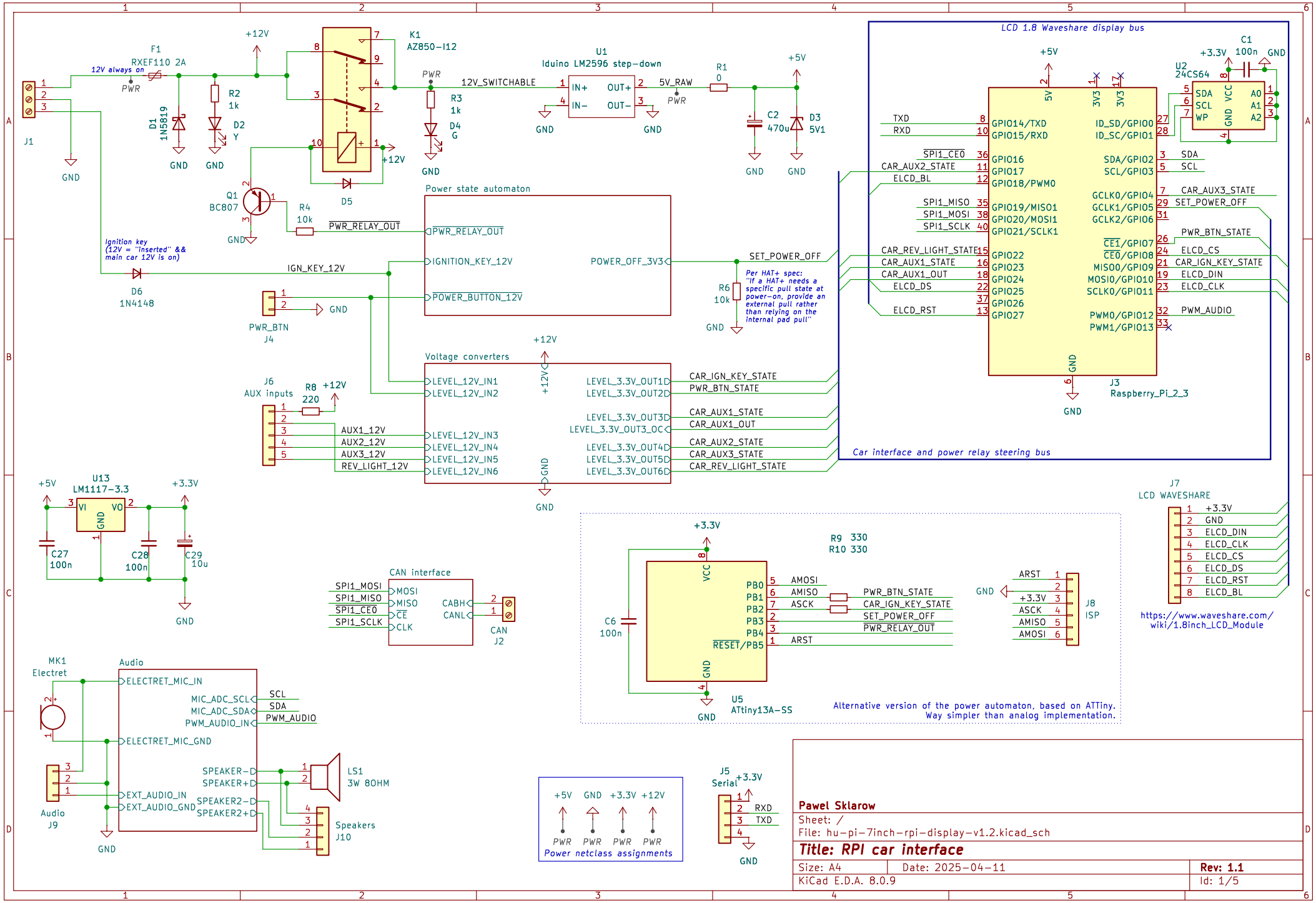
J1
F1
RXEF110 2A
12V always on
PWR
D1
1N5819
R2
1k
D2
Y
GND
+12V
K1
AZ850-I12
D5
Q1
BC807
R4
10k
PWR_RELAY_OUT
Ignition key
(12V = "inserted" && main car 12V is on)
D6
1N4148
IGN_KEY_12V
PWR_BTN
J4
R3
1k
D4
G
12V_SWITCHABLE
U1
Iduino LM2596 step-down
IN+
IN-
OUT+
OUT-
5V_RAW
R1
0
+5V
C2
470u
D3
5V1
Power state automaton
PWR_RELAY_OUT
IGNITION_KEY_12V
POWER_BUTTON_12V
POWER_OFF_3V3
SET_POWER_OFF
R6
10k
Per HAT+ spec:
"If a HAT+ needs a specific pull state at power-on, provide an external pull rather than relying on the internal pad pull"
Voltage converters
LEVEL_12V_IN1
LEVEL_12V_IN2
LEVEL_12V_IN3
LEVEL_12V_IN4
LEVEL_12V_IN5
LEVEL_12V_IN6
LEVEL_3.3V_OUT1
LEVEL_3.3V_OUT2
LEVEL_3.3V_OUT3
LEVEL_3.3V_OUT3_OC
LEVEL_3.3V_OUT4
LEVEL_3.3V_OUT5
LEVEL_3.3V_OUT6
CAR_IGN_KEY_STATE
PWR_BTN_STATE
CAR_AUX1_STATE
CAR_AUX1_OUT
CAR_AUX2_STATE
CAR_AUX3_STATE
CAR_REV_LIGHT_STATE
J6
AUX inputs
R8
220
AUX1_12V
AUX2_12V
AUX3_12V
REV_LIGHT_12V
LCD 1.8 Waveshare display bus
J3
Raspberry_Pi_2_3
GPIO14/TXD
GPIO15/RXD
GPIO16
GPIO17
GPIO18/PWM0
GPIO19/MISO1
GPIO20/MOSI1
GPIO21/SCLK1
GPIO22
GPIO23
GPIO24
GPIO25
GPIO26
GPIO27
ID_SD/GPIO0
ID_SC/GPIO1
SDA/GPIO2
SCL/GPIO3
GCLK0/GPIO4
GCLK1/GPIO5
GCLK2/GPIO6
CE1/GPIO7
CE0/GPIO8
MISO0/GPIO9
MOSI0/GPIO10
SCLK0/GPIO11
PWM0/GPIO12
PWM1/GPIO13
TXD
RXD
SPI1_CE0
CAR_AUX2_STATE
ELCD_BL
SPI1_MISO
SPI1_MOSI
SPI1_SCLK
CAR_REV_LIGHT_STATE
CAR_AUX1_STATE
CAR_AUX1_OUT
ELCD_DS
ELCD_RST
SDA
SCL
CAR_AUX3_STATE
SET_POWER_OFF
PWR_BTN_STATE
ELCD_CS
CAR_IGN_KEY_STATE
ELCD_DIN
ELCD_CLK
PWM_AUDIO
U2
24CS64
SDA
SCL
WP
VCC
GND
A0
A1
A2
C1
100n
+3.3V
Car interface and power relay steering bus
U13
LM1117-3.3
VI
VO
C27
100n
C28
100n
C29
10u
CAN interface
SPI1_MOSI
SPI1_MISO
SPI1_CE0
SPI1_SCLK
MOSI
MISO
CE
CLK
CABH
CANL
CAN
J2
MK1
Electret
Audio
ELECTRET_MIC_IN
MIC_ADC_SCL
MIC_ADC_SDA
PWM_AUDIO_IN
ELECTRET_MIC_GND
SPEAKER-
SPEAKER+
SPEAKER2-
SPEAKER2+
EXT_AUDIO_IN
EXT_AUDIO_GND
Audio
J9
LS1
3W 8OHM
Speakers
J10
C6
100n
U5
ATtiny13A-SS
PB0
PB1
PB2
PB3
PB4
RESET/PB5
AMOSI
AMISO
ASCK
ARST
R9 330
R10 330
J8
ISP
J7
LCD WAVESHARE
https://www.waveshare.com/wiki/1.8inch_LCD_Module
Alternative version of the power automaton, based on ATTiny.
Way simpler than analog implementation.
+5V
GND
+3.3V
+12V
PWR
Power netclass assignments
J5
Serial
RXD
TXD
Pawel Sklarow
Sheet: /
File: hu-pi-7inch-rpi-display-v1.2.kicad_sch
Title: RPI car interface
Size: A4
Date: 2025-04-11
Rev: 1.1
KiCad E.D.A. 8.0.9
Id: 1/5

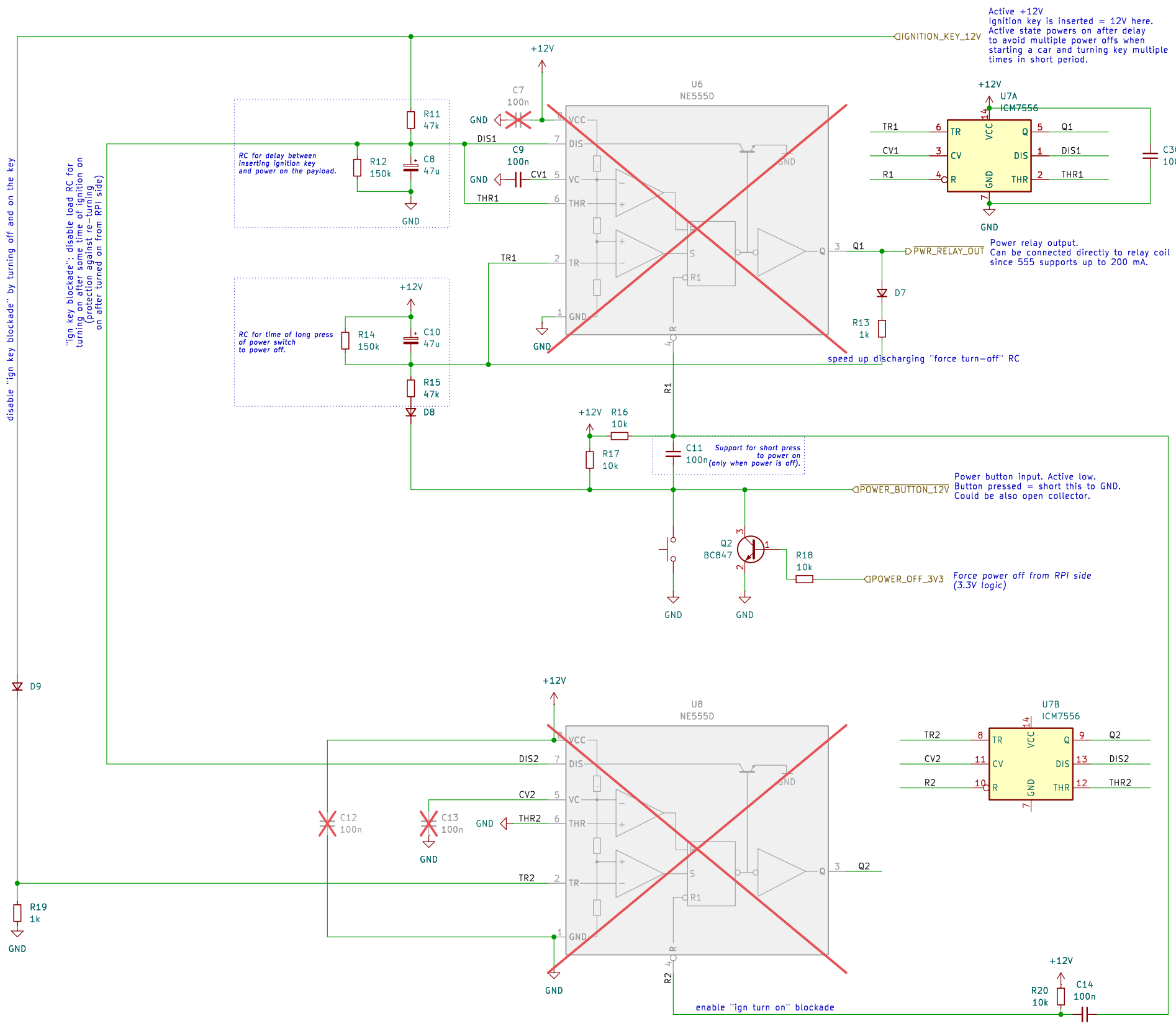


HAT for car head unit based on Raspberry PI

**Pawel Sklarow**

Sheet: /Power state automaton/

File: hu-pi-7inch-rpi-display-power-automaton.kicad_sch

***Title: Power state machine automaton***

| Size: A3 | Date: | **Rev:** |
|---|---|---|
| KiCad E.D.A. 8.0.9 | | Id: 2/5 |

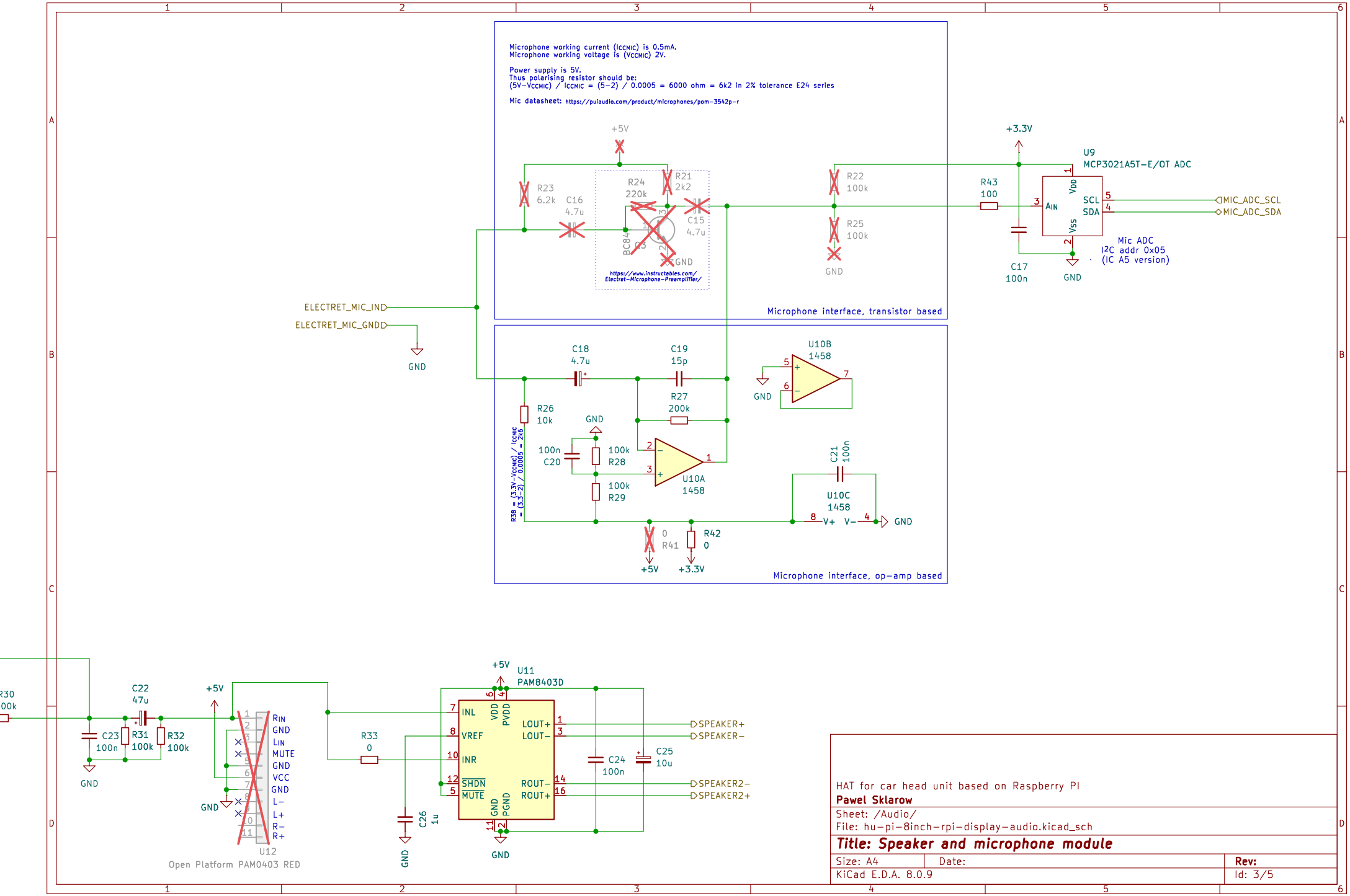
Microphone working current (Iccmic) is 0.5mA.
Microphone working voltage is (Vccmic) 2V.
Power supply is 5V.
Thus polarising resistor should be:
(5V−Vccmic) / Iccmic = (5−2) / 0.0005 = 6000 ohm = 6k2 in 2% tolerance E24 series
Mic datasheet: https://pulaudio.com/product/microphones/pom−3542p−r
+5V
R23 6.2k
C16 4.7u
R24 220k
R21 2k2
C15 4.7u
BC847
GND
https://www.instructables.com/Electret−Microphone−Preamplifier/
R22 100k
R25 100k
GND
+3.3V
R43 100
U9 MCP3021A5T−E/OT ADC
VDD
AIN
SCL
SDA
VSS
MIC_ADC_SCL
MIC_ADC_SDA
Mic ADC
I2C addr 0x05
(IC A5 version)
C17 100n
GND
ELECTRET_MIC_IND
ELECTRET_MIC_GND
GND
Microphone interface, transistor based
C18 4.7u
C19 15p
U10B 1458
GND
R26 10k
R27 200k
GND
100n C20
100k R28
100k R29
U10A 1458
R38 = (3.3V−Vccmic) / Iccmic = (3.3−2) / 0.0005 = 2k6
C21 100n
U10C 1458
V+
V−
GND
0 R41
R42 0
+5V
+3.3V
Microphone interface, op−amp based
R30 100k
C22 47u
C23 100n
R31 100k
R32 100k
GND
+5V
RIN
GND
LIN
MUTE
GND
VCC
GND
L−
L+
R−
R+
U12
Open Platform PAM0403 RED
GND
R33 0
C26 1u
GND
+5V
U11 PAM8403D
INL
VREF
INR
SHDN
MUTE
VDD
PVDD
GND
PGND
LOUT+
LOUT−
ROUT−
ROUT+
SPEAKER+
SPEAKER−
SPEAKER2−
SPEAKER2+
C24 100n
C25 10u
GND
HAT for car head unit based on Raspberry PI
Pawel Sklarow
Sheet: /Audio/
File: hu−pi−8inch−rpi−display−audio.kicad_sch
Title: Speaker and microphone module
Size: A4
Date:
Rev:
KiCad E.D.A. 8.0.9
Id: 3/5

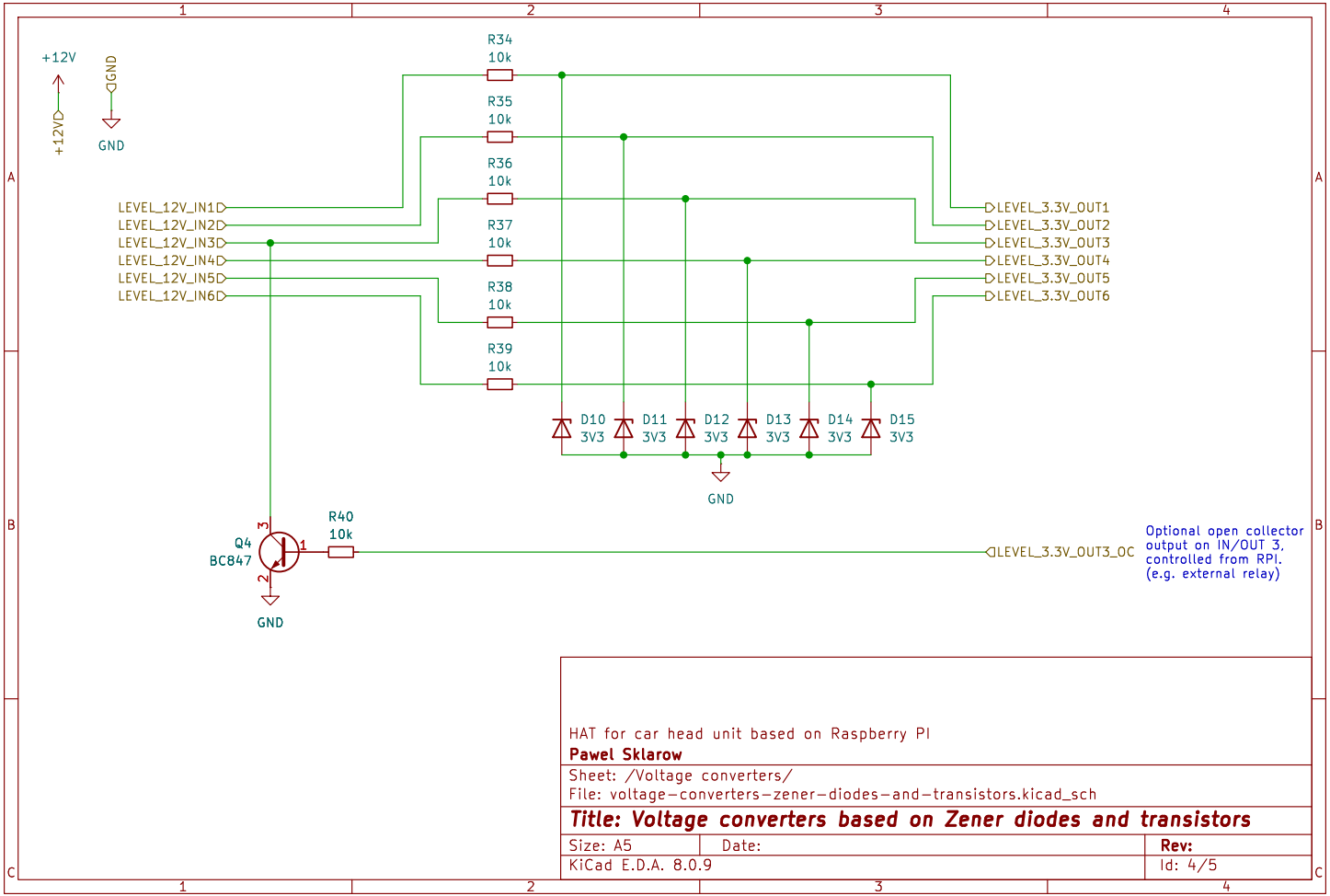


HAT for car head unit based on Raspberry PI

**Pawel Sklarow**

Sheet: /Voltage converters/

File: voltage-converters-zener-diodes-and-transistors.kicad_sch

***Title: Voltage converters based on Zener diodes and transistors***

| Size: A5 | Date: | **Rev:** |
|---|---|---|
| KiCad E.D.A. 8.0.9 | | Id: 4/5 |

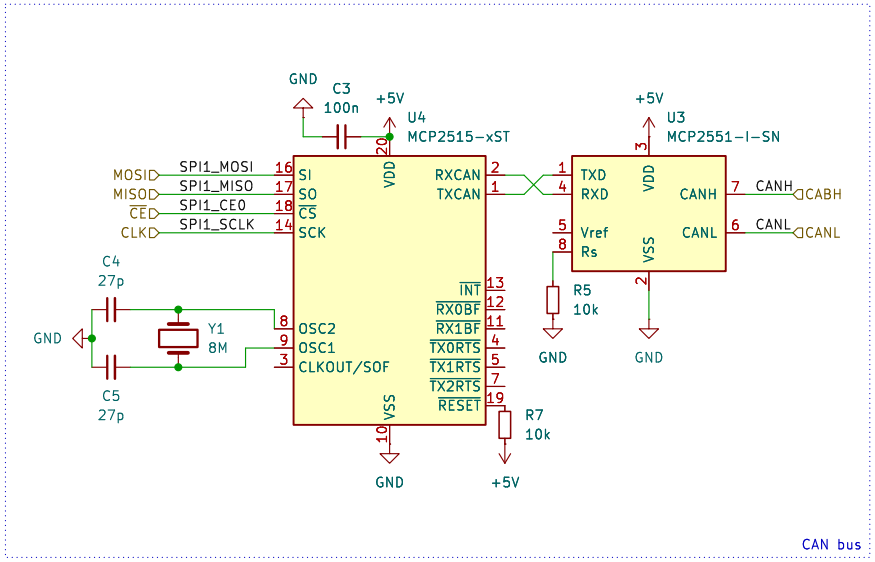


Sheet: /CAN interface/
File: hu-pi-7inch-rpi-display-can.kicad_sch

**Title:**

| Size: A4 | Date: | **Rev:** |
|---|---|---|
| KiCad E.D.A. 8.0.9 | | Id: 5/5 |