RF FRONT-END ARCHITECTURE ADS

Date: 30/11/2015

Developed by:

Prerana Shamsundar Punjabi

Table of Contents

1 Harmonic Balance Simulation WiFi RF Front-End 3
1.1 Exercise 1: Harmonic Balance for a Non-Linear system 5
2 Passive Filter: 15
3 Antenna Simulation with Momentum 24

1 Harmonic Balance Simulation WiFi RF Front-End

Reference

Harmonics are associated with non-linear loads which draws non-sinusoidal currents from an essentially sinusoidal voltage source. Anything that takes in AC power and converts into DC will cause harmonics (are stated as non-linear loads).

Now consider the below:

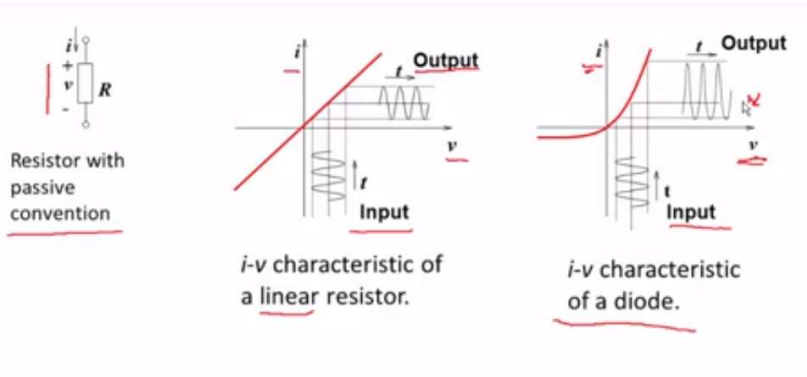

A linear resistor if we apply a sinusoid at a freq f1 in the input we will get a sinusoid with the same freq at the output with no harmonic at the output

A non-linear element says diode (a diode has an exponential relation between current vs voltage) If we applied a sinusoid at the input then at the output we will get a sinusoid with harmonics. Now if we apply a signal with 2 tones (2 sinusoid) of freq at the input, at the output we will get a signal with those 2 discrete tones + harmonics of those 2 tones + the modulation freq of those 2 tones (i.e. the sum and differences of those 2 tones)

A **Harmonic Balance simulation** is used to compensate the non-linear behavior of the signal, also the **HBS allow spectral analysis**. Harmonic balance is one of the **ways to analyzing the steady state response** of the circuit.

Signal Modulation is used because some data signals are not always suitable for direct transmission, but the modulated signal may be more suitable. **Modulation** is a process of mixing a signal with a sinusoid to produce a new signal. The sinusoidal signal that is used in the modulation is known as the **carrier signal**. The signal that is used in modulating the carrier signal (or sinusoidal signal) is known as the "data signal" or the "message signal". Radio and television broadcasts and satellite radio typically use AM or FM. Most two-way radios use FM, although some employ a mode known as **single sideband** (SSB).

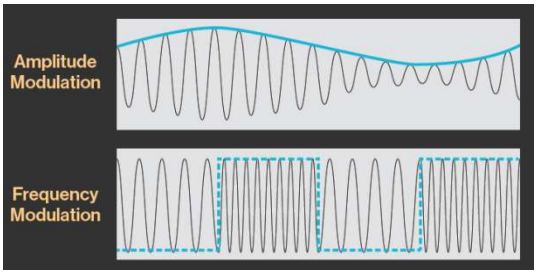

- Amplitude modulation (AM), in which the height (i.e., the strength or intensity) of the signal carrier is varied to represent the data being added to the signal.
- Frequency modulation (FM), in which the frequency of the carrier waveform is varied to reflect the frequency of the data.

Sometimes a carrier signal can carry more than one modulating information stream. A process called multiplexing combines the streams onto a single carrier e.g., by encoding a fixed-duration segment of one, then of the next, for example, cycling through all channels before returning to the first, a process called time-division multiplexing (TDM).

In HBS it is considered that the signal in the circuit is a sum of sinusoids and each of those sinusoids could have any amplitude.

The reason why HBS are considered as in Microwave circuits as the large part of the circuit is linear with only few parts of non-linear elements (i.e. the circuits contain very few diodes and transistors). Since there are fixed numbers of sinusoid we can characterize the external characteristics of the linear circuit using their S & Y parameters, we do not need to solve the every part of the linear circuit. So only those bits are solved where the circuit is non-linear, hence it is simpler.

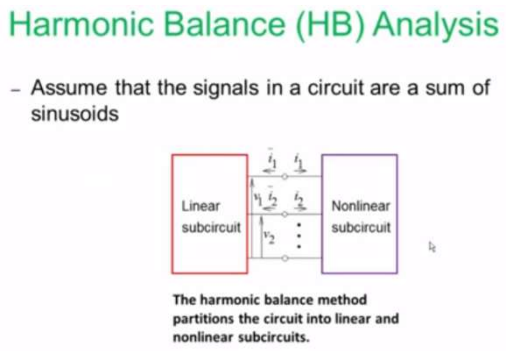

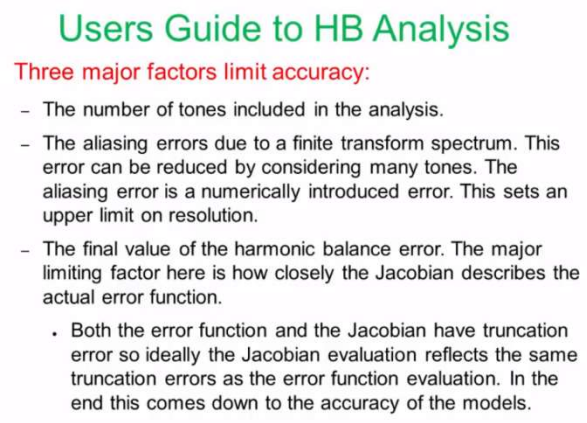

1.1 Exercise 1: Harmonic Balance for a Non-Linear system

1'st Order Harmonic Balance Simulation – with a Low Noise Amplifier

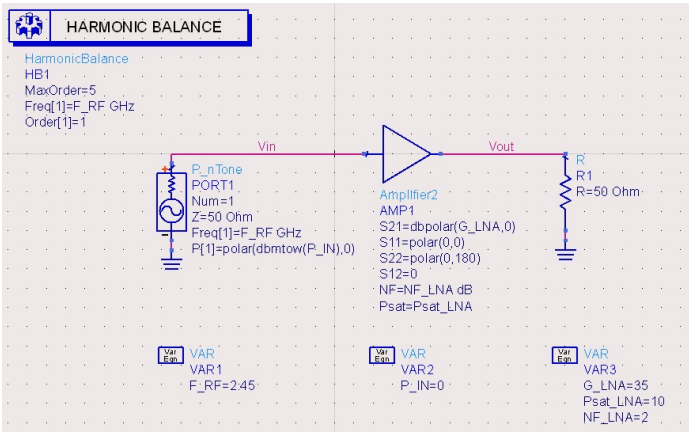

The cut off frequency is specified as 2.45 GHz. The Output follows the input but is amplified due to the amplifier effect.

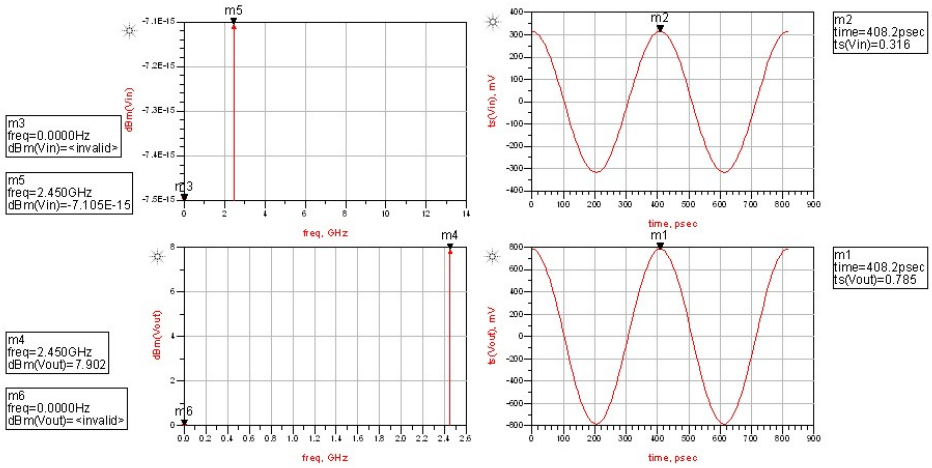

Higher order simulations are done to compare the results

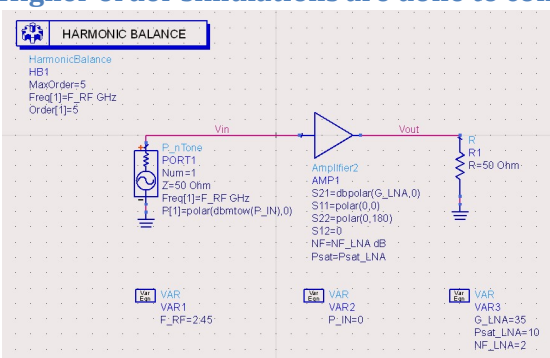

It is observed that as the order increases many more Harmonics are introduced, Vout of the signal is around 9.97db and does not increase further though the gain of the amplifier is 35db as the Psat value is 10 db.

The Harmonic Balance Simulation is illustrated using a Low Noise Amplifier (LNA). This implies that we want to amplify our low freq signal. But since the NF is not 0 even the harmonics present in the input signal will be amplified too. Additionally the LNA chosen here has a Psat as 10db so even if the gain of the amplifier is 35db the signal cannot be amplified more than 10db.

5'th Order Harmonic Balance Simulation

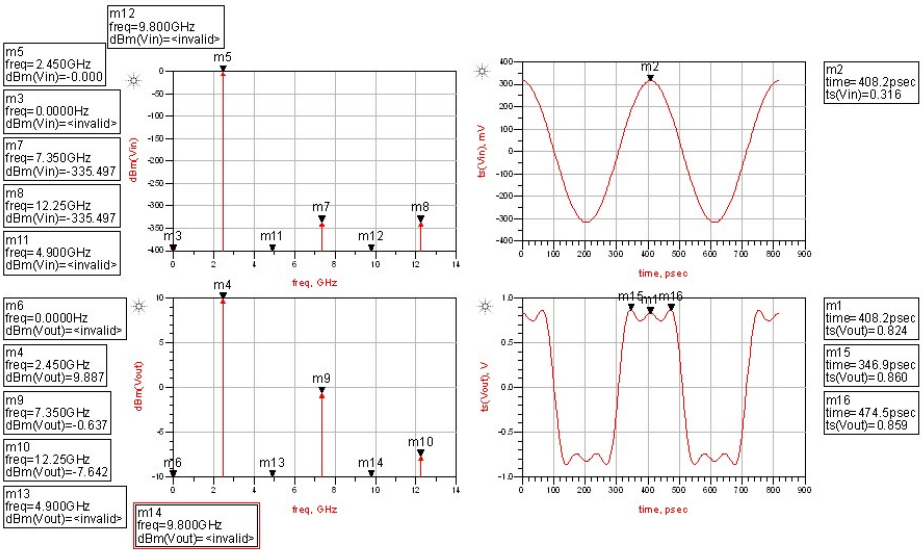

8'th Order Harmonic Balance Simulation – Better response than order 5, but further harmonics are added

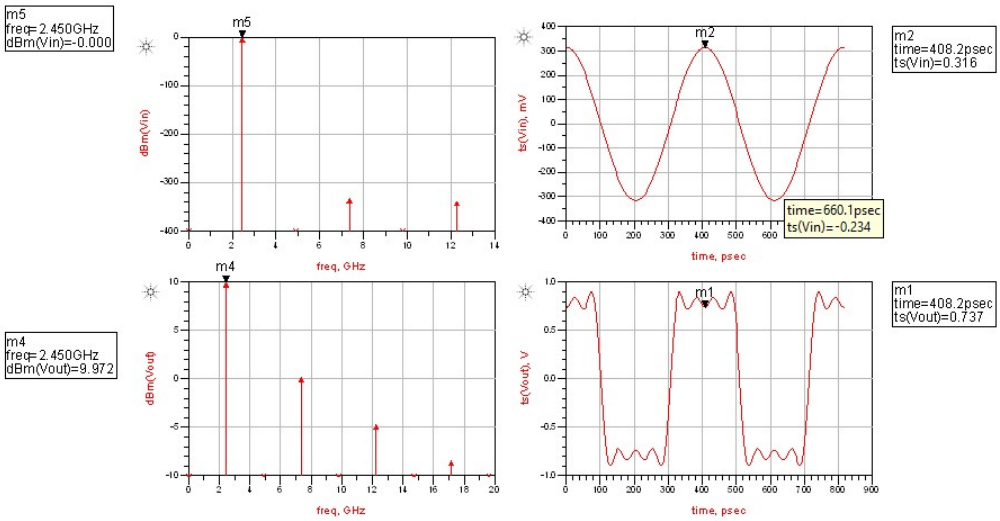

15'th Order Harmonic Balance Simulation

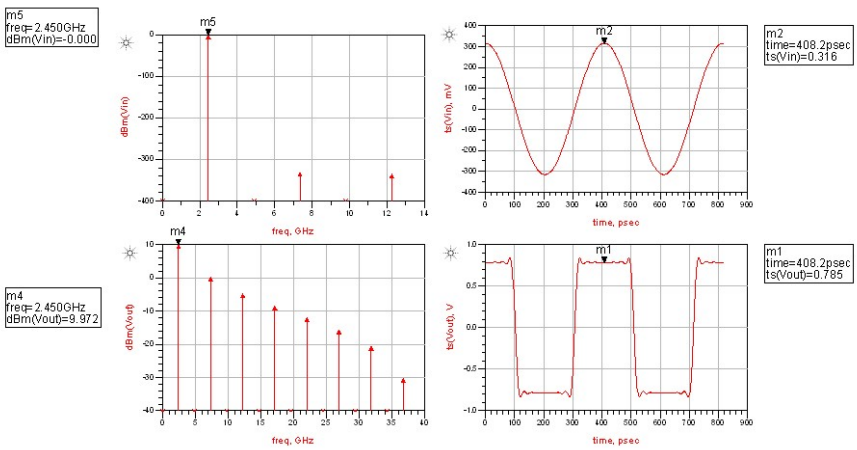

The Reception Antenna represented by a spectral source operating at 2.45GHz, the channel transposes the high frequency signal into lower frequency signal of 600MHz (FI signal) used by analogic channel. This can be done using a Mixer.

1'st Order Harmonic Balance Simulation with a Mixer - The equation for defining OL frequency as the RF and FI frequency specified in variables is $F_{fi} = F_{ol} - F_{rf}$. The additional signals seen are as an effect of the mixer. As we increase the order we will observe the signal at cutoff frequency the The signals due to mixer effect (at 1.85GHz and 3.05 GHz) and the harmonics due to each of them.

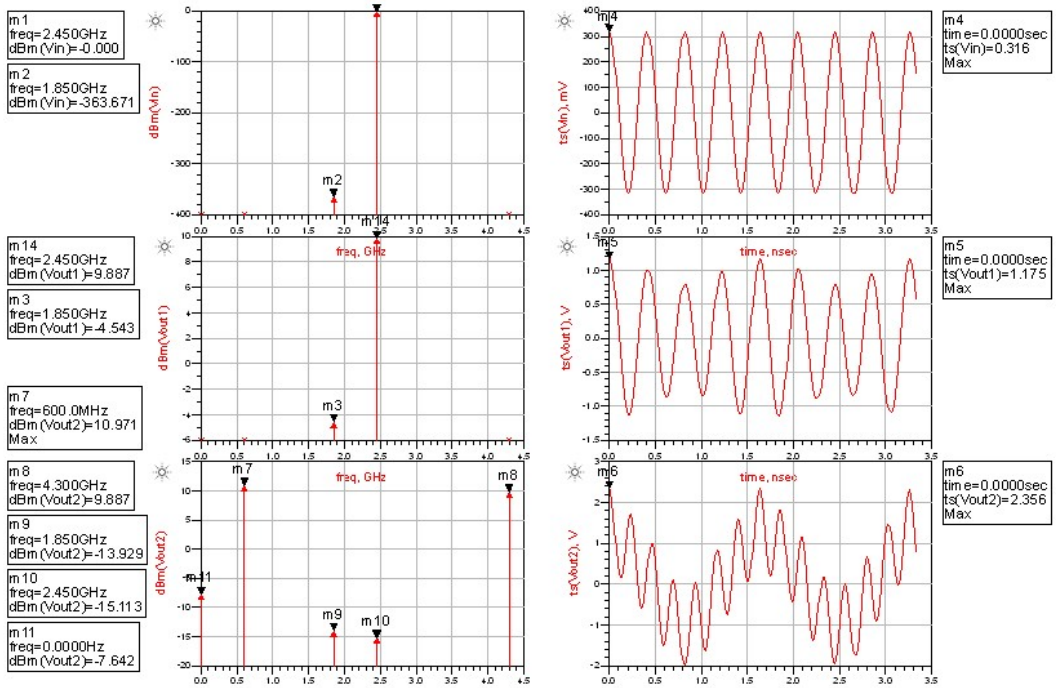

3'rd Order Harmonic Balance Simulation with a Mixer

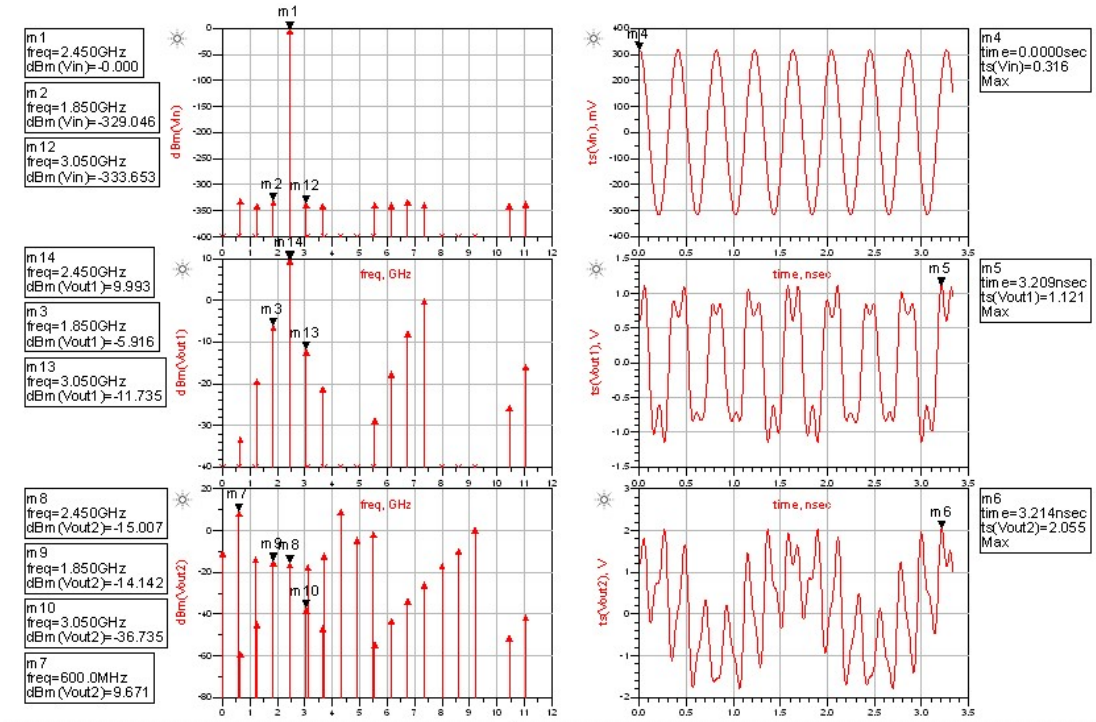

5'th Order Harmonic Balance Simulation with a Mixer

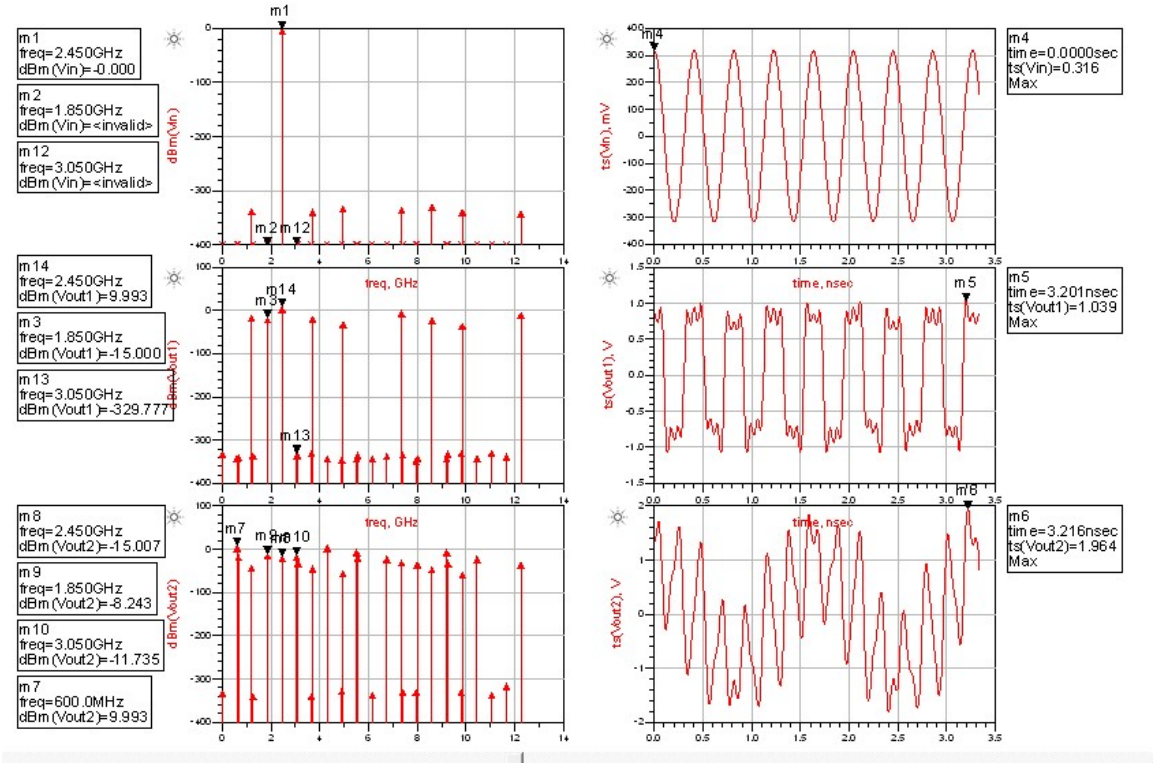

9'th Order Harmonic Balance Simulation with a Mixer

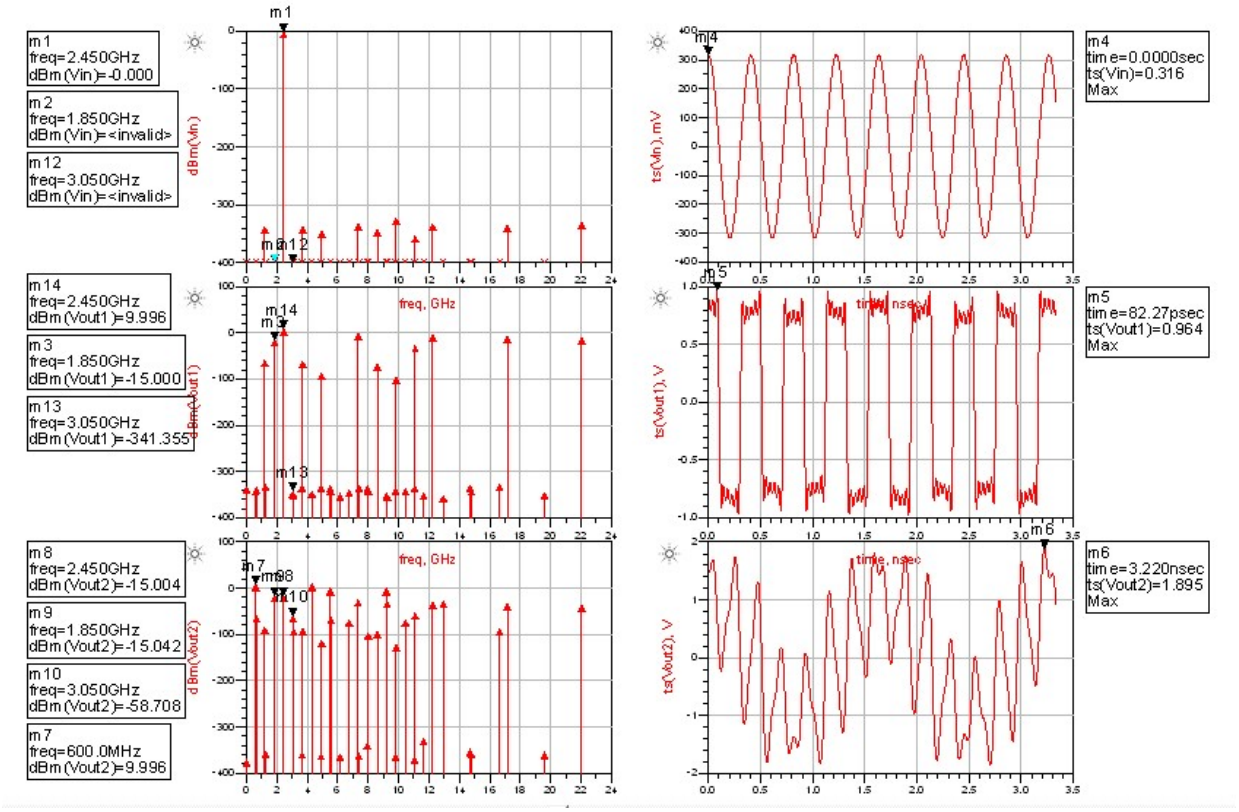

We observe a stabilization of the FI power around order 13. Hence for further the HBS is set to order 13.

A Filter is added after the amplifier inorder to cutoff the higher frequency noise.

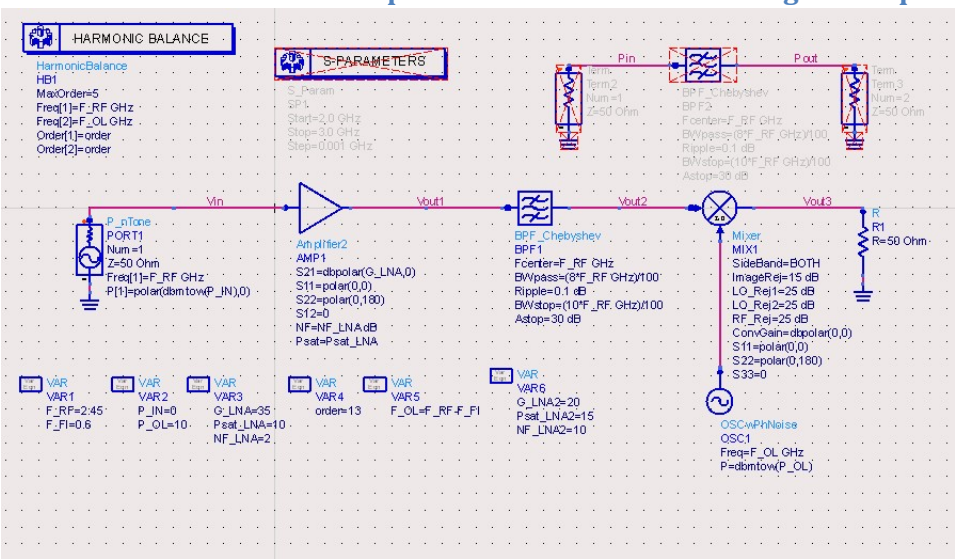

Various output waveforms and each component output is as shown below:

Input vs Output from the Amplifier - <u>(Vin vs Vout1)</u>

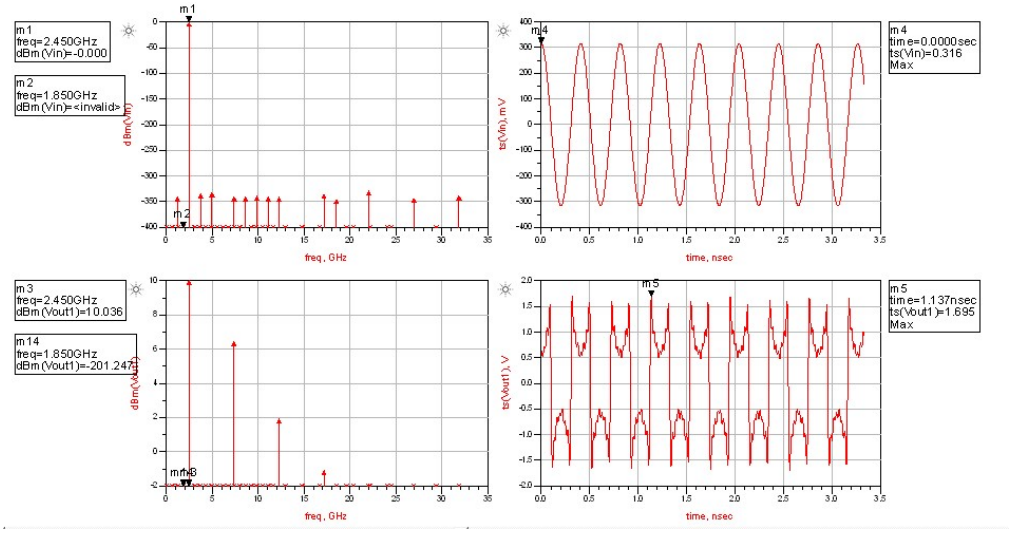

Output from the Amplifier vs Output from The Filter – <u>(Vout1 vs Vout2)</u>

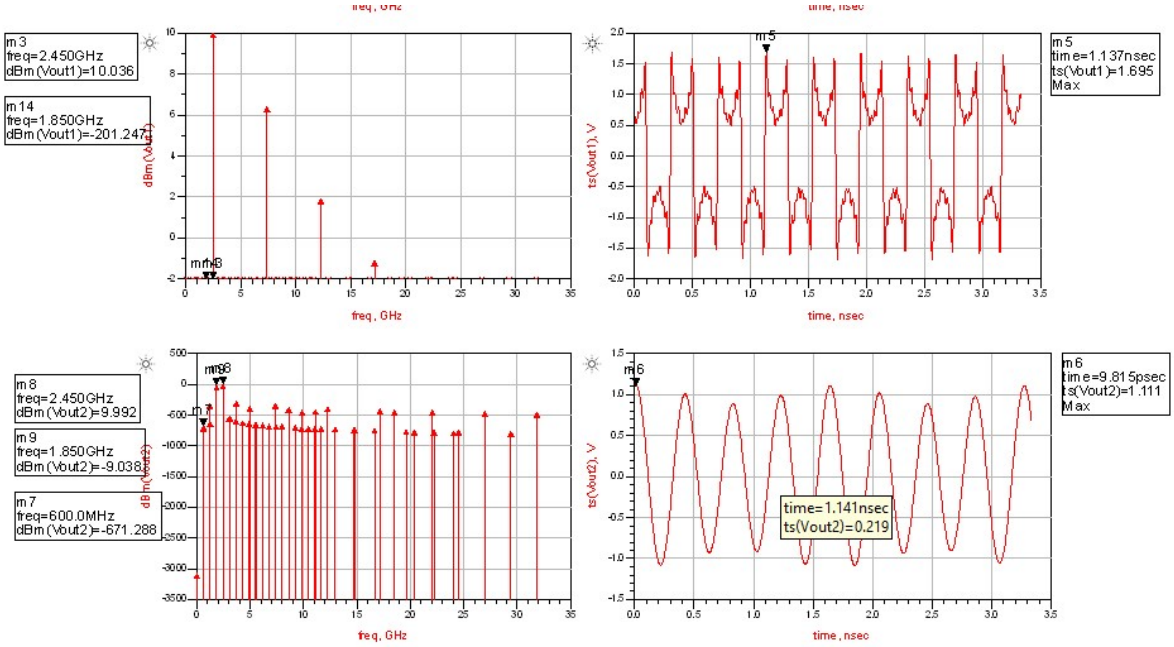

Output from The Filter vs Output from the Mixer – (Vout2 vs Vout3)

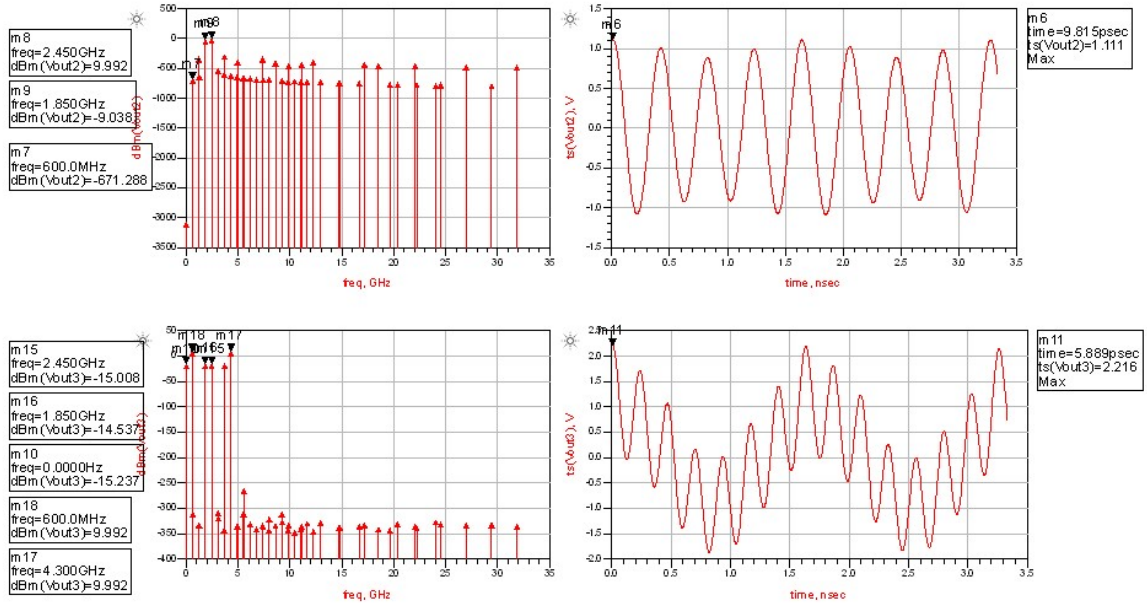

Filter's S- Parameter Analysis

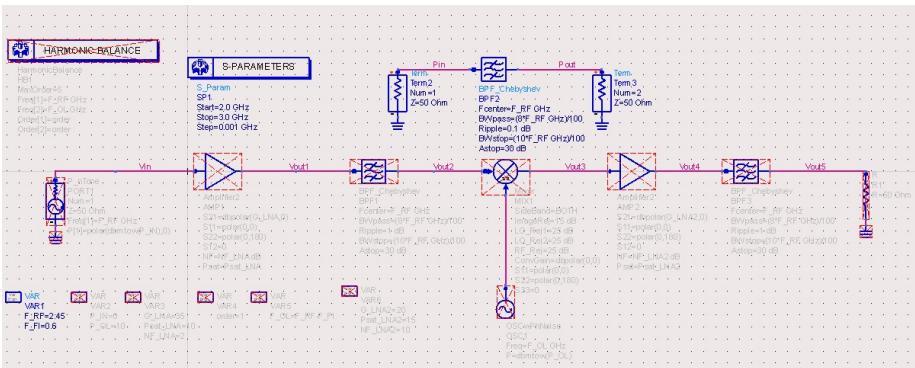

The filter is of order 9

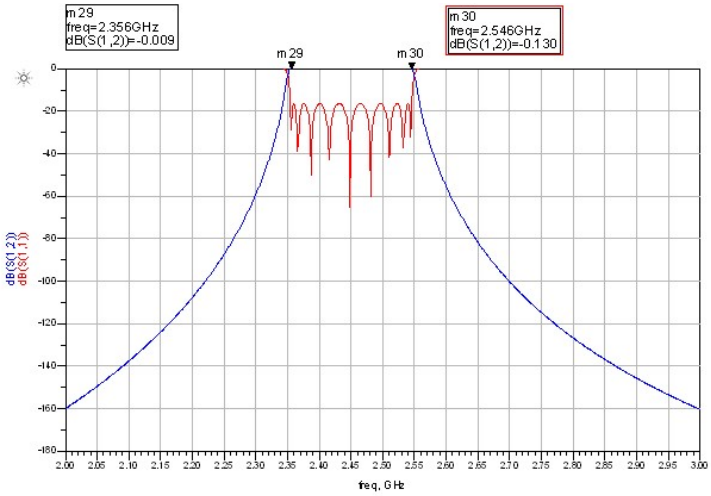

An Amplifier is added to compensate the effect of the filter.

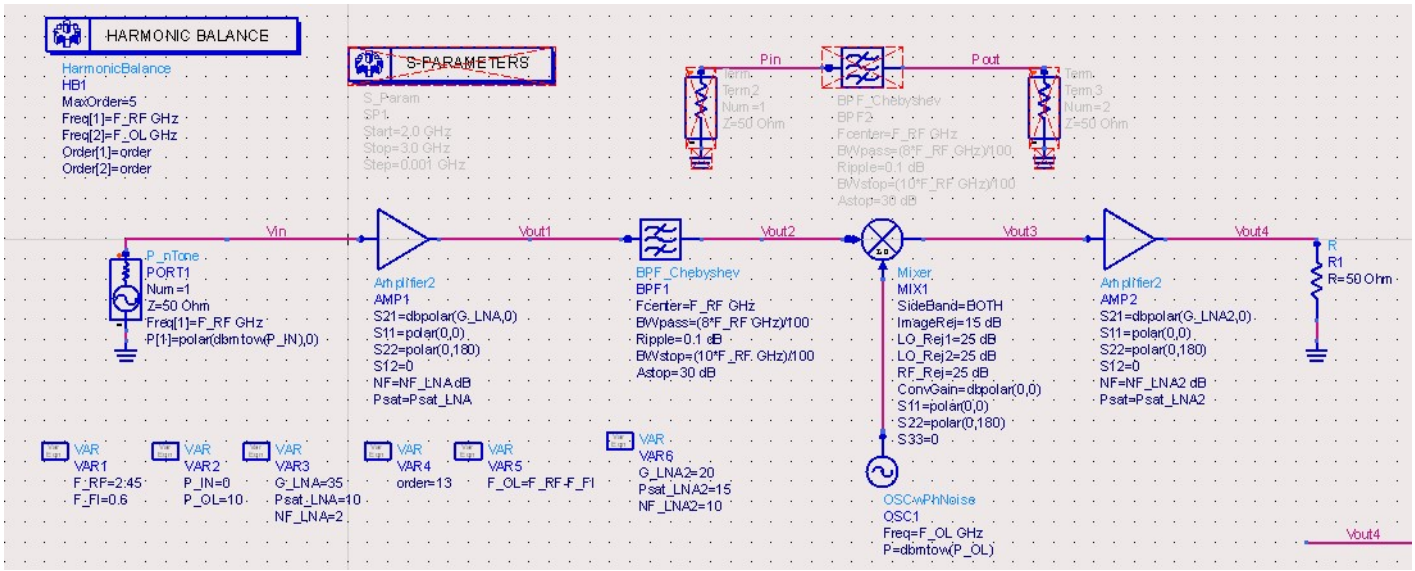

Output from the Mixer vs Output from the 2'nd Amplifier – (Vout3 vs Vout4) – We can observe that the amplifier output is not much helpful as it also it also amplifies unwanted signals too.

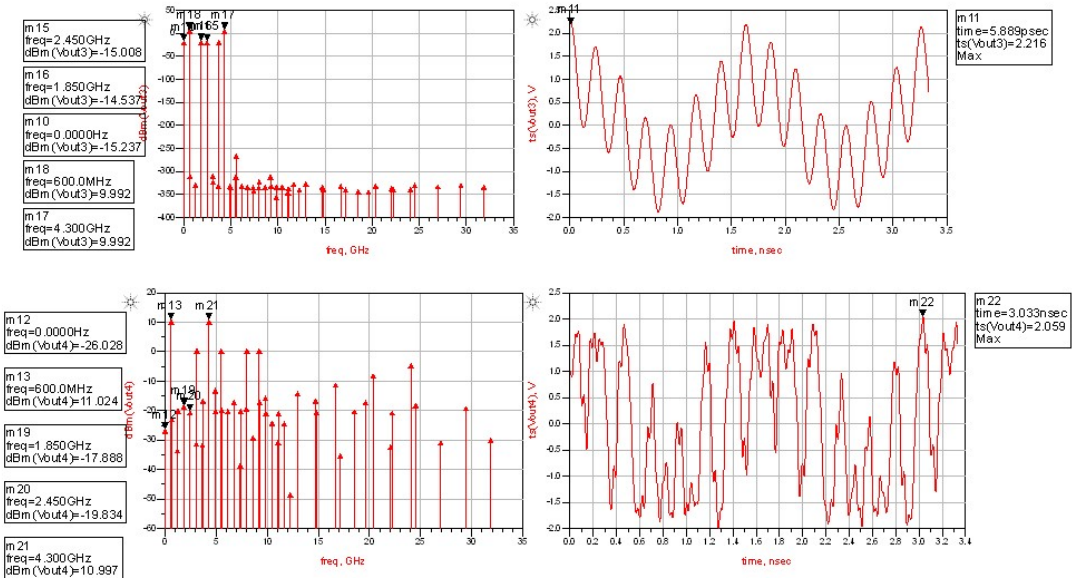

An additional filter is added after the second amplifier. This filter now will be able to filter out the noises that was amplified and fed in as Input.

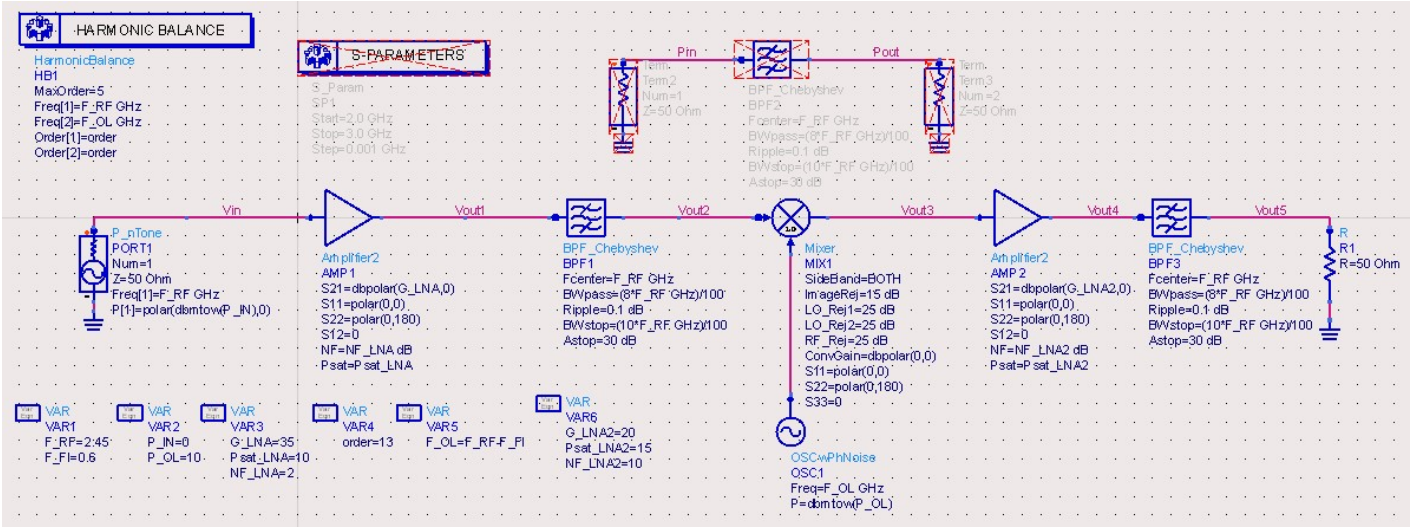

Output from the 2'nd Amplifier vs Output from the Filter – (Vout4 vs Vout5) – With this we now observe that we get a good response at the output without any harmonics or signals due to non-linear elements.

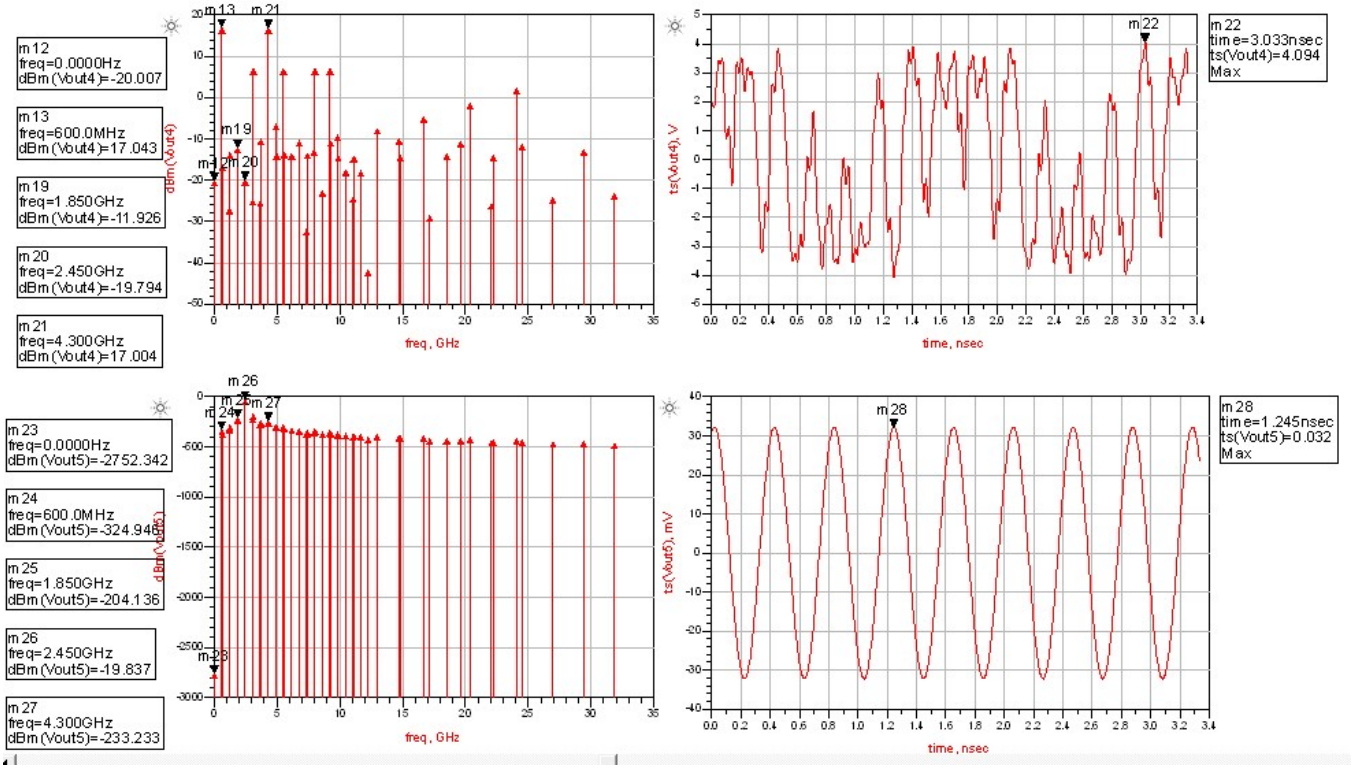

5th Order Multiple Frequency Input Simulation

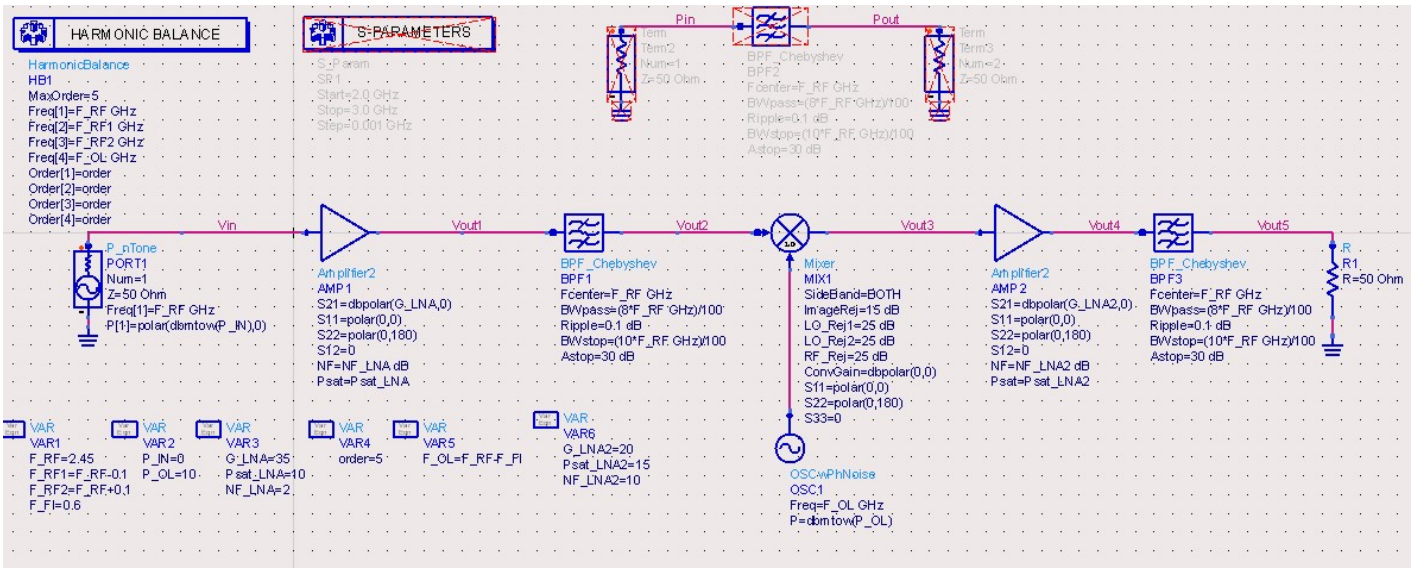

Input vs Output from the Amplifier - (Vin vs Vout1)

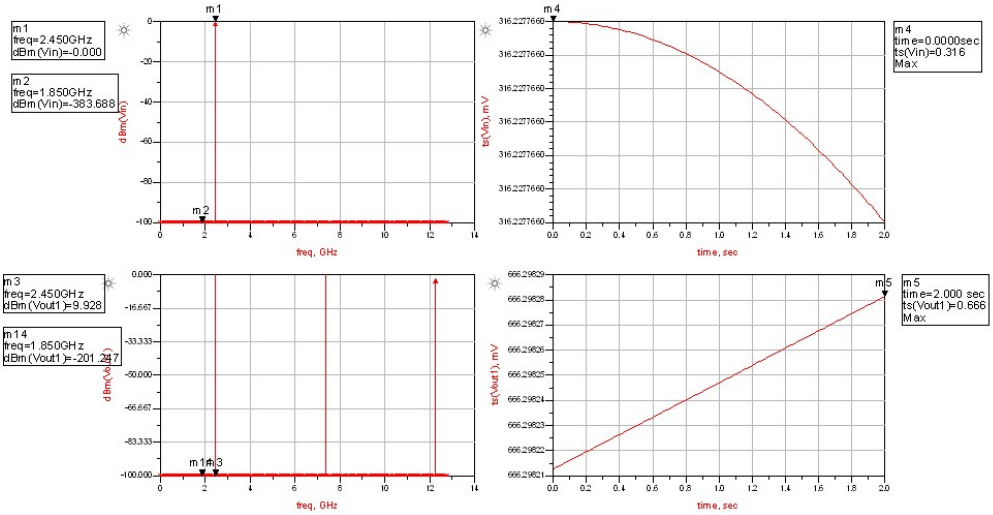

Output from the Amplifier vs Output from The Mixer – (Vout1 vs Vout2)

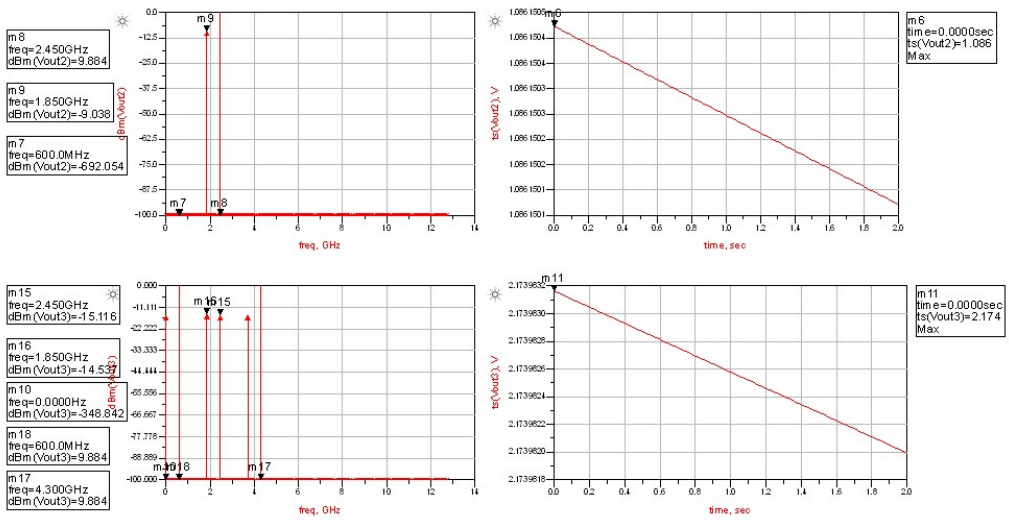

Output from The Filter vs Output from the Mixer – (Vout2 vs Vout3)

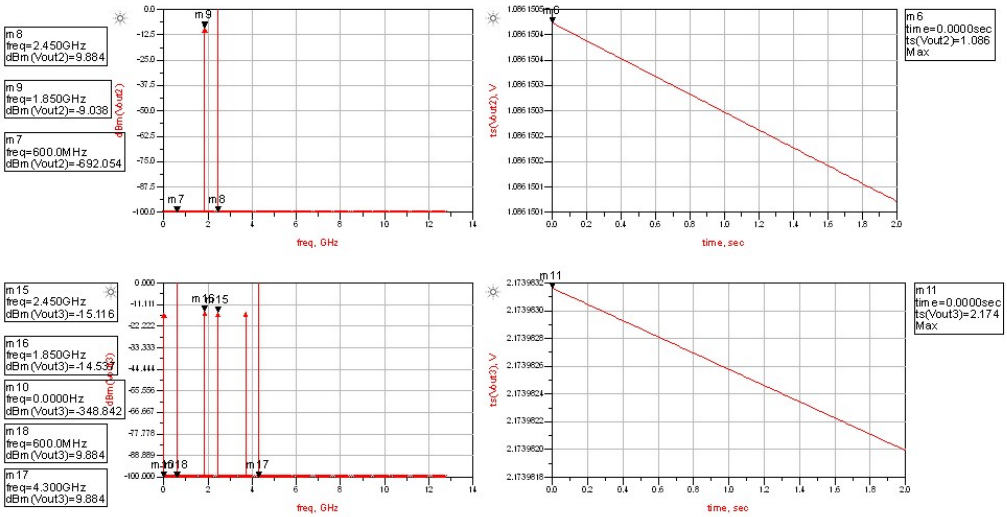

Output from The Mixer vs Output from the Amplifier – (Vout3 vs Vout4)

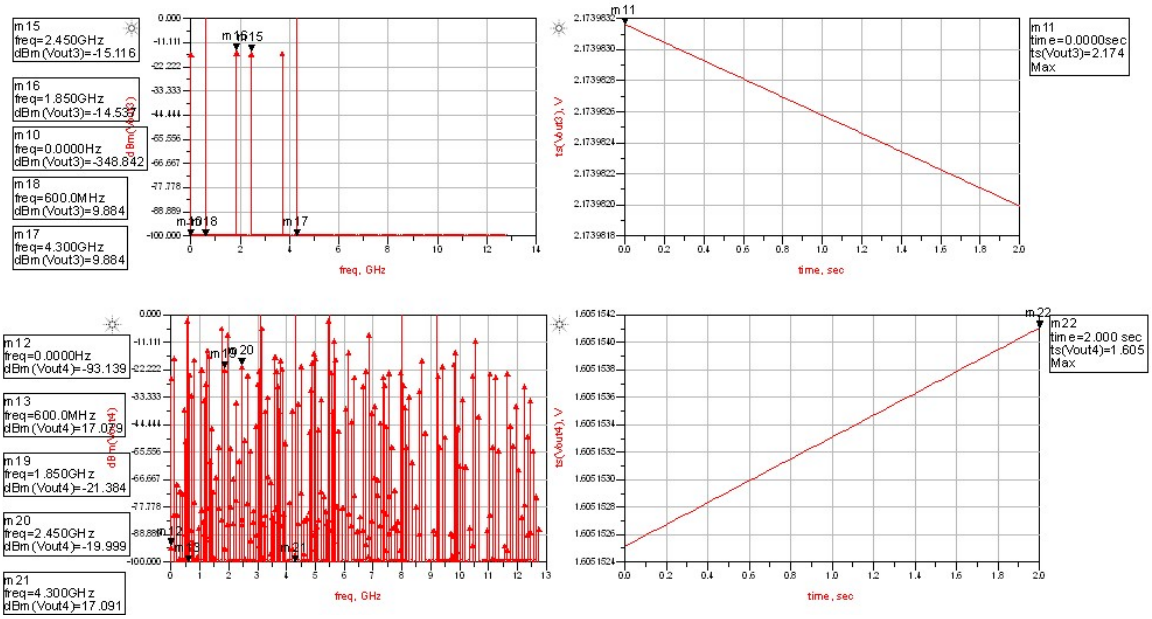

Output from the Amplifier vs Output from the filter – (Vout4 vs Vout5)

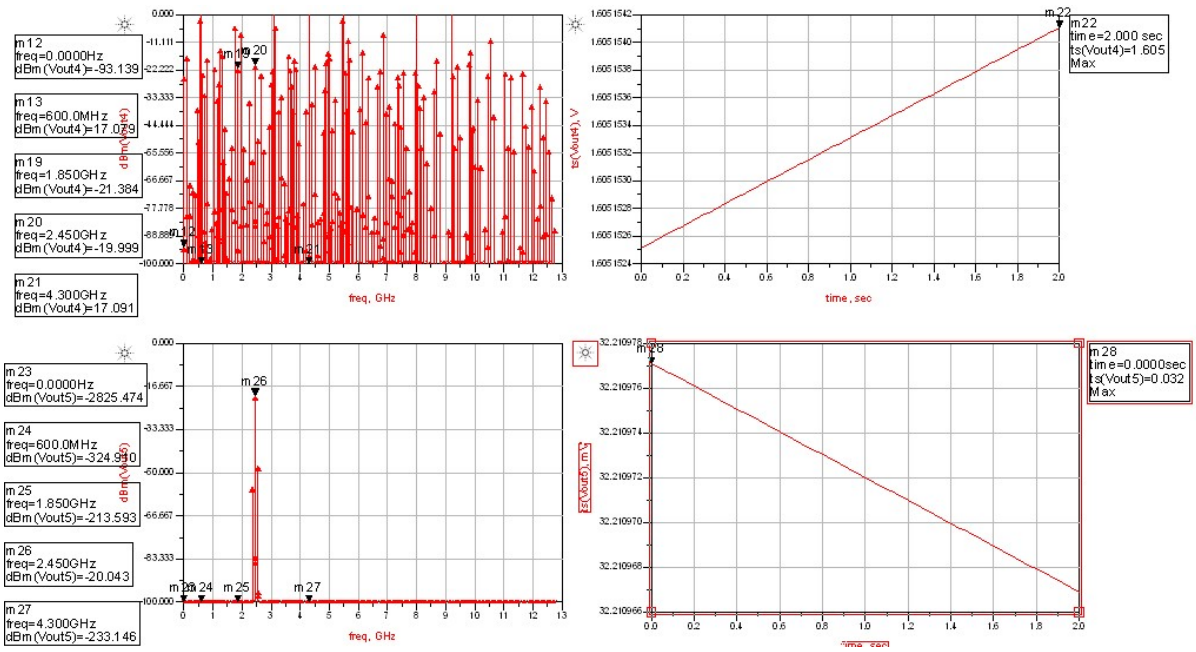

2 Passive Filter:

Lumped components: LC Lowpass Filters (or Anti-Aliasing Filters) -

- Impedance is the AC version of Resistance
- Impedance of a Resister is Zr = R
- Impedance of a Capacitor Is Zc = 1/jwc

<u>In the Lowpass LC Circuit</u>: The inductor tends to have more and more attenuation as the frequency goes higher and less and less attenuation at lower frequencies. Whereas the Capacitor has higher Impedance at lower frequencies and lower Impedance at higher frequencies.

There are 3 configurations for the LC Lowpass network.

The L Network, the Pi Network and the Pi-L Network– The Pi-L network has the sharpest response, then the Pi Network and at last the L Network.

Design of a Lowpass Filter (order 3) using LC-Lumped Components:

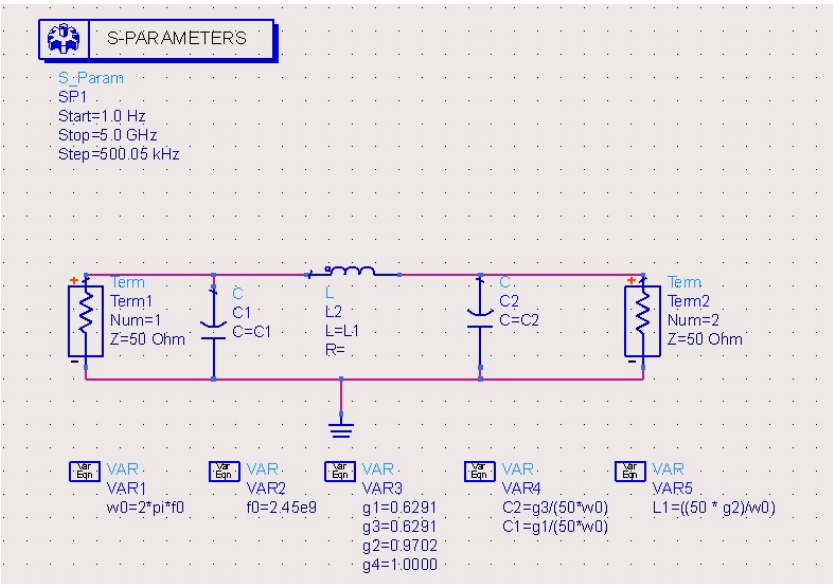

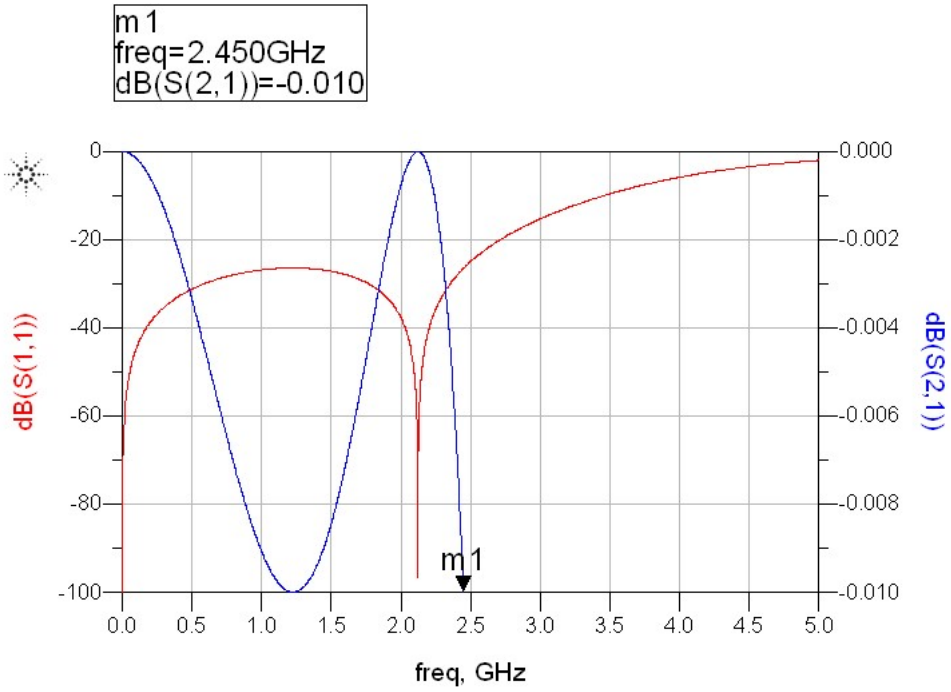

The following at the Inductance and Capacitance Values

freq	L1	C2	C1
1.000 Hz	3.151E-9	8.173E-13	8.173E-13
500.1 k Hz	3.151E-9	8.173E-13	8.173E-13
1.000 MHz	3.151E-9	8.173E-13	8.173E-13
1.500 MHz	3.151E-9	8.173E-13	8.173E-13
2.000 MHz	3.151E-9	8.173E-13	8.173E-13
2.500 MHz	3.151E-9	8.173E-13	8.173E-13
3.000 MHz	3.151E-9	8.173E-13	8.173E-13
3.500 MHz	3.151E-9	8.173E-13	8.173E-13
4.000 MHz	3.151E-9	8.173E-13	8.173E-13
4.500 MHz	3.151E-9	8.173E-13	8.173E-13
5.001 MHz	3.151E-9	8.173E-13	8.173E-13
5.501 MHz	3.151E-9	8.173E-13	8.173E-13
6.001 MHz	3.151E-9	8.173E-13	8.173E-13
6.501 MHz	3.151E-9	8.173E-13	8.173E-13
7.001 MHz	3.151E-9	8.173E-13	8.173E-13
7.501 MHz	3.151E-9	8.173E-13	8.173E-13
8.001 MHz	3.151E-9	8.173E-13	8.173E-13
8.501 MHz	3.151E-9	8.173E-13	8.173E-13
9.001 MHz	3.151E-9	8.173E-13	8.173E-13
9.501 MHz	3.151E-9	8.173E-13	8.173E-13
10.00 MHz	3.151E-9	8.173E-13	8.173E-13
10.50 MHz	3.151E-9	8.173E-13	8.173E-13
11.00 MHz	3.151E-9	8.173E-13	8.173E-13
11.50 MHz	3.151E-9	8.173E-13	8.173E-13
12.00 MHz	3.151E-9	8.173E-13	8.173E-13
12.50 MHz	3.151E-9	8.173E-13	8.173E-13
13.00 MHz	3.151E-9	8.173E-13	8.173E-13
13.50 MHz	3.151E-9	8.173E-13	8.173E-13
14.00 MHz	3.151E-9	8.173E-13	8.173E-13
14.50 MHz	3.151E-9	8.173E-13	8.173E-13
15.00 MHz	3.151E-9	8.173E-13	8.173E-13
15.50 MHz	3.151E-9	8.173E-13	8.173E-13
16.00 MHz	3.151E-9	8.173E-13	8.173E-13
16.50 MHz	3.151E-9	8.173E-13	8.173E-13
17.00 MHz	3.151E-9	8.173E-13	8.173E-13
17.50 MHz	3.151E-9	8.173E-13	8.173E-13
18.00 MHz	3.151E-9	8.173E-13	8.173E-13
18.50 MHz	3.151E-9	8.173E-13	8.173E-13
19.00 MHz	3.151E-9	8.173E-13	8.173E-13
19.50 MHz	3.151E-9	8.173E-13	8.173E-13
20.00 MHz	3.151E-9	8.173E-13	8.173E-13
20.50 MHz	3.151E-9	8.173E-13	8.173E-13
21.00 MHz	3.151E-9	8.173E-13	8.173E-13
21.50 MHz	3.151E-9	8.173E-13	8.173E-13
22.00 MHz	3.151E-9	8.173E-13	8.173E-13
22.50 MHz	3.151E-9	8.173E-13	8.173E-13
23.00 MHz	3.151E-9	8.173E-13	8.173E-13
23.50 MHz	3.151E-9	8.173E-13	8.173E-13
24.00 MHz	3.151E-9	8.173E-13	8.173E-13
24.50 MHz	3.151E-9	8.173E-13	8.173E-13
25.00 MHz	3.151E-9	8.173E-13	8.173E-13

Design of a BandPass filter (order 3) using LC Lumped Components:

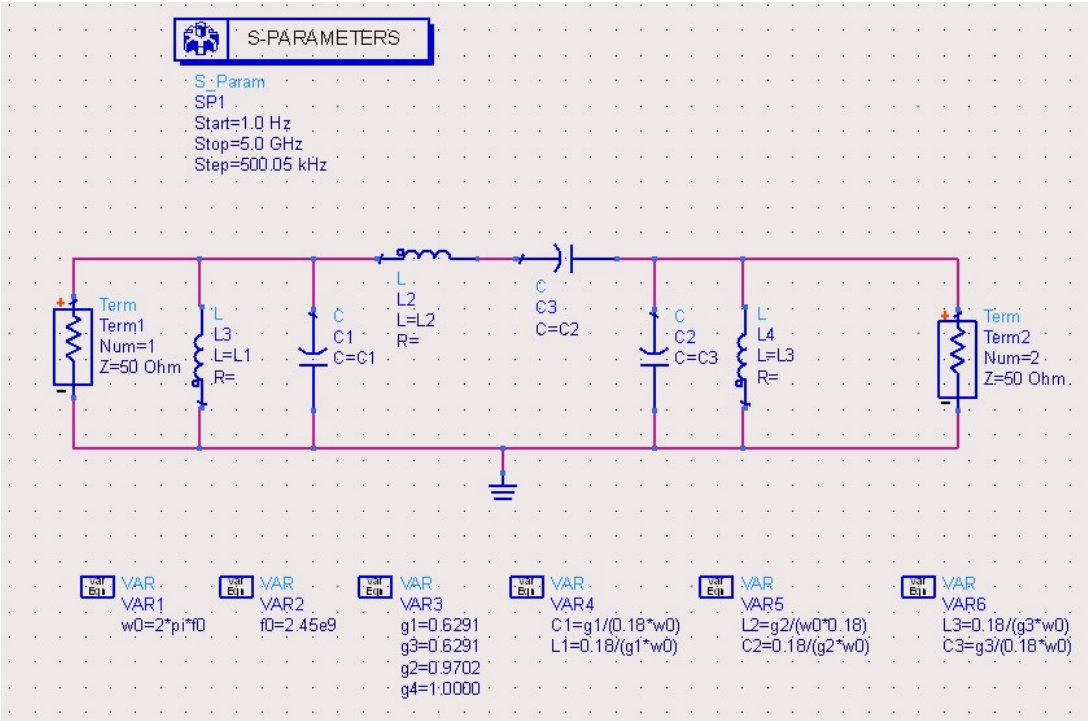

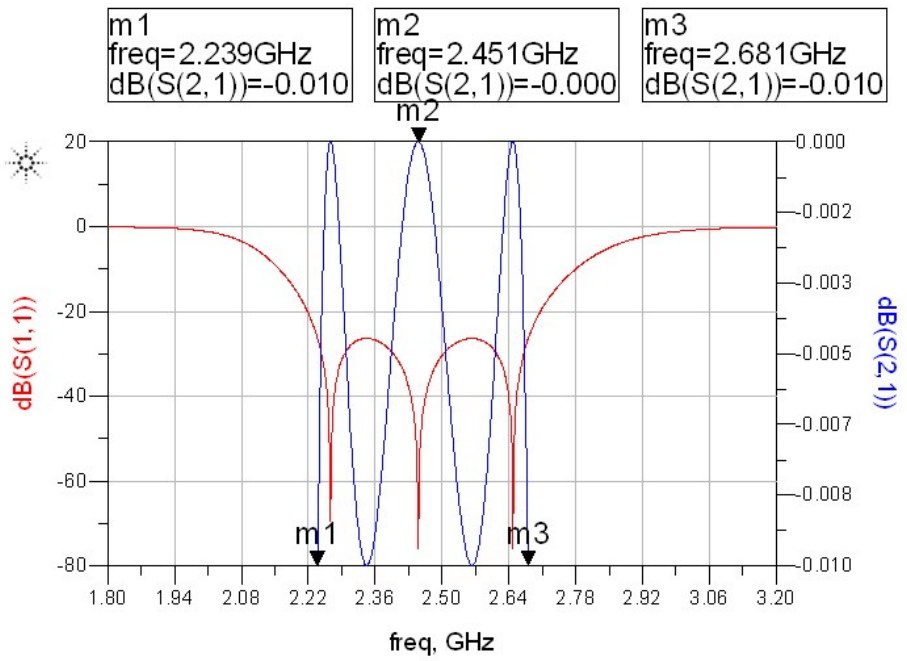

The following at the Inductance and Capacitance Values

freq	C1	C2	C3	L1	L2	L3
1.000 Hz	2.270E-10	1.205E-11	2.270E-10	1.859E-11	3.501E-10	1.859E-11
500.1 kHz	2.270E-10	1.205E-11	2.270E-10	1.859E-11	3.501E-10	1.859E-11
1.000 MHz	2.270E-10	1.205E-11	2.270E-10	1.859E-11	3.501E-10	1.859E-11
1.500 MHz	2.270E-10	1.205E-11	2.270E-10	1.859E-11	3.501E-10	1.859E-11
2.000 MHz	2.270E-10	1.205E-11	2.270E-10	1.859E-11	3.501E-10	1.859E-11
2.500 MHz	2.270E-10	1.205E-11	2.270E-10	1.859E-11	3.501E-10	1.859E-11
3.000 MHz	2.270E-10	1.205E-11	2.270E-10	1.859E-11	3.501E-10	1.859E-11
3.500 MHz	2.270E-10	1.205E-11	2.270E-10	1.859E-11	3.501E-10	1.859E-11
4.000 MHz	2.270E-10	1.205E-11	2.270E-10	1.859E-11	3.501E-10	1.859E-11
4.500 MHz	2.270E-10	1.205E-11	2.270E-10	1.859E-11	3.501E-10	1.859E-11
5.001 MHz	2.270E-10	1.205E-11	2.270E-10	1.859E-11	3.501E-10	1.859E-11
5.501 MHz	2.270E-10	1.205E-11	2.270E-10	1.859E-11	3.501E-10	1.859E-11
6.001 MHz	2.270E-10	1.205E-11	2.270E-10	1.859E-11	3.501E-10	1.859E-11
6.501 MHz	2.270E-10	1.205E-11	2.270E-10	1.859E-11	3.501E-10	1.859E-11
7.001 MHz	2.270E-10	1.205E-11	2.270E-10	1.859E-11	3.501E-10	1.859E-11
7.501 MHz	2.270E-10	1.205E-11	2.270E-10	1.859E-11	3.501E-10	1.859E-11
8.001 MHz	2.270E-10	1.205E-11	2.270E-10	1.859E-11	3.501E-10	1.859E-11
8.501 MHz	2.270E-10	1.205E-11	2.270E-10	1.859E-11	3.501E-10	1.859E-11
9.001 MHz	2.270E-10	1.205E-11	2.270E-10	1.859E-11	3.501E-10	1.859E-11
9.501 MHz	2.270E-10	1.205E-11	2.270E-10	1.859E-11	3.501E-10	1.859E-11
10.00 MHz	2.270E-10	1.205E-11	2.270E-10	1.859E-11	3.501E-10	1.859E-11
10.50 MHz	2.270E-10	1.205E-11	2.270E-10	1.859E-11	3.501E-10	1.859E-11
11.00 MHz	2.270E-10	1.205E-11	2.270E-10	1.859E-11	3.501E-10	1.859E-11
11.50 MHz	2.270E-10	1.205E-11	2.270E-10	1.859E-11	3.501E-10	1.859E-11
12.00 MHz	2.270E-10	1.205E-11	2.270E-10	1.859E-11	3.501E-10	1.859E-11
12.50 MHz	2.270E-10	1.205E-11	2.270E-10	1.859E-11	3.501E-10	1.859E-11
13.00 MHz	2.270E-10	1.205E-11	2.270E-10	1.859E-11	3.501E-10	1.859E-11
13.50 MHz	2.270E-10	1.205E-11	2.270E-10	1.859E-11	3.501E-10	1.859E-11
14.00 MHz	2.270E-10	1.205E-11	2.270E-10	1.859E-11	3.501E-10	1.859E-11
14.50 MHz	2.270E-10	1.205E-11	2.270E-10	1.859E-11	3.501E-10	1.859E-11
15.00 MHz	2.270E-10	1.205E-11	2.270E-10	1.859E-11	3.501E-10	1.859E-11
15.50 MHz	2.270E-10	1.205E-11	2.270E-10	1.859E-11	3.501E-10	1.859E-11
16.00 MHz	2.270E-10	1.205E-11	2.270E-10	1.859E-11	3.501E-10	1.859E-11
16.50 MHz	2.270E-10	1.205E-11	2.270E-10	1.859E-11	3.501E-10	1.859E-11
17.00 MHz	2.270E-10	1.205E-11	2.270E-10	1.859E-11	3.501E-10	1.859E-11
17.50 MHz	2.270E-10	1.205E-11	2.270E-10	1.859E-11	3.501E-10	1.859E-11
18.00 MHz	2.270E-10	1.205E-11	2.270E-10	1.859E-11	3.501E-10	1.859E-11
18.50 MHz	2.270E-10	1.205E-11	2.270E-10	1.859E-11	3.501E-10	1.859E-11
19.00 MHz	2.270E-10	1.205E-11	2.270E-10	1.859E-11	3.501E-10	1.859E-11
19.50 MHz	2.270E-10	1.205E-11	2.270E-10	1.859E-11	3.501E-10	1.859E-11
20.00 MHz	2.270E-10	1.205E-11	2.270E-10	1.859E-11	3.501E-10	1.859E-11
20.50 MHz	2.270E-10	1.205E-11	2.270E-10	1.859E-11	3.501E-10	1.859E-11
21.00 MHz	2.270E-10	1.205E-11	2.270E-10	1.859E-11	3.501E-10	1.859E-11
21.50 MHz	2.270E-10	1.205E-11	2.270E-10	1.859E-11	3.501E-10	1.859E-11
22.00 MHz	2.270E-10	1.205E-11	2.270E-10	1.859E-11	3.501E-10	1.859E-11
22.50 MHz	2.270E-10	1.205E-11	2.270E-10	1.859E-11	3.501E-10	1.859E-11
23.00 MHz	2.270E-10	1.205E-11	2.270E-10	1.859E-11	3.501E-10	1.859E-11
23.50 MHz	2.270E-10	1.205E-11	2.270E-10	1.859E-11	3.501E-10	1.859E-11
24.00 MHz	2.270E-10	1.205E-11	2.270E-10	1.859E-11	3.501E-10	1.859E-11
24.50 MHz	2.270E-10	1.205E-11	2.270E-10	1.859E-11	3.501E-10	1.859E-11
25.00 MHz	2.270E-10	1.205E-11	2.270E-10	1.859E-11	3.501E-10	1.859E-11
25.50 MHz	2.270E-10	1.205E-11	2.270E-10	1.859E-11	3.501E-10	1.859E-11
26.00 MHz	2.270E-10	1.205E-11	2.270E-10	1.859E-11	3.501E-10	1.859E-11

Simulation of the resonators in the previous bandpass diagram: - From the figure below, we observe that the resonant frequency is 2.45 GHz

1. <u>Parallel Resonator</u>

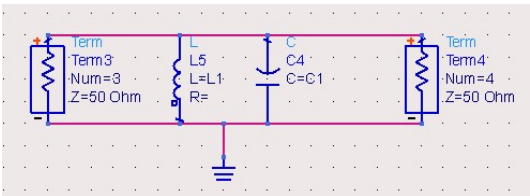

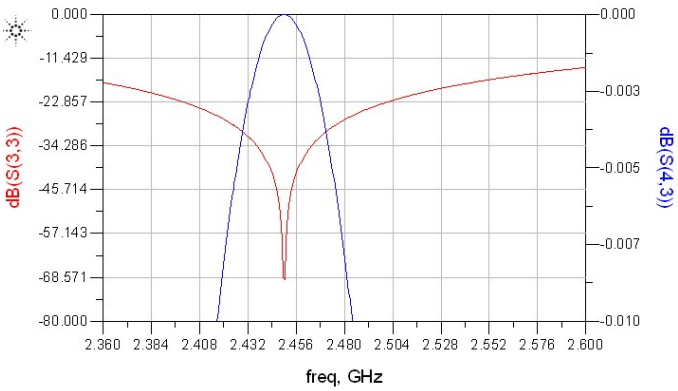

2. Series Resonator

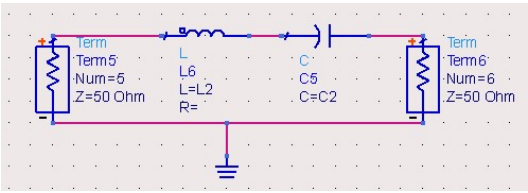

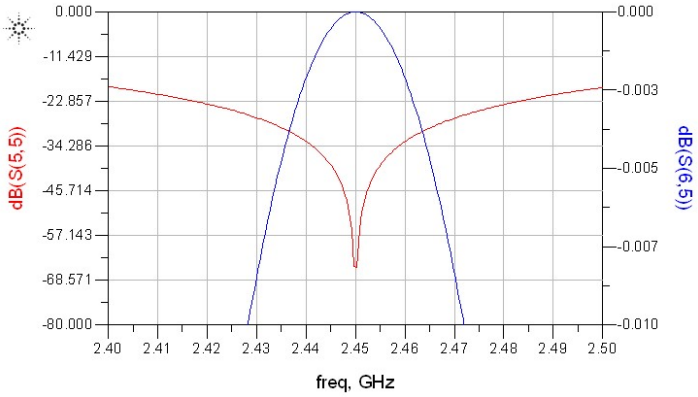

Resonator Simulation:

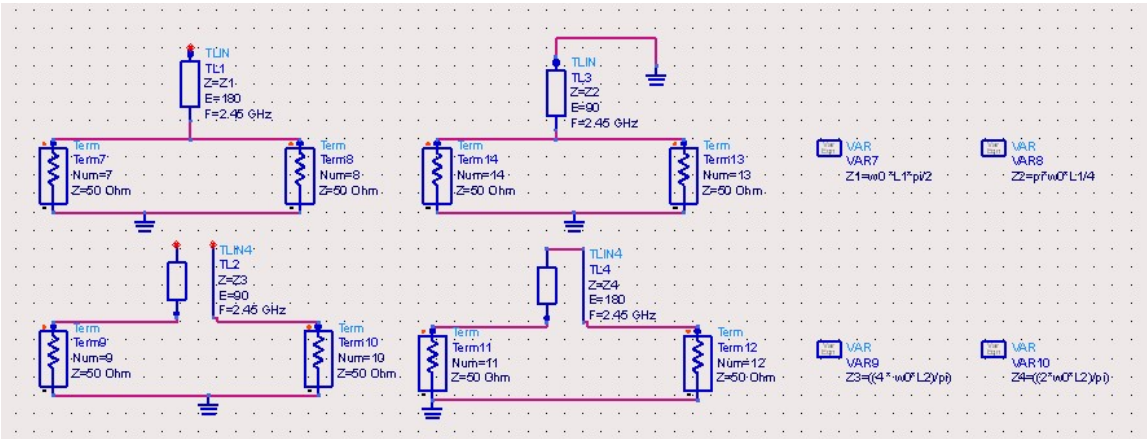

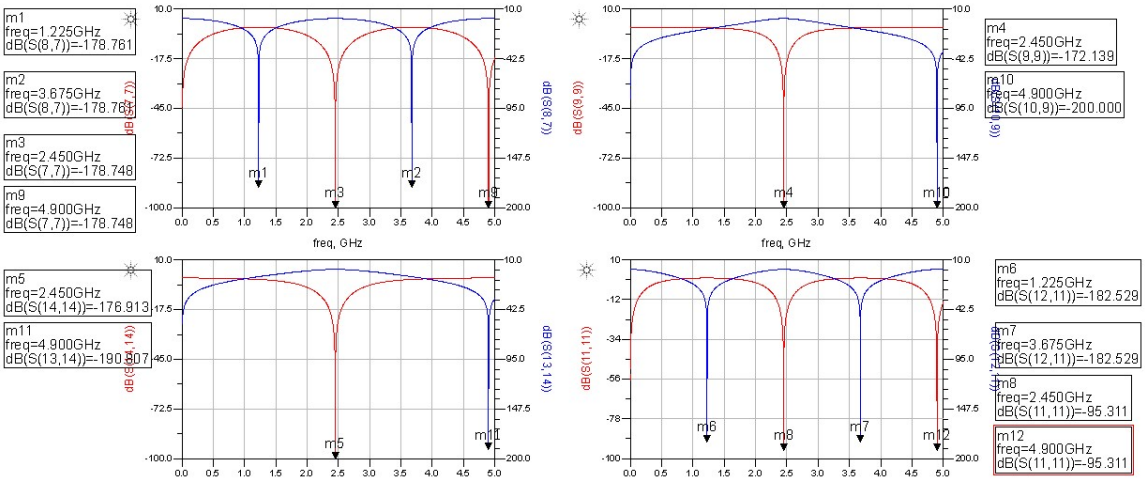

With the above configuration we can design 3 Filters, Their Response is as give below:

- 1 filter using only quarter wavelength stubs
- 1 filter using only half wavelength stubs
- 1 filter with short-ended stubs

Lamda/4 can be used to reduce the losses in the system i.e. can be added to compensate and remove the effects caused by the reflected signals.

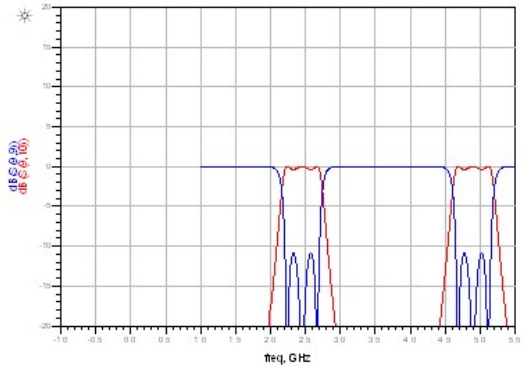

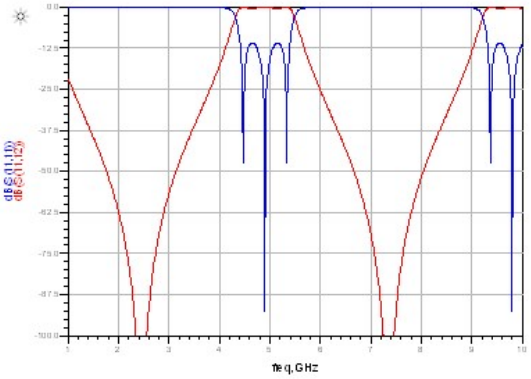

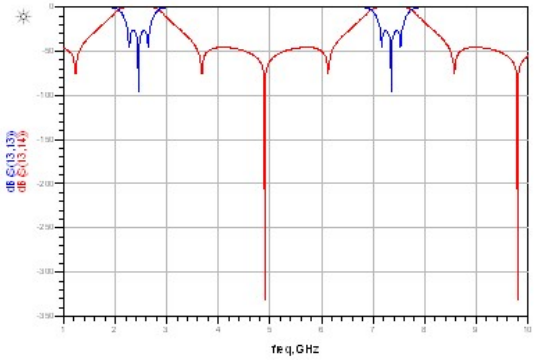

BandPass Filter with Stubs

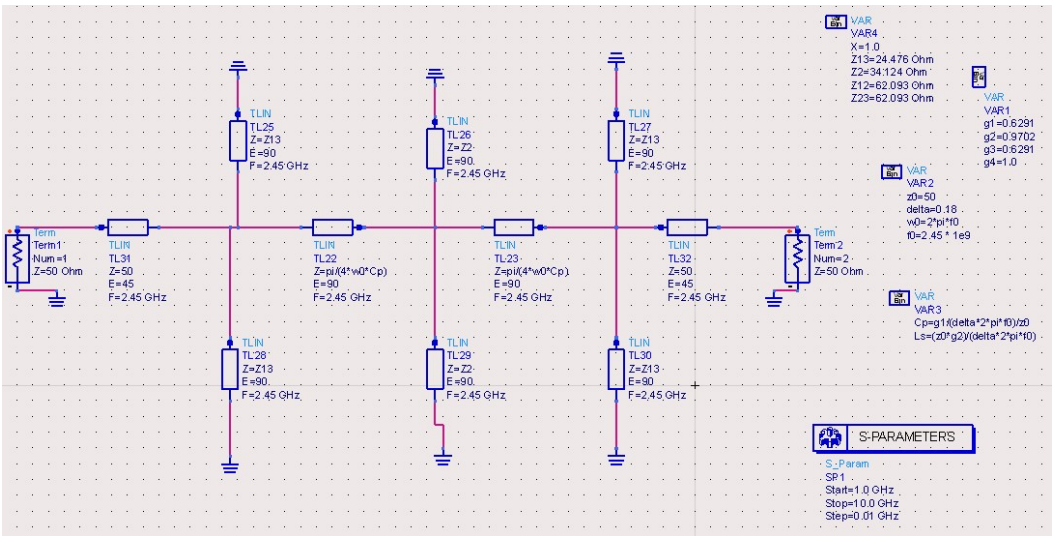

m5
freq=2.450GHz
dB(S(1,1))=-308.858

m7
freq=2.440GHz
dB(S(2,1))=-0.012

m9
freq=4.900GHz
dB(S(2,1))=-222.430

m10
freq=1.410GHz
dB(S(1,1))=-33.544

m11
freq=3.490GHz
dB(S(1,1))=-33.544

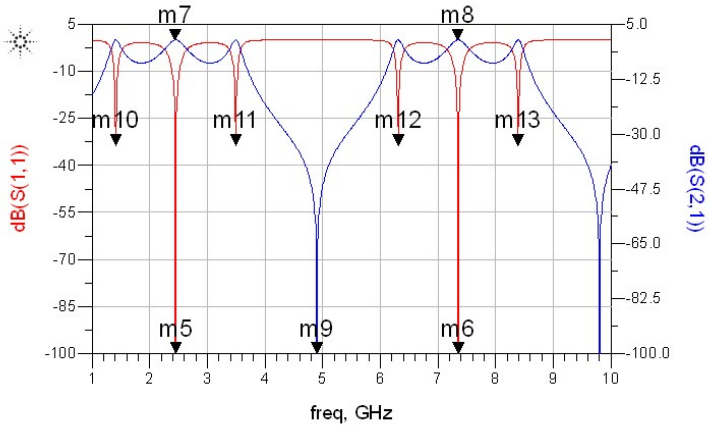

m6
freq=7.350GHz
dB(S(1,1))=-296.026

m8
freq=7.340GHz
dB(S(2,1))=-0.012

m12
freq=6.310GHz
dB(S(1,1))=-33.544

m13
freq=8.390GHz
dB(S(1,1))=-33.544

The central frequency is 2.45 GHz.

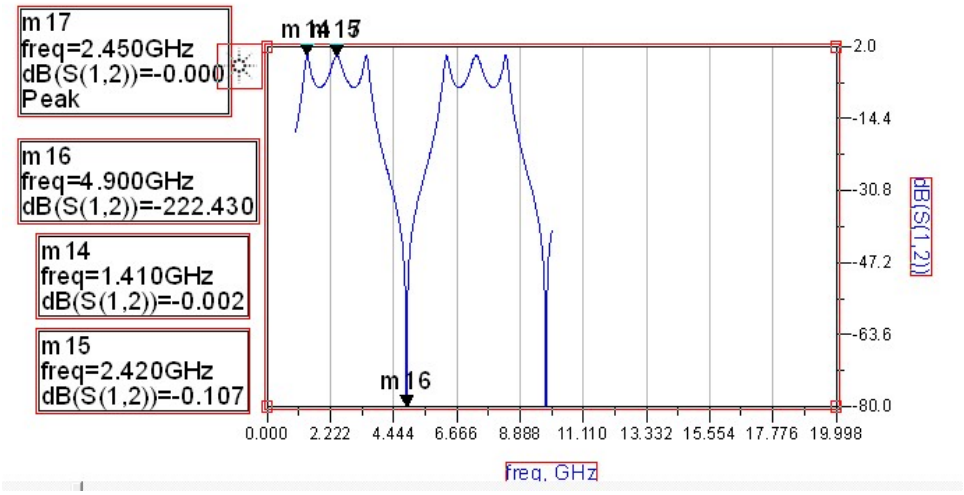

The ripple is approximately 7 db

<u>LineCalc to calculate the impedances realizable</u>

With Width 100um we get Z0 = 91 ohms.

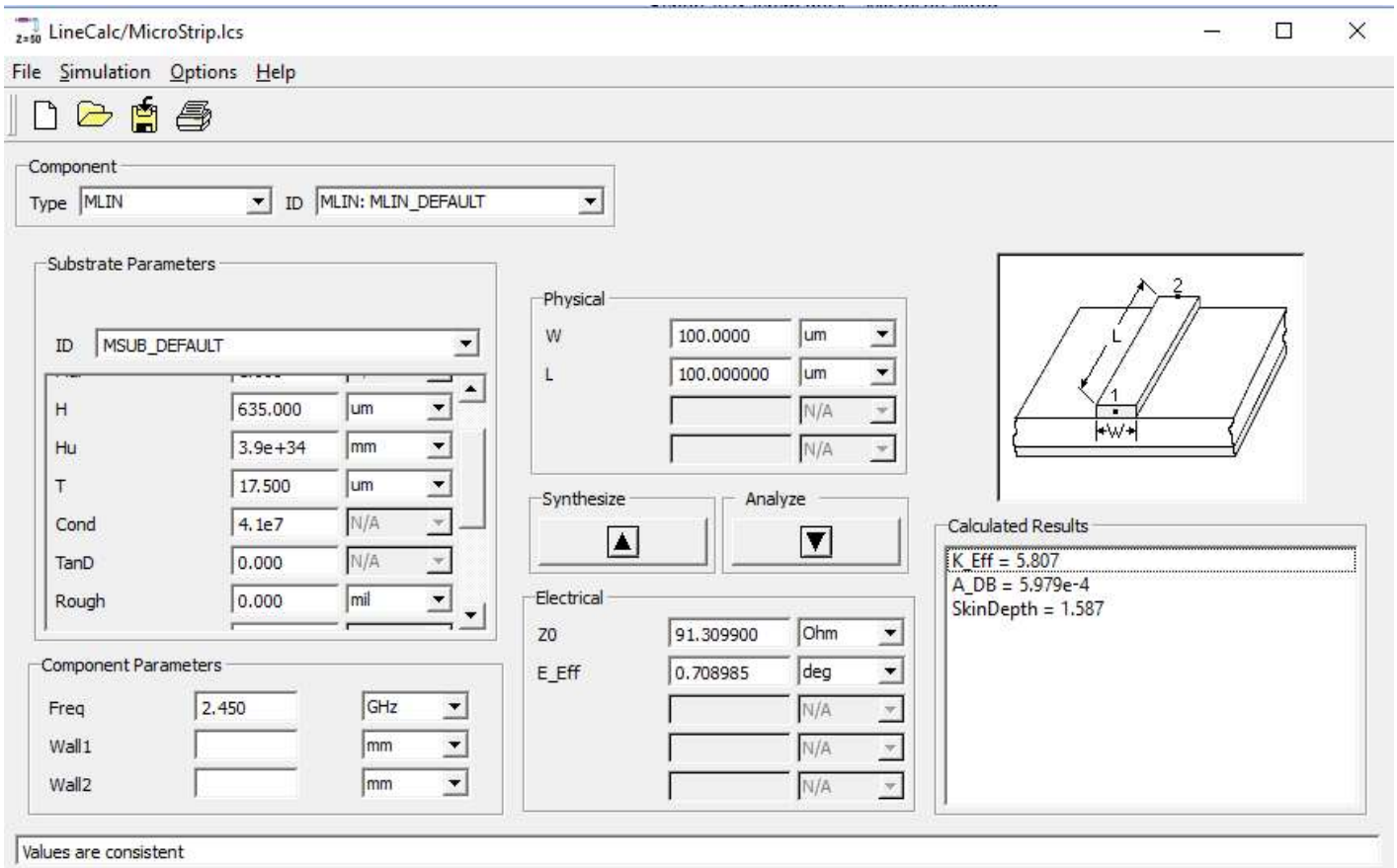

And with Width = 3mm the Zo is 18.2 Ohms

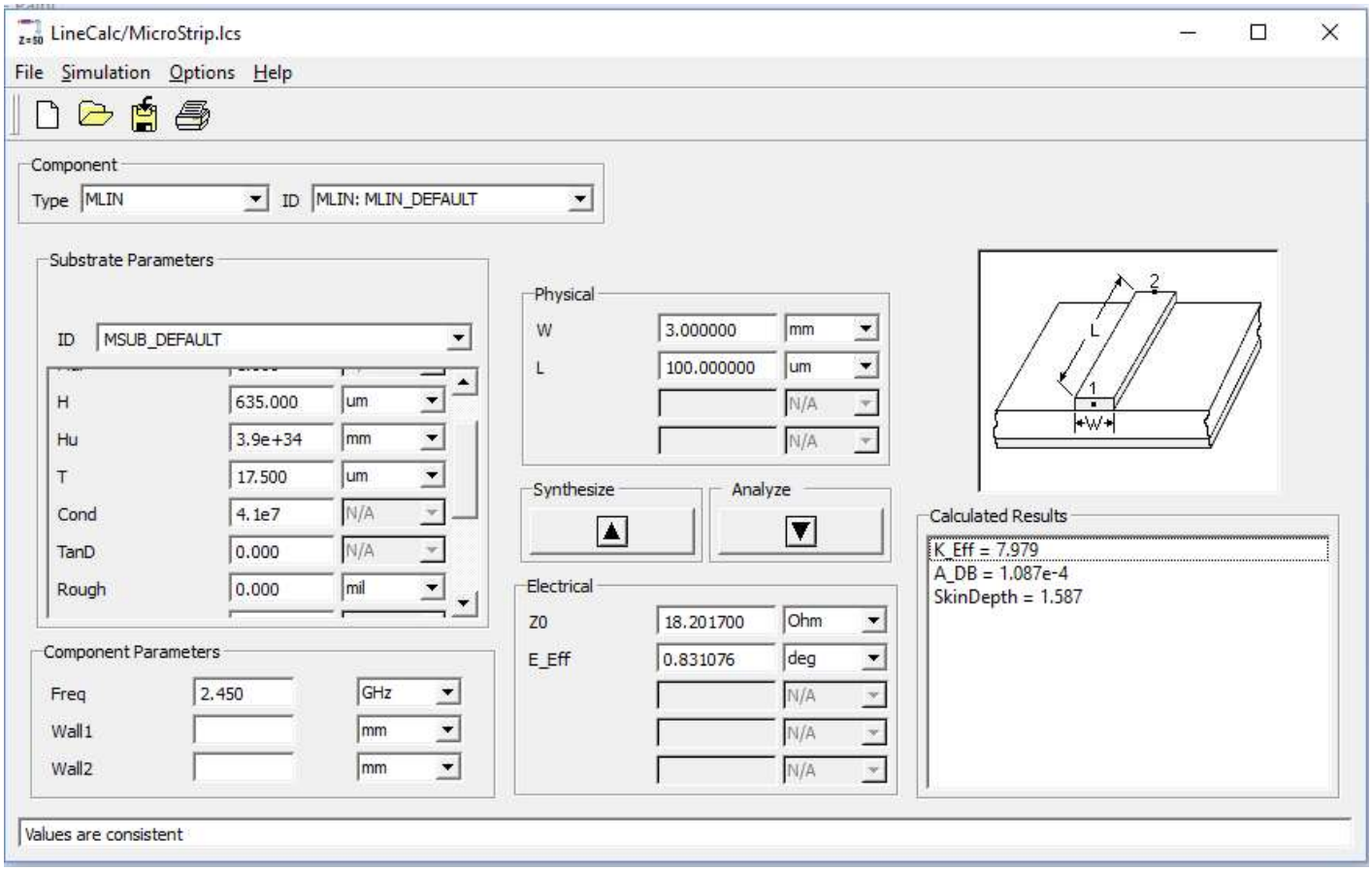

As both the values are within the range the filter can be designed.

Impedance	Width in mm	Length in mm
24.476	1.997740	11.300700
34.124	1.197340	11.661500
62.093	0.351185	12.394100

Transmission Lines without Losses: The filter is tuned to get the desired output. Using the tuning option available in the tool the impedance values can be varied to get the best response.

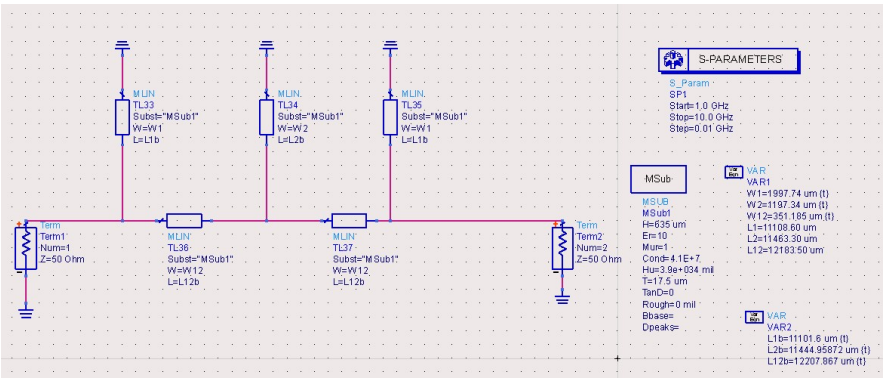

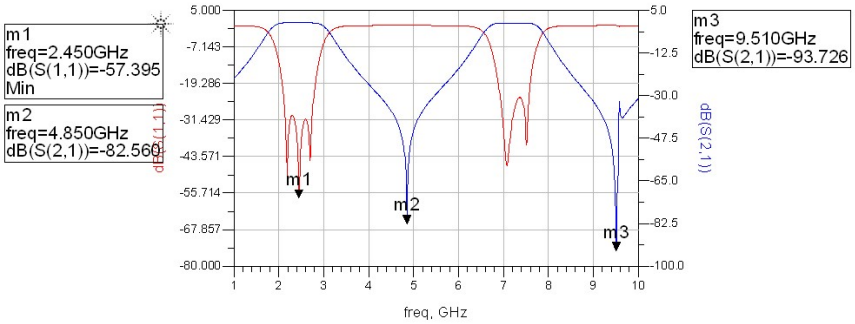

The filter design using MCROSO junction model is as per the snapshot below:

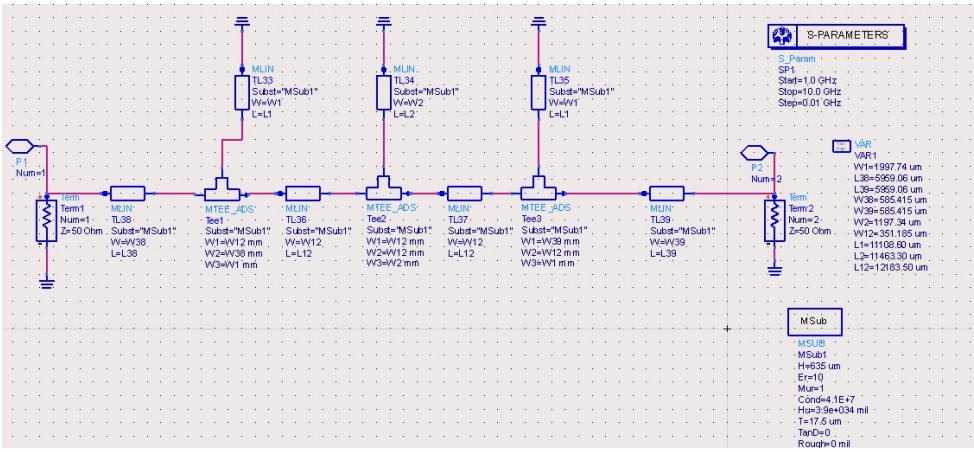

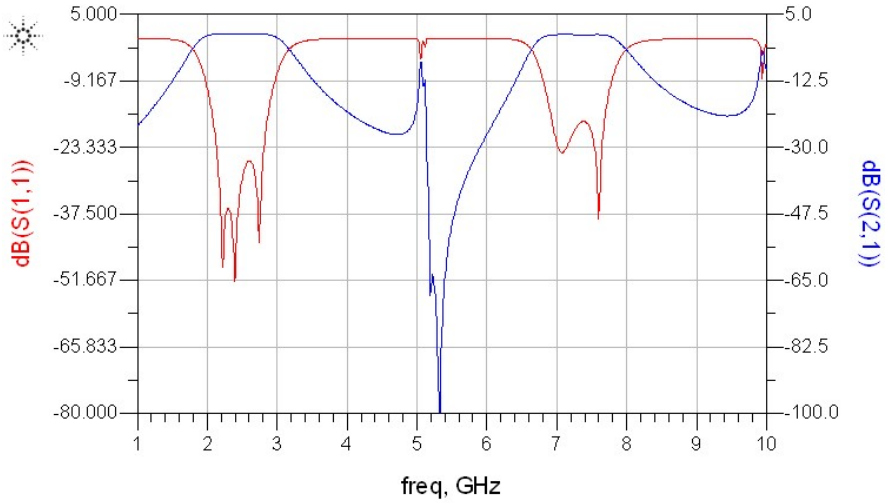

Generate the Substrate:

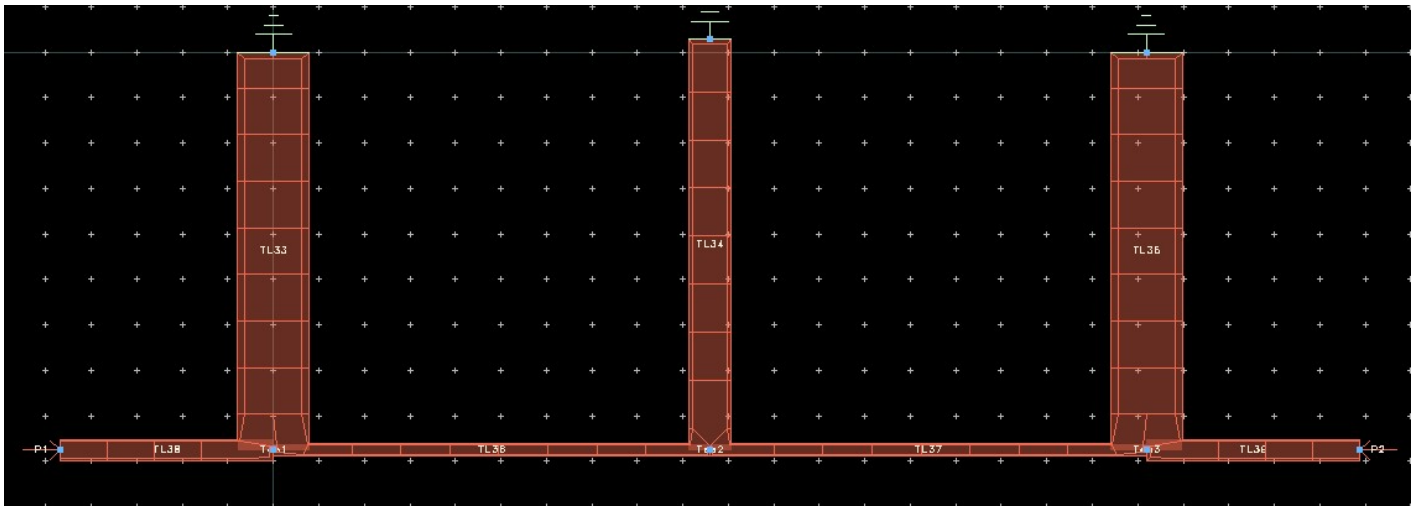

Electromagnetic Simulation for the same is as shown below:

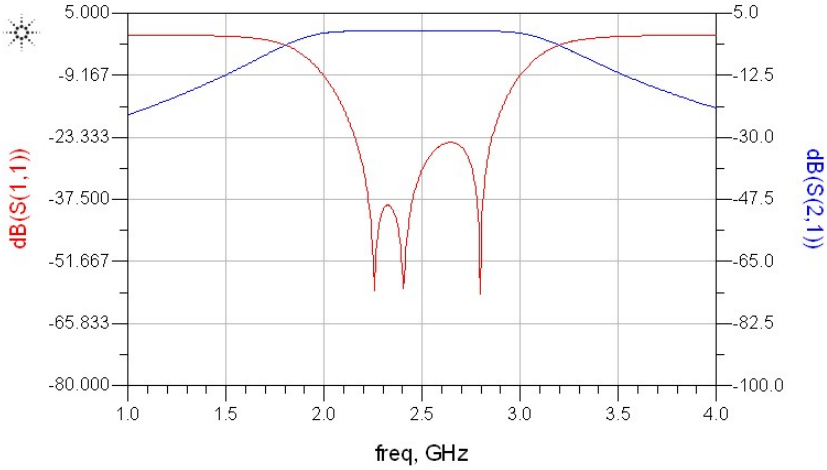

3 Antenna Simulation with Momentum

The Desired antenna is designed using the momentum tool of ads.

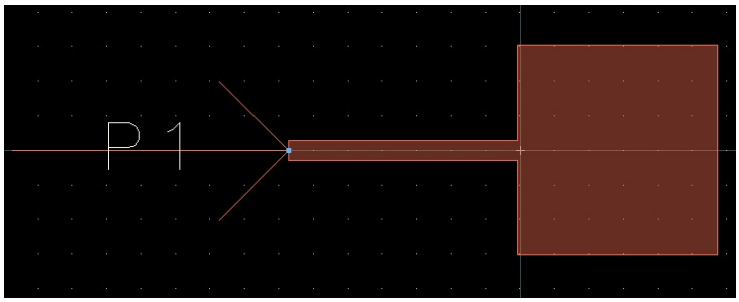

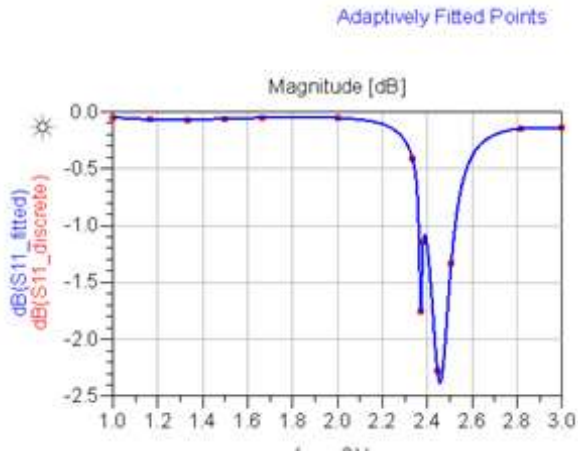

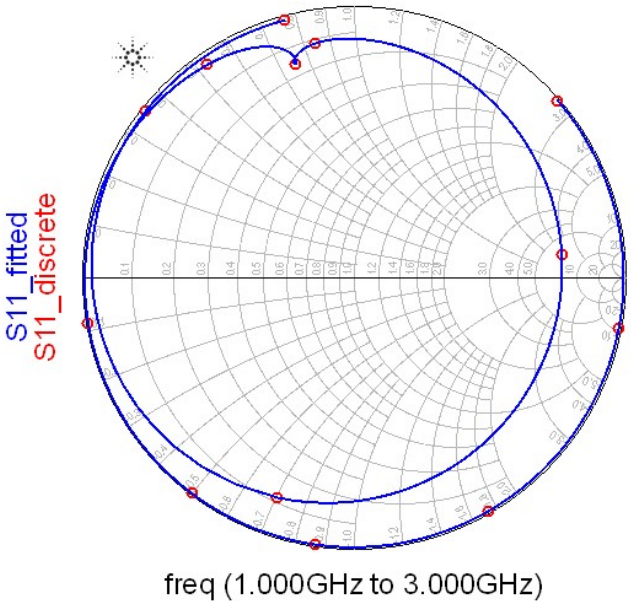

Good performance of a low pass filter.

The response can further be improved by adding slots mentioned in the exercise

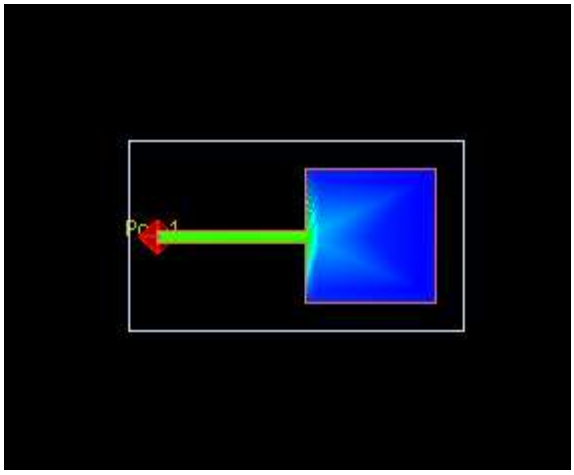
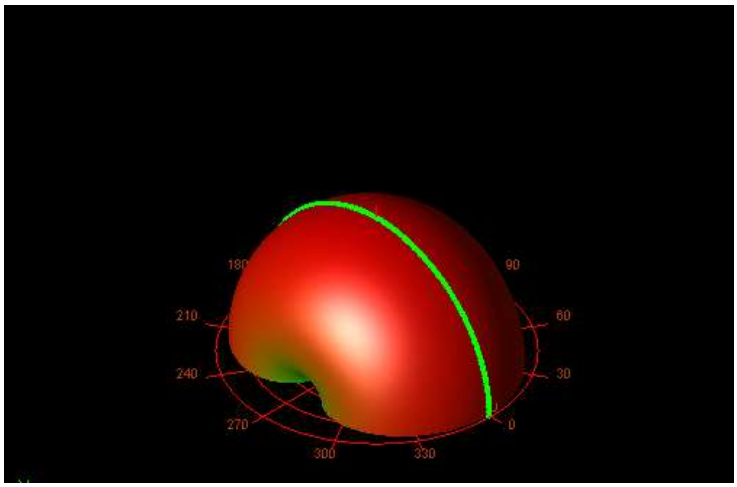
The Far field Computation for 2.45GHz frequency