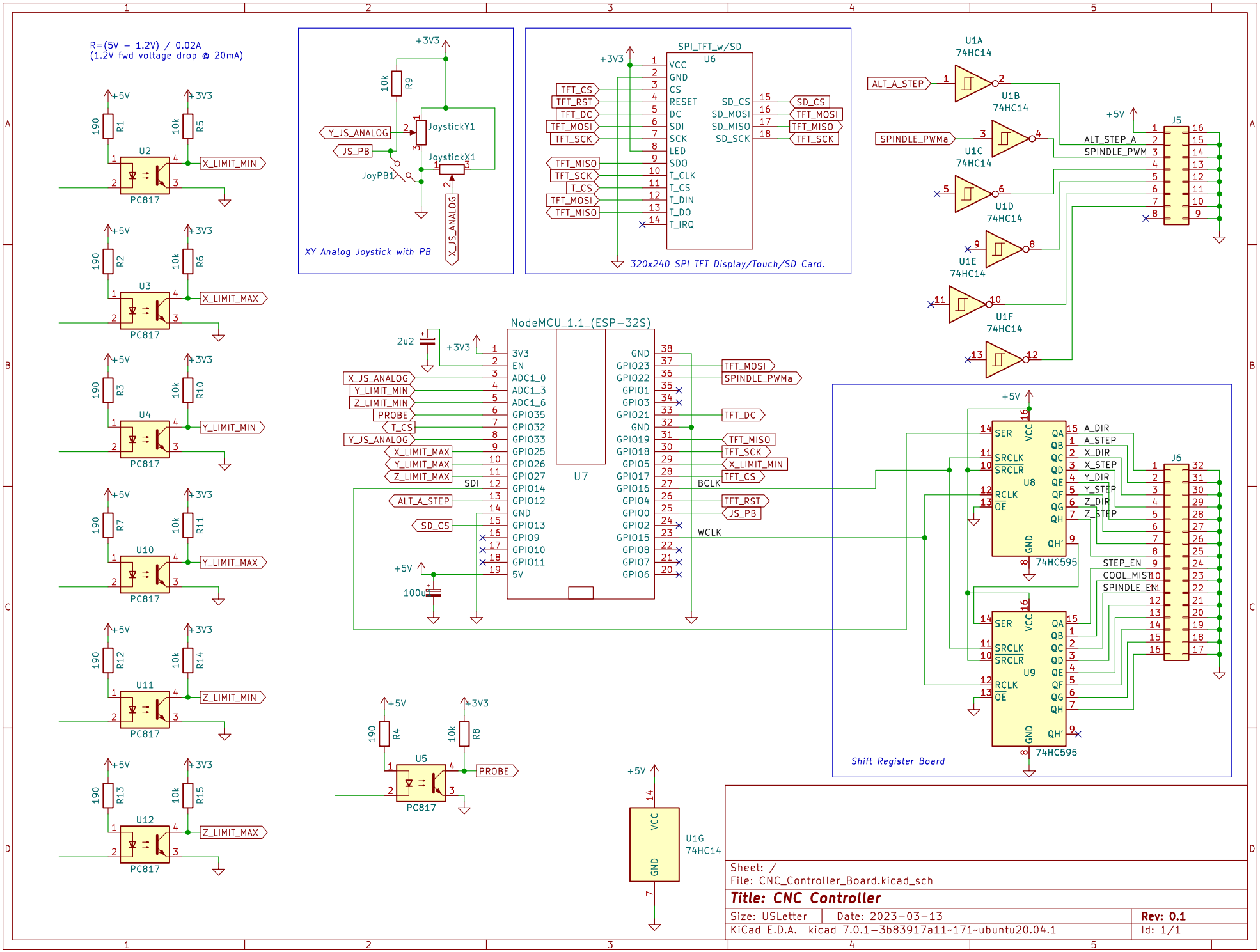
R=(5V - 1.2V) / 0.02A
(1.2V fwd voltage drop @ 20mA)
XY Analog Joystick with PB
320x240 SPI TFT Display/Touch/SD Card.
SPI_TFT_w/SD
U6
NodeMCU_1.1_(ESP-32S)
U7
Shift Register Board
74HC595
U8
U9
PC817
U2
U3
U4
U10
U11
U12
U5
U1A
U1B
U1C
U1D
U1E
U1F
U1G
74HC14
J5
J6
X_LIMIT_MIN
X_LIMIT_MAX
Y_LIMIT_MIN
Y_LIMIT_MAX
Z_LIMIT_MIN
Z_LIMIT_MAX
PROBE
JoystickY1
JoystickX1
JoyPB1
Y_JS_ANALOG
JS_PB
X_JS_ANALOG
ALT_A_STEP
SPINDLE_PWMa
ALT_STEP_A
SPINDLE_PWM
A_DIR
A_STEP
X_DIR
X_STEP
Y_DIR
Y_STEP
Z_DIR
Z_STEP
STEP_EN
COOL_MIST
SPINDLE_EN
BCLK
WCLK
SDI
Sheet: /
File: CNC_Controller_Board.kicad_sch
Title: CNC Controller
Size: USLetter
Date: 2023-03-13
Rev: 0.1
KiCad E.D.A. kicad 7.0.1-3b83917a11-171~ubuntu20.04.1
Id: 1/1