SPECTRUM DIGITAL INCORPORATED

TMS320C5535 eZdsp™

Technical Reference

2011 ***DSP Development Systems***

TMS320C5535 eZdsp™
Technical Reference

514585-0001 Rev. A
August 2011

SPECTRUM DIGITAL, INC.
12502 Exchange Drive, Suite 440 Stafford, TX. 77477
Tel: 281.494.4505 Fax: 281.494.5310
sales@spectrumdigital.com www.spectrumdigital.com

IMPORTANT NOTICE

Spectrum Digital, Inc. reserves the right to make changes to its products or to discontinue any product or service without notice. Customers are advised to obtain the latest version of relevant information to verify that the data being relied on is current before placing orders.

Spectrum Digital, Inc. warrants performance of its products and related software to current specifications in accordance with Spectrum Digital's standard warranty. Testing and other quality control techniques are utilized to the extent deemed necessary to support this warranty.

Please be aware that the products described herein are not intended for use in life-support appliances, devices, or systems. Spectrum Digital does not warrant nor is Spectrum Digital liable for the product described herein to be used in other than a development environment.

Spectrum Digital, Inc. assumes no liability for applications assistance, customer product design, software performance, or infringement of patents or services described herein. Nor does Spectrum Digital warrant or represent any license, either express or implied, is granted under any patent right, copyright, or other intellectual property right of Spectrum Digital, Inc. covering or relating to any combination, machine, or process in which such Digital Signal Processing development products or services might be or are used.

WARNING

This equipment is intended for use in a laboratory test environment only. It generates, uses, and can radiate radio frequency energy and has not been tested for compliance with the limits of computing devices pursuant to subpart J of part 15 of FCC rules, which are designed to provide reasonable protection against radio frequency interference. Operation of this equipment in other environments may cause interference with radio communications, in which case the user at his own expense will be required to take whatever measures necessary to correct this interference.

TRADEMARKS

Windows 2000, Windows XP, Windows Vista are registered trademarks of Microsoft Corp

Code Composer Studio IDE is a trademark of Texas Instruments

"eZdsp" is a trademark of Spectrum Digital, Inc.

Copyright © 2011 Spectrum Digital, Inc.

Contents

1 Introduction to the TMS320C5535 eZdsp 1-1
Provides a description of the TMS320C5535 eZdsp, and key features.
1.0 Overview of the TMS320C5535 eZdsp 1-2
1.2 Key Features of the TMS320C5535 eZdsp 1-3
1.3 C5535 eZdsp Block Diagram 1-4
1.4 C5535 eZdsp Memory Map 1-4
1.5 C5535 eZdsp I2C Addressing 1-5
2 Operation and Physical Specifications 2-1
Describes the operation and physical layout of the TMS320C5535 eZdsp and its connectors.
2.0 Board Layout 2-2
2.1 Connector Index 2-3
2.1.1 J1, C5535 USB Connector 2-4
2.1.2 J2, XDS100 USB Connector 2-4
2.1.3 J3, Audio In Connector 2-5
2.1.4 J4, Audio Out Connector 2-6
2.1.5 J5, LCD Interface 2-7
2.1.6 J6, Micro SD Card Connector 2-7
2.1.7 P1, P3, Wireless Interface 2-8
2.1.6 P2, Expansion Connector 2-9
2.2 System LEDs 2-11
2.3 Switches 2-11
2.3.1 SW1, SW2, Momentary Push Button Switches 2-11
2.3.2 SW3, 4 Position DIP Switch 2-12
2.4 Jumpers 2-13
2.5 Test Points 2-14
A Schematics A-1
Contains the schematics for the TMS320C5535 eZdsp
B Mechanical Information B-1
Contains the mechanical information about the TMS320C5535 eZdsp

About This Manual

This document describes the board level operations of the TMS320C5535 eZdsp. The eZdsp is based on the Texas Instruments TMS320C5535 Digital Signal Processor.

The TMS320C5535 eZdsp is a USB based printed circuit board (PCB) that allows engineers and software developers to evaluate certain characteristics of the TMS320C5535 DSP.

Notational Conventions

This document uses the following conventions.

The TMS320C5535 eZdsp will sometimes be referred to as the C5535 eZdsp, or eZdsp.

Program listings, program examples, and interactive displays are shown is a special italic typeface. Here is a sample program listing.

equations
!rd = !strobe&rw;

Information About Cautions

This book may contain cautions.
This is an example of a caution statement.
A caution statement describes a situation that could potentially damage your software, or hardware, or other equipment. The information in a caution is provided for your protection. Please read each caution carefully.

Related Documents

Texas Instruments Code Composer Studio IDE Users Guide
Data sheet for the TMS320C5535

Chapter 1

Introduction to the TMS320C5535 eZdsp

This chapter provides you with a description of the C5535 eZdsp along with the key features.

Topic **Page**

1.0	Overview of the TMS320C5535 eZdsp	1-2
1.1	Key Features of the TMS320C5535 eZdsp	1-3
1.2	C5535 eZdsp Block Diagram	1-4
1.3	C5535 eZdsp Memory Map	1-4
1.4	C5535 eZdsp I^2C Addressing	1-5

1.0 Overview of the C5535 eZdsp

The C5535 eZdsp is an evaluation tool for the Texas Instruments TMS320C5535 Digital Signal Processor (DSP). This USB bus powered tool allows the user to evaluate the following items:

- The TMS320C5535 processor along with its peripherals
- The TLV320AIC3204 codec
- The Code Composer Studio IDE™ software development tools

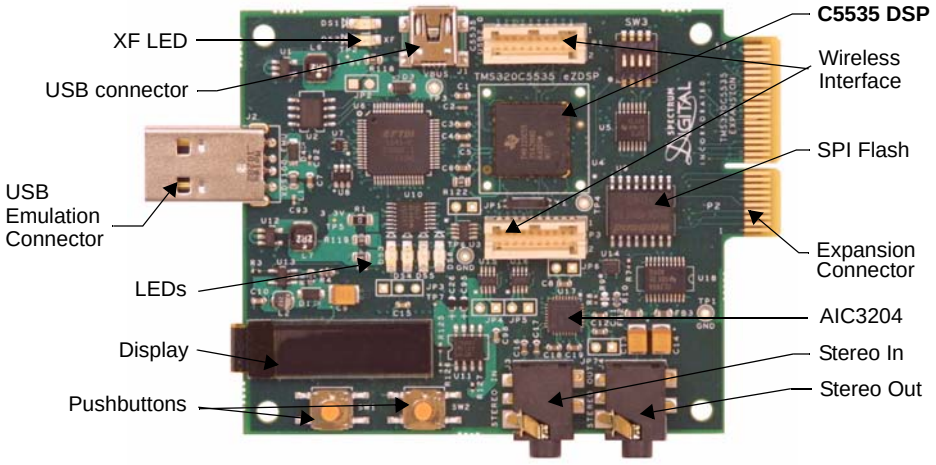

Figure 1-1, Key Features of the C5535 eZdsp (top)

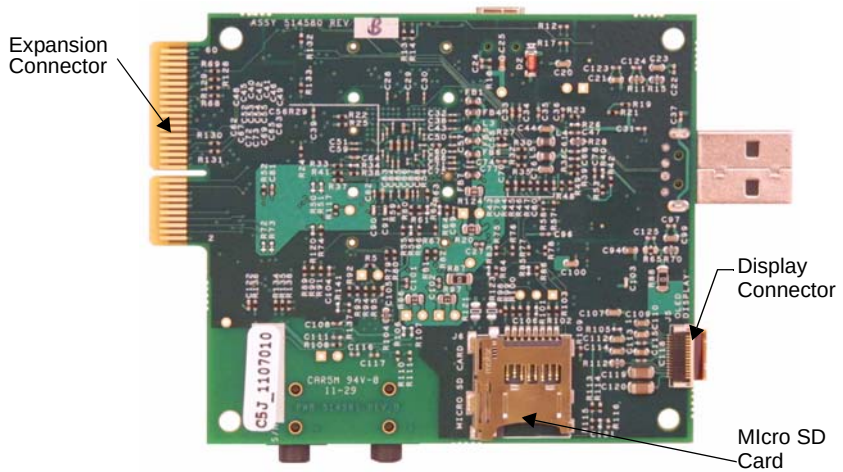

Figure 1-2, Key Features of the C5535 eZdsp (bottom)

1.1 Key Features of the C5535 eZdsp

The C5535 eZdsp has the following features:

- Texas Instrument's TMS320C5535 Digital Signal Processor
- Texas Instruments TLV320AIC3204 Stereo Codec (stereo in, stereo out)
- Micro SD card connector
- USB 2.0 interface to C5535 processor
- 8 Mbytes SPI flash
- I^2C OLED display
- 5 user controlled LEDs
- 2 user readable push button switches
- 3 INA219 I^2C Current/Power Monitors
- Embedded USB XDS100 JTAG emulator
- Wireless interface
- Expansion edge connector
- Power measurement test points
- Power provided by USB interface
- Compatible with Texas Instruments Code Composer Studio v4
- USB cable

1.2 C5535 eZdsp Block Diagram

The block diagram of the C5535 eZdsp is shown below.

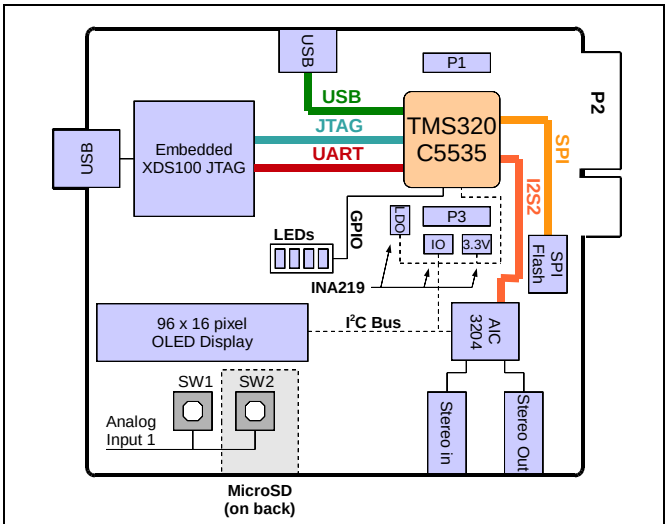

Figure 1-3, C5535 eZdsp Block Diagram

1.3 C5535 eZdsp Memory Map

The C5535 eZdsp supports on chip DARAM, SARAM, and off chip SPI Flash. The addressing for each of these memory blocks is shown in the figure below.

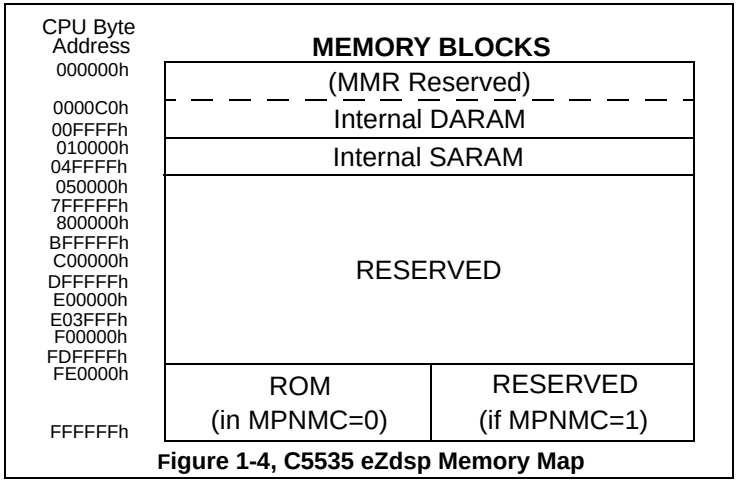

Figure 1-4, C5535 eZdsp Memory Map

Note: MPNMC bit in ST3 Status Register is cleared(0) at RESET so the C5535 will attempt to execute its boot load sequence.

1.4 C5535 eZdsp I2C Addressing

The C5535 eZdsp has multiple I2C devices for different purposes. The table below shows the addresses of these devices on the I2C bus.

Table 1: C5535 eZdsp I2C Addresses

eZdsp I2C Device	I2C Address	Function
TLV320AIC3204	0x18	Audio CODEC
OSD9616GLBBG01	0x3C	OLED Display
U16, INA219IDCN	0x40	USB 3.3V Power Monitor
U15, INA219IDCN	0x44	VDD_IO 3.3V Power Monitor
U3, INA219IDCN	0x48	VDD Core Power Monitor

Chapter 2

Physical Description

This chapter describes the physical layout of the TMS320C5535 eZdsp.

Topic **Page**

2.0	Board Layout	2-2
2.1	Connector Index	2-3
2.1.1	J1, C5535 USB Connector	2-4
2.1.2	J2, XDS100 USB Connector	2-4
2.1.3	J3, Audio In Connector	2-5
2.1.4	J4, Audio Out Connector	2-6
2.1.5	J5, LCD Interface	2-7
2.1.6	J6, Micro SD Card Connector	2-7
2.1.7	P1, P3, Wireless Interface	2-8
2.1.8	P2, Expansion Connector	2-9
2.2	System LEDs	2-11
2.3	Switches	2-11
2.3.1	SW1, SW2, Momentary Push Button Switches	2-11
2.3.2	SW3, 4 Position DIP Switch	2-12
2.4	Jumpers	2-13
2.5	Test Points	2-14

2.0 Board Layout

The C5535 eZdsp is a 3.35 x 2.65 inch six (6) layer printed circuit board which is powered off the USB bus of personal computer or laptop computer. This means this board does not require an external power supply.

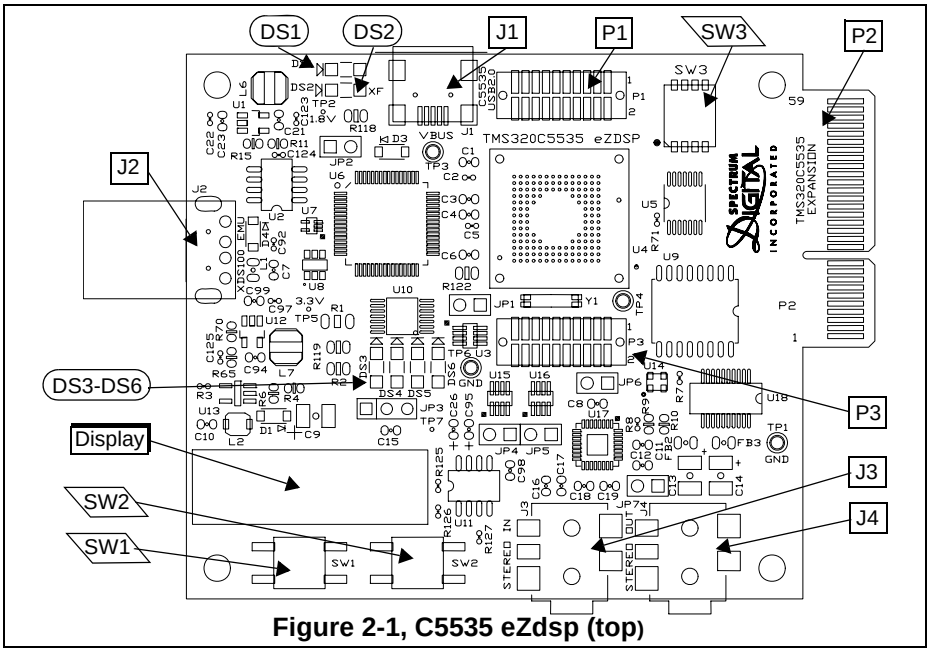

Figure 2-1, C5535 eZdsp (top)

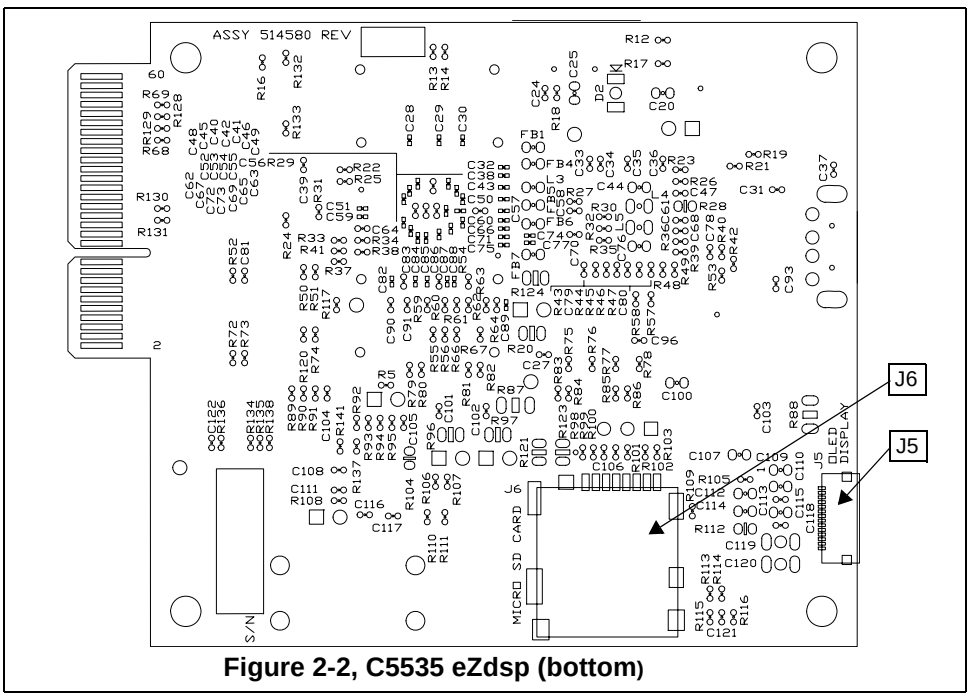

Figure 2-2, C5535 eZdsp (bottom)

2.1 Connector Index

The C5535 eZdsp has nine (9) connectors which provide the user access to various signals on the eZdsp. These connectors are shown in the table below.

Table 1: C5535 eZdsp Connectors

Connector	# Pins	Function	Schematic Page	Board Side
J1	25	C5535 USB	2	Top
J2	6	Emulation USB	13	Top
J3	2	Audio In	10	Top
J4	2	Audio Out	10	Top
J5	14	LCD Interface	11	Bottom
J6	8	Micro SD Card Interface	7	Bottom
P1	20	Wireless Interface	6	Top
P2	30 x 2	Expansion Connector	12	Top/Bottom
P3	20	Wireless Interface	6	Top

The following manufacturer and parts numbers can be used to interface to the connectors on the C5535 eZdsp:

Table 2: C5535 eZdsp Mating Connectors

Connector	Manufacturer	Part #
J1	PC or laptop	
J2	PC or laptop	
P1	CUI Inc	CUI SP-3501, Digi-Key CP-3502-ND
P2	Samtec	Samtec MEC1-120-02-S-D-A, Digi-Key SAM8117-ND
P3	CUI Inc	CUI SP-3501, Digi-Key CP-3502-ND

2.1.1 J1, C5535 USB Connector

The USB connector, J1, is attached the C5535 processor for use by C5535 software applications. The signals on the pins of this connector are shown below.

Table 3: J1, USB Connector

Pin #	Signal Name
1	USBVDD
2	D-
3	D+
4	ID / NC
5	USBVSS/GND
6,7,8,9	GND (shield)

2.1.2 J2, XDS100 USB Connector

The USB connector, J2, is used to attach the C5535 eZdsp to a personal computer or laptop. This allows the user to develop and debug software on the C5535 eZdsp. The signals on the pins of this connector are shown below.

Table 4: J2, XDS100 USB Connector

Pin #	Signal Name
1	U7, Pin 1 (VCC), VCCUSB, 5V_USB
2	U7, Pin 5 (IO4), U6, Pin 7(DM), D-
3	U7, Pin 3(IO1), U6, Pin 8(DP), D+
4	GND
5	GND, shield
6	GND, shield

2.1.3 J3, Audio In Connector

The Stereo In connector, J3, is used to bring signals into the TLV320AIC3204 codec, U17. The signals on the pins of this connector are shown below.

Table 5: J3, Audio In Connector

Pin #	Signal Name	AIC3204 Pin #
1	GND-AIC	
2	AIC_LINE2L	U17, Pin 15
3	AIC_LINE2R	U17, Pin 16
4	No connect	
5	No connect	

The figure below shows a typical stereo jack.

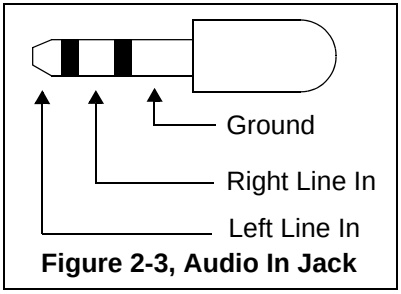

Figure 2-3, Audio In Jack

2.1.4 J4, Audio Out Connector

The Audio Out connector, J4, is used to bring signals from the TLV320AIC3204 codec, U17. The signals on the pins of this connector are shown below.

Table 6: J4, Audio Out Connector

Pin #	Signal Name	AIC3204 Pin #
1	GND-AIC	
2	HEADPHONE_LOUT	U17, Pin 25
3	HEADPHONE_ROUT	U17, Pin 27
4	No connect	
5	No connect	

The figure below shows a typical headphone jack.

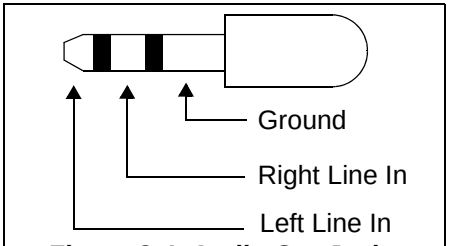

Figure 2-4, Audio Out Jack

2.1.5 J5, LCD Interface

Connector, J5, is used to interface to an LCD character display. The signals on the pins of this connector are shown below.

Table 7: J5, LCD Interface

Pin #	Signal Name
1	C2P
2	C2N
3	C1P
4	C1N
5	VBAT
6	VBREF
7	VSS, GND
8	VDD, VCC_3V3
9	RESn, TARGET_PWR_GOOD
10	SCL, I2C_SCL
11	SDA, I2C_SDA
12	IREF
13	VCOMH
14	VCC, V13

2.1.6 J6, Micro SD Card Connector

The Micro SD connector, J6, is used to interface the C5535 processor to a micro SD card. The signals on the pins of this connector are shown below.

Table 8: J6, Micro SD Card Connector

Pin #	Signal Name
1	DAT2, SD_DATA2
2	DAT3, SD_DATA3
3	CMD, SD_CMD
4	VDD, VCC_3V3
5	CLK, SD_CLK
6	GND
7	DAT0, SD_DATA0
8	DAT1, SD_DATA1
9	INSERT, VCC_3V3
10	INSERT_COM, GND
11,12,13,14	NC

2.1.7 P1, P3, Wireless Interface

Connectors P1 and P3 are used to provide an interface to Texas Instruments Wireless Interface modules. The signals on the pins of these connectors are shown in the tables below.

Table 9: P1, Wireless Interface Connector

Pin #	Signal Name	Pin #	Signal Name
1	GND	2	SD_DATA0
3	UART_RTS	4	SD_DATA1
5	RTC_CLKOUT	6	SD_DATA2
7	UART_TX	8	SD_DATA3
9	UART_RX	10	GPIO10
11	I2C_SDA	12	GPIO11
13	I2C_SCL	14	SPI_CS2
15	SD_CLK	16	SPI_CLK
17	SD_CMD	18	SPI_TX
19	GND	20	SPI_RX

Table 10: P3, Wireless Interface Connector

Pin #	Signal Name	Pin #	Signal Name
1	NC	2	GND
3	NC	4	NC
5	NC	6	NC
7	VCC_3V3	8	I2S1_RX
9	VCC_3V3	10	I2S1_DX
11	I2S1_FS	12	NC
13	GPIO12	14	NC
15	GPIO14	16	NC
17	I2S1_CLK	18	UART_CTS
19	GPIO14	20	GPIO13

2.1.8 P2, Expansion Connector

The expansion edge connector, P2, provides the C5535 serial interface signals to limitless user expansion boards. This edge connector has all of the odd number (1,3,...,59) tabs on the top side of the board and all of the even number tabs (2,4,...,46) on the bottom side of the board. The diagram below shows the position of these tabs.

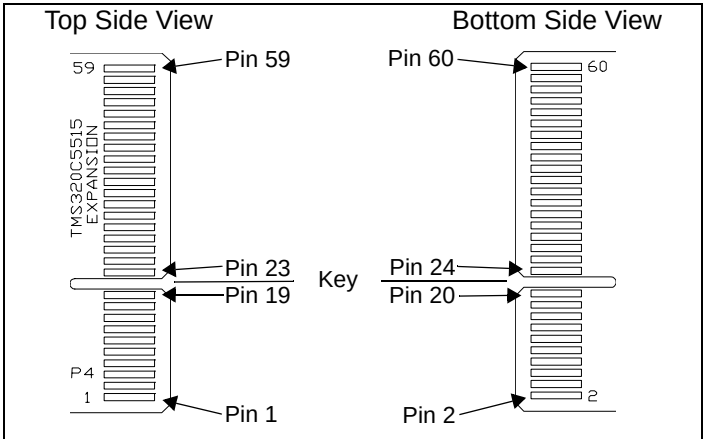

Figure 2-5, P2 Connector Tab Positions

The table below lists the signals that appear on each of the tabs of connector P2. The signals on the pins of this connector are shown below.

Table 11: P2, Expansion Connector

Pin # Top	Signal Name	Pin # Bottom	Signal Name
1	GND	2	GND
3	SPI_CS1	4	GPIO13
5	SPI_CLK	6	GPIO12
7	SPI_TX	8	GPIO14
9	SPI_RX	10	GPIO15
11	GND	12	GND
13	GND	14	GND
15	GND	16	GND
17	I2C_SDA	18	GPIO16
19	I2C_SCL	20	GPIO17
	Key		Key
23	I2S2_CLK	24	GPIO11
25	I2S2_RX	26	GPIO10
27	I2S2_DX	28	GPIO5
29	I2S2_FS	30	GPIO4
31	GND	32	GND
33	I2S1_CLK	34	UART_RTS
35	I2S1_RX	36	UART_CTS
37	I2S1_DX	38	UART_RX
39	I2S1_FS	40	UART_TX
41	VCC_3V3	42	VCC_USB_DUAL
43	VCC_3V3	44	VCC_USB_DUAL
45	I2S0_CLK	46	SPI_CS3
47	I2S0_RX	48	VCC_USB_DUAL
49	I2S0_DX	50	GPAIN3
51	I2S0_FS	52	GPAIN2
53	SPI_CS2	54	GPAIN1
55	SPI_CS0	56	GPAIN0
57	VCC_3V3	58	VCC_USB_DUAL
59	VCC_3V3	60	VCC_USB_DUAL

2.2 System LEDs

The C5535 eZdsp has 6 Light Emitting Diodes (LED). LEDs DS2- DS6 are under the application software control running on the C5535 processor. The C5535 eZdsp LEDs are shown in the table below.

Table 12: System LEDs

LED #	Color	Schematic Page	Signal Name
DS1	Green	13	U6, Pin 60, PWREN#
DS2	Green	2	U4, Pin J3, XF
DS3	Green	11	U4, Pin P8, GPIO17
DS4	Red	11	U4, Pin P3, GPIO16
DS5	Yellow	11	U4, Pin N7, GPIO15
DS6	Blue	11	U4, Pin P2, GPIO14

2.3 Switches

The C5535 eZdsp has three switches, two push button switches, and one DIP switch. These switches are shown in the table below.

Table 13: Switches

Switch #	Schematic Page	Signal Name/Reading
SW1 only closed	11	GPAIN1, approximately 1.2 volts
SW2 only closed	11	GPAIN1, approximately 0.9 volts
SW3	5	4 position DIP switch

2.3.1 SW1, SW2, Momentary Push Button Switches

Switches SW1, and SW2 are momentary push button switches read by the application software running on the C5535 processor using the GPAIN1 port.

2.3.2 SW3, 4 Position DIP Switch

Switch SW3 is a 4 position DIP switch. The signals attached to each position are shown in the table below.

Table 14: Switch SW3

Position	Signal Name	Default Setting
1	CLK_SEL	OFF
2	UART_BUFF_EN	ON
3	AIC3204I2C_ENn	OFF
4	SPI_CS0	ON

The figure below shows switch SW3 default settings.

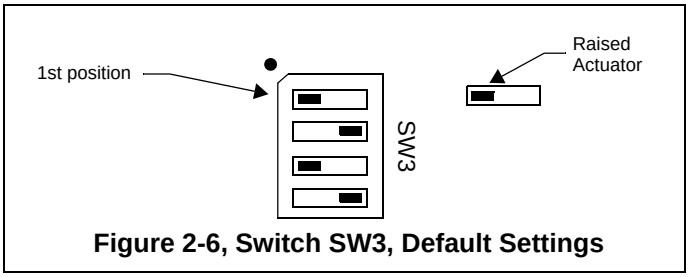

Figure 2-6, Switch SW3, Default Settings

The table below shows the functions of the setting in each position of SW3.

Table 15: Switch SW3 Functions

Position	Setting	Function
1	ON	Select external 12 MHz. clock
	OFF	Select internal 32 MHz. RTC clock
2	ON	* Enable UART via J2 for VCP
	OFF	* Disable UART via J2
3	ON	Disable AIC3204 interface
	OFF	Enable AIC3204 interface
4	ON	Enable SPI Flash CS
	OFF	Disable SPI Flash CS

* **Note:** GPIO15 can overwrite

2.4 Jumpers

The C5535 eZdsp has 7 jumpers. The location of the jumpers are shown in the figure below.

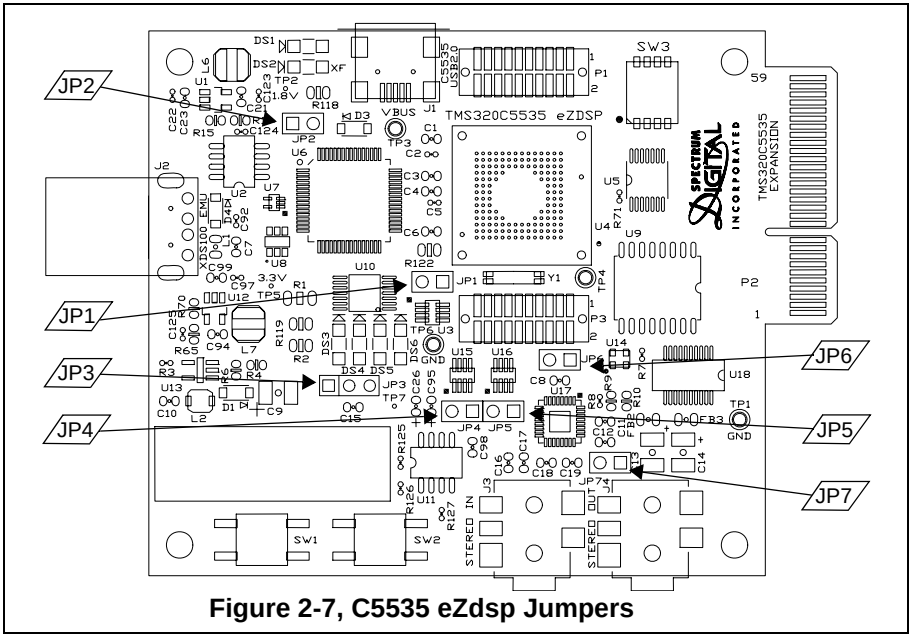

Figure 2-7, C5535 eZdsp Jumpers

The function of these jumpers is shown in the table below.

Table 16: Jumpers

Jumper	# of positions	Schematic Page	Jumper Function
JP1	2	4	Allows measurement of VCore
JP2	2	13	Power source select. Allows connection of VCCUSB to VBUS_C5515
JP3	3	9	I2C Headers
JP4	2	4	Allows measurement of VDD_IO1 voltage
JP5	2	8	Allows measurement of USB 3.3V
JP6	2	10	Allows measurement of VCC_3V3 for AIC3204
JP7	2	10	Allows measurement of V3.3A for AIC3204

Jumper JP2 is the power source select jumper. When this jumper is shorted the C5535 eZdsp can be powered from the C5535 USB interface (J1). This jumper is shipped in the "**shorted**" state from the factory.

2.5 Test Points

The C5535 eZdsp has seven (7) test points for the monitoring of signals. The location of the test points are shown in the figure below.

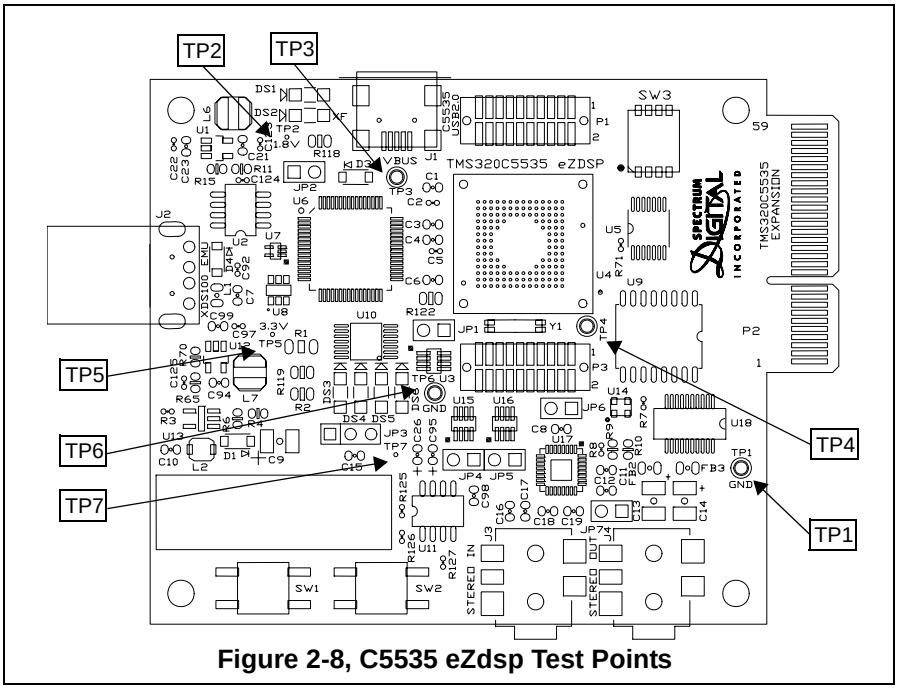

Figure 2-8, C5535 eZdsp Test Points

The signals on the test points are shown in the table below.

Table 17: Test Points

TP #	Schematic Page	Signal Name
TP1	4	GND
TP2	8	VCC_1V8_TP
TP3	2	U4, Pin I14, VBUS/VBUS_C5535
TP4	2	U4, Pin A2, CLKOUT
TP5	8	VCC_3V3_TP
TP6	10	GND
TP7	9	U11, Pin 7,8, VCC_1V3, VCC_1V3_TP

Appendix A

Schematics

This appendix contains the schematics for the TMS320C5535 eZdsp.

NOTES, UNLESS OTHERWISE SPECIFIED:

1. RESISTANCE VALUES IN OHMS.
2. CAPACTITANCE VALUES IN MICROFARADS.
3. REFERENCE DESIGNATORS USED:
4. ALL 0.1 uF AND 0.01uF CAPACITORS ARE DECOUPLING CAPS UNLESS OTHERWISE NOTED. THEY ARE SHOWN ON THE PAGE WITH THE INTEGRATED CIRCUITS THEY SHOULD BE PLACED NEAR.

REV	DESCRIPTION	DATE	APPROVED
A	Initial schematic for layout	1/10/2011	RRP
B	BETA UPDATES	6/19/2011	RRP
C	PRODUCTION UNITS	7/19/2011	RRP

SCHEMATIC CONTENTS

01 - TITLE PAGE
02 - TMS320C5535 IO
03 - UART BUFFER
04 - TMS320C5535 POWER
05 - SPI FLASH
06 - CC BOARD INTERFACE
07 - MICRO SD INTERFACE
08 - POWER SUPPLIES
09 - AUDIO CODEC
10 - LCD/USER LEDS/SWITCHES
11 - EXPANSION CONNECTOR
12 - XDS100-v2 INTERFACE

REVISION STATUS OF SHEETS

REV												
SHEET												
REV												
SHEET												
REV	A	A										
SHEET	11	12										
REV	C	B	A	A	A	A	A	A	A	A	NEXT ASSY	USED ON
SHEET	1	2	3	4	5	6	7	8	9	10	APPLICATION	

DWN	R.R.P.	10/15/2009
CHK	T.W.K.	10/15/2009
ENGR	R.R.P.	10/15/2009
ENGR-MGR	R.R.P.	10/15/2009
QA	C.M.D.	10/15/2009
MFG	R.R.P.	10/15/2009
RLSE	R.R.P.	10/15/2009

SPECTRUM DIGITAL INCORPORATED

Title:	TMS320C5535EZDSP MODULE	
Page Contents:	TITLE SHEET	
Size:B	DWG NO 514582-0001	Revision: C
Date: Tuesday, July 26, 2011	Sheet 1 of 13	

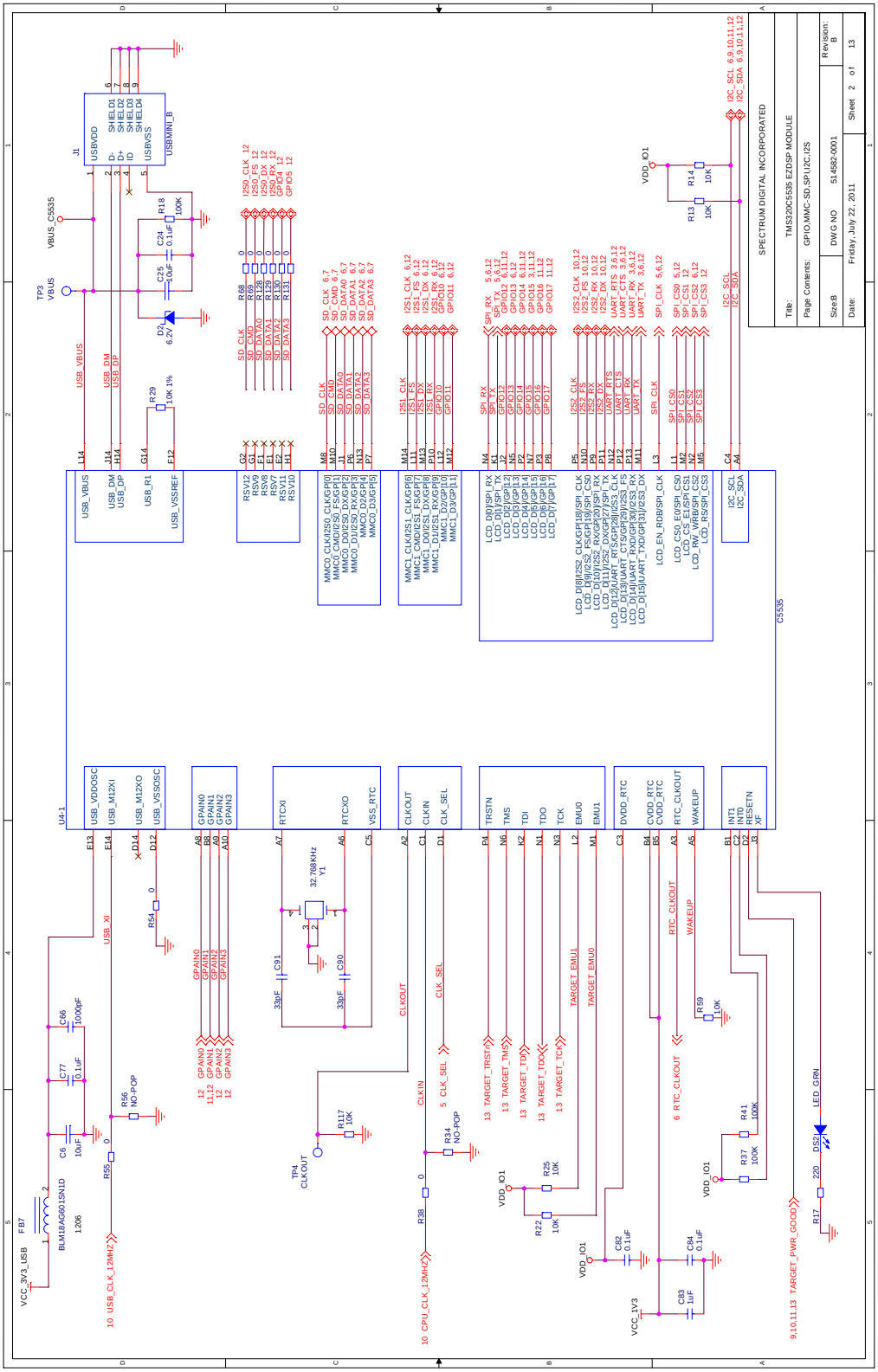
SPECTRUM DIGITAL INCORPORATED
Title: TMS320C5535 EZDSP MODULE
Page Contents: GPIO,MMC-SD,SPI,I2C,I2S
Size:B
DWG NO 514582-0001
Revision: B
Date: Friday, July 22, 2011
Sheet 2 of 13
U4-1
C5535
J1
USBVDD
USBVSS
USBMINI_B
TP3
VBUS
VBUS_C5535
USB_VBUS
USB_DM
USB_DP
USB_R1
USB_VSSREF
RSV12
RSV9
RSV8
RSV7
RSV11
RSV10
MMC0_CLK/I2S0_CLK/GP[0]
MMC0_CMD/I2S0_FS/GP[1]
MMC0_D0/I2S0_DX/GP[2]
MMC0_D1/I2S0_RX/GP[3]
MMC0_D2/GP[4]
MMC0_D3/GP[5]
MMC1_CLK/I2S1_CLK/GP[6]
MMC1_CMD/I2S1_FS/GP[7]
MMC1_D0/I2S1_DX/GP[8]
MMC1_D1/I2S1_RX/GP[9]
MMC1_D2/GP[10]
MMC1_D3/GP[11]
LCD_D0/I/SPI_RX
LCD_D1/I/SPI_TX
LCD_D2/I/GP[12]
LCD_D3/I/GP[13]
LCD_D4/I/GP[14]
LCD_D5/I/GP[15]
LCD_D6/I/GP[16]
LCD_D7/I/GP[17]
LCD_D8/I/I2S2_CLK/GP[18]/SPI_CLK
LCD_D9/I/I2S2_FS/GP[19]/SPI_CS0
LCD_D10/I/I2S2_RX/GP[20]/SPI_RX
LCD_D11/I/I2S2_DX/GP[27]/SPI_TX
LCD_D12/I/UART_RTS/GP[28]/I2S3_CLK
LCD_D13/I/UART_CTS/GP[29]/I2S3_FS
LCD_D14/I/UART_RXD/GP[30]/I2S3_RX
LCD_D15/I/UART_TXD/GP[31]/I2S3_DX
LCD_EN_RDB/SPI_CLK
LCD_CS0_E0/SPI_CS0
LCD_CS_E1/SPI_CS1
LCD_RW_WRB/SPI_CS2
LCD_RS/SPI_CS3
I2C_SCL
I2C_SDA
USB_VDDOSC
USB_M12XI
USB_M12XO
USB_VSSOSC
GPAIN0
GPAIN1
GPAIN2
GPAIN3
RTCXI
RTCXO
VSS_RTC
CLKOUT
CLKIN
CLK_SEL
TRSTN
TMS
TDI
TDO
TCK
EMU0
EMU1
DVDD_RTC
CVDD_RTC
RTC_CLKOUT
WAKEUP
INT1
INT0
RESETN
XF
32.768KHz
Y1
TP4
CLKOUT
VCC_3V3_USB
FB7
BLM18AG601SN1D
1206
10 USB_CLK_12MHZ
10 CPU_CLK_12MHZ
9,10,11,13 TARGET_PWR_GOOD
LED_GRN
VDD_IO1
VCC_1V3
SD_CLK
SD_CMD
SD_DATA0
SD_DATA1
SD_DATA2
SD_DATA3
I2S0_CLK 12
I2S0_FS 12
I2S0_DX 12
I2S0_RX 12
GPIO4 12
GPIO5 12
I2S1_CLK 6,12
I2S1_FS 6,12
I2S1_DX 6,12
I2S1_RX 6,12
GPIO10 6,12
GPIO11 6,12
SPI_RX 5,6,12
SPI_TX 5,6,12
GPIO12 6,11,12
GPIO13 6,12
GPIO14 6,11,12
GPIO15 3,11,12
GPIO16 11,12
GPIO17 11,12
I2S2_CLK 10,12
I2S2_FS 10,12
I2S2_RX 10,12
I2S2_DX 10,12
UART_RTS 3,6,12
UART_CTS 3,6,12
UART_RX 3,6,12
UART_TX 3,6,12
SPI_CLK 5,6,12
SPI_CS0 5,12
SPI_CS1 12
SPI_CS2 6,12
SPI_CS3 12
I2C_SCL 6,9,10,11,12
I2C_SDA 6,9,10,11,12
R68 0
R69 0
R128 0
R129 0
R130 0
R131 0
R29 10K 1%
R18 100K
C24 0.1uF
C25 10uF
D2 6.2V
R14 10K
R13 10K
C66 1000pF
C77 0.1uF
C6 10uF
R56 NO-POP
R55 0
R54 0
R117 10K
R34 NO-POP
R38 0
R25 10K
R22 10K
C82 0.1uF
C84 0.1uF
C83 1uF
R59 10K
R41 100K
R37 100K
R17 220
D52
C91 33pF
C90 33pF

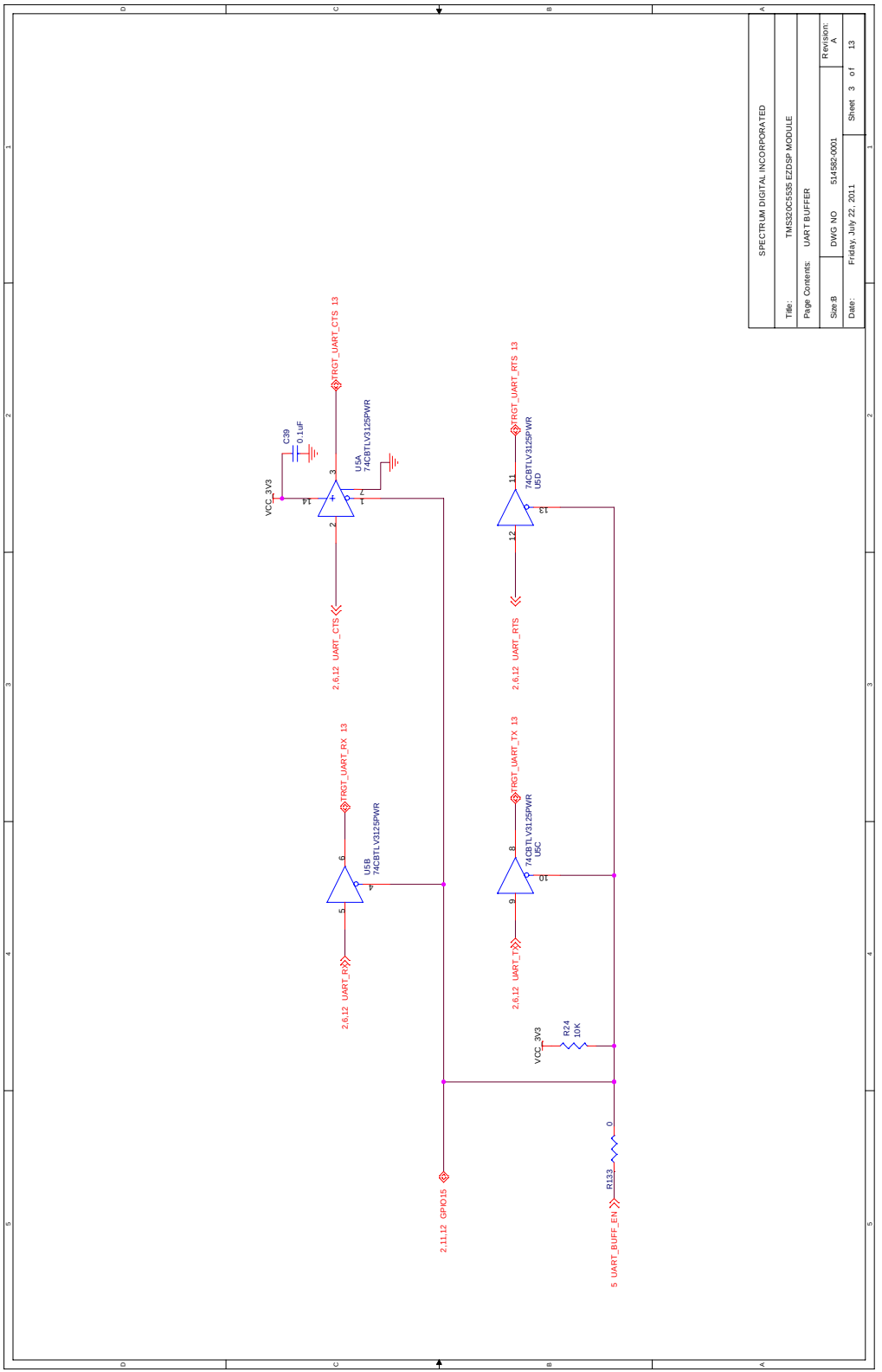
SPECTRUM DIGITAL INCORPORATED
Title: TMS320C5535 EZDSP MODULE
Page Contents: UART BUFFER
Size:B
DWG NO 5145B2-0001
Revision: A
Date: Friday, July 22, 2011
Sheet 3 of 13
TRGT_UART_CTS 13
TRGT_UART_RTS 13
TRGT_UART_RX 13
TRGT_UART_TX 13
C39 0.1uF
VCC_3V3
U5A 74CBTLV3125PWR
U5B 74CBTLV3125PWR
U5C 74CBTLV3125PWR
U5D 74CBTLV3125PWR
2.6.12 UART_CTS
2.6.12 UART_RTS
2.6.12 UART_RX
2.6.12 UART_TX
R24 10K
R133 0
2.11.12 GPIO15
5 UART_BUFF_EN

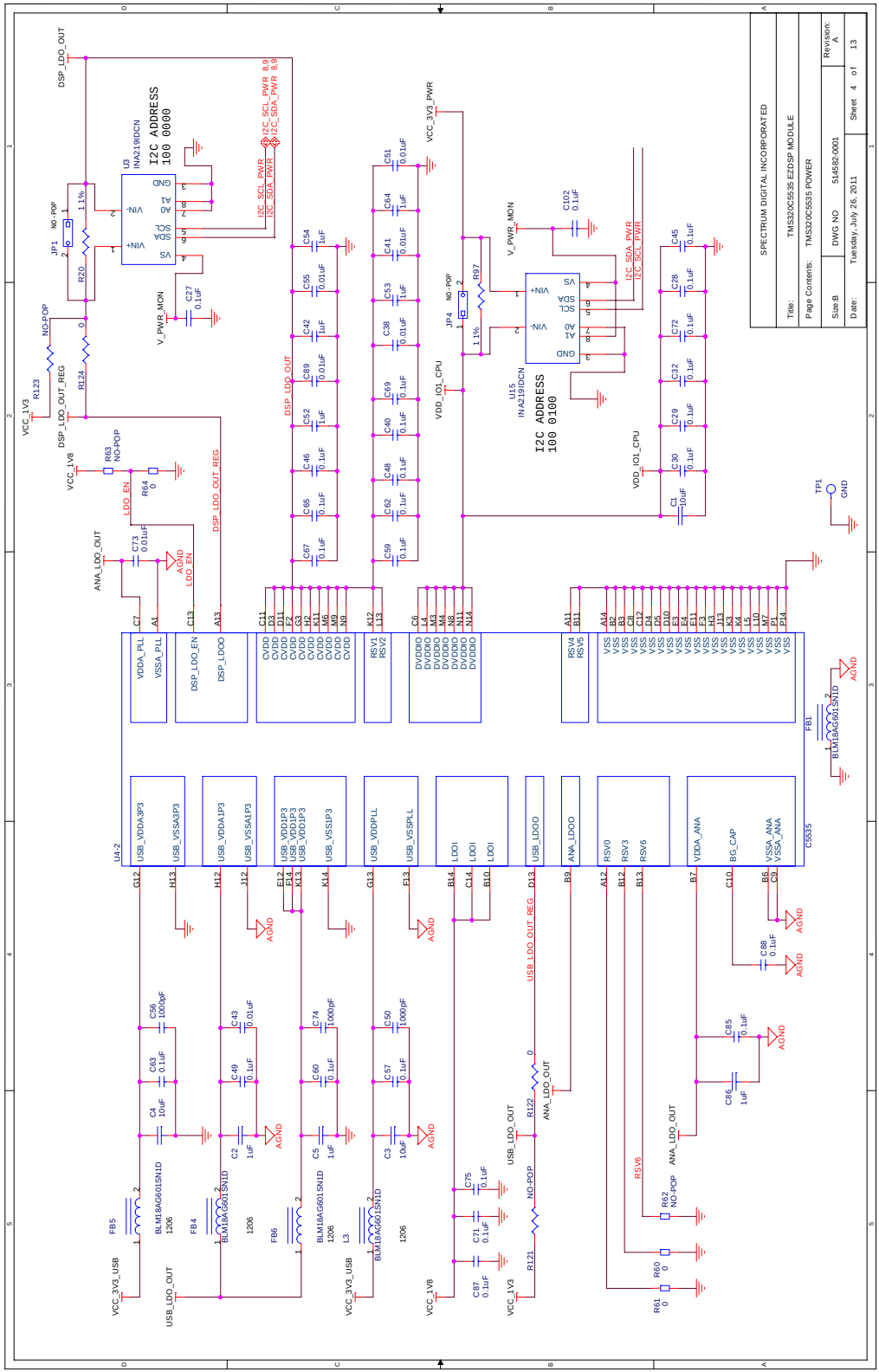
SPECTRUM DIGITAL INCORPORATED
Title: TMS320C5535 EZDSP MODULE
Page Contents: TMS320C5535 POWER
Size: B
DWG NO 514582-0001
Revision: A
Date: Tuesday, July 26, 2011
Sheet 4 of 13
I2C ADDRESS 100 0000
I2C ADDRESS 100 0100
U3 INA219IDCN
U15 INA219IDCN
U4-2
C5535
DSP_LDO_OUT
DSP_LDO_OUT_REG
VCC_1V3
VCC_1V8
VCC_3V3_PWR
VCC_3V3_USB
VDD_IO1_CPU
V_PWR_MON
ANA_LDO_OUT
USB_LDO_OUT
USB_LDO_OUT_REG
LDO_EN
AGND
TP1
GND

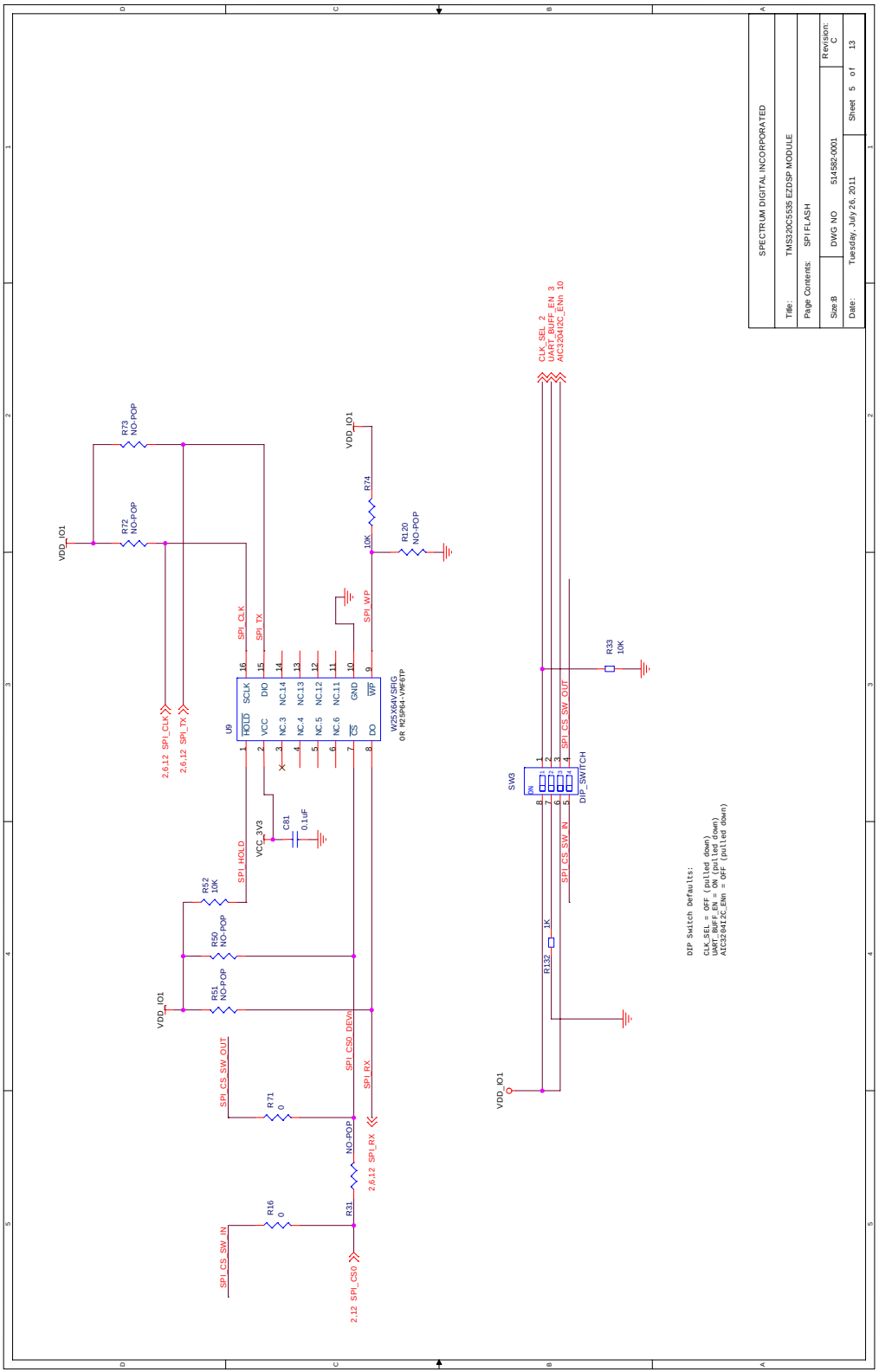
SPECTRUM DIGITAL INCORPORATED
Title: TMS320C5535 EZDSP MODULE
Page Contents: SPI FLASH
Size:B DWG NO 514582-0001 Revision: C
Date: Tuesday, July 26, 2011 Sheet 5 of 13
U9
W25X64V-SSIG
8R M25P64-VMF6TP
HOLD SCLK VCC DIO NC.3 NC.14 NC.4 NC.13 NC.5 NC.12 NC.6 NC.11 CS GND DO WP
SPI_CLK
SPI_TX
SPI_WP
SPI_HOLD
VCC_3V3
C81 0.1uF
R73 NO-POP
R72 NO-POP
R74 10K
RL20 NO-POP
R52 10K
R50 NO-POP
R51 NO-POP
R71 0
R16 0
R31 NO-POP
VDD_IO1
2,6,12 SPI_CLK
2,6,12 SPI_TX
2,6,12 SPI_RX
2,12 SPI_CS0
SPI_CS_SW_OUT
SPI_CS_SW_IN
SPI_CS0_DEVn
SW3
DIP_SWITCH
R33 10K
R132 1K
CLK_SEL_2
UART_BUF_EN_3
AIC3204I2C_ENn 10
DIP Switch Defaults:
CLK_SEL = OFF (pulled down)
UART_BUF_EN = ON (pulled down)
AIC3204I2C_ENn = OFF (pulled down)

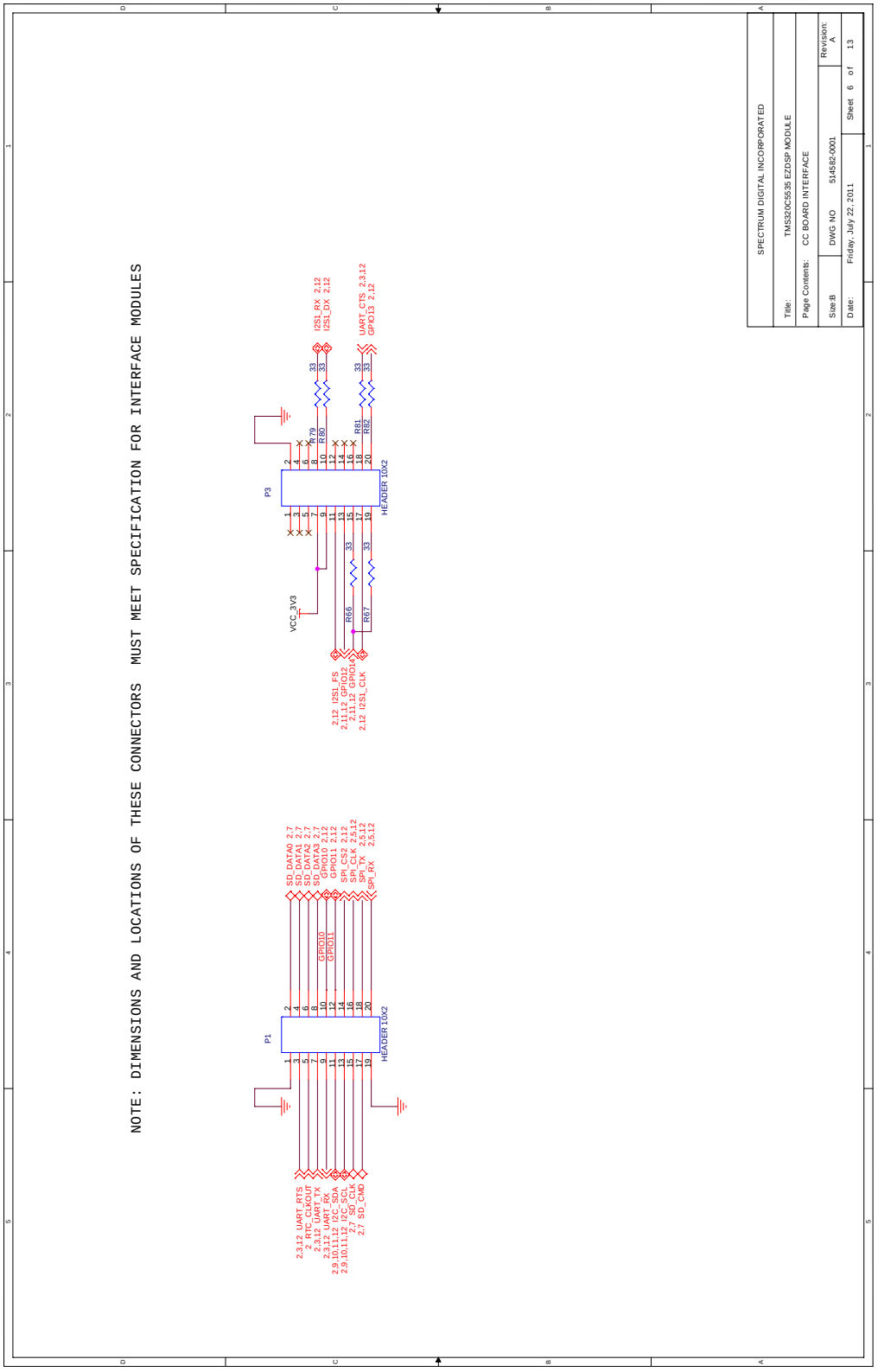
NOTE: DIMENSIONS AND LOCATIONS OF THESE CONNECTORS MUST MEET SPECIFICATION FOR INTERFACE MODULES
P1
HEADER 10X2
P3
HEADER 10X2
VCC_3V3
R66
R67
R79
R80
R81
R82
SD_DATA0 2,7
SD_DATA1 2,7
SD_DATA2 2,7
SD_DATA3 2,7
GPIO10 2,12
GPIO11 2,12
SPI_CS2 2,12
SPI_CLK 2,3,12
SPI_TX 2,3,12
SPI_RX 2,5,12
2,3,12 UART_RTS
2 RTC_CLKOUT
2,3,12 UART_TX
2,3,12 UART_RX
2,9,10,11,12 I2C_SDA
2,9,10,11,12 I2C_SCL
2,7 SD_CLK
2,7 SD_CMD
2,12 I2SI_FS
2,11,12 GPIO12
2,11,12 GPIO11
2,12 I2SI_CLK
I2SI_RX 2,12
I2SI_DX 2,12
UART_CTS 2,3,12
GPIO13 2,12
SPECTRUM DIGITAL INCORPORATED
Title: TMS320C5535 EZDSP MODULE
Page Contents: CC BOARD INTERFACE
Size:B
DWG NO 514582-0001
Revision: A
Date: Friday, July 22, 2011
Sheet 6 of 13

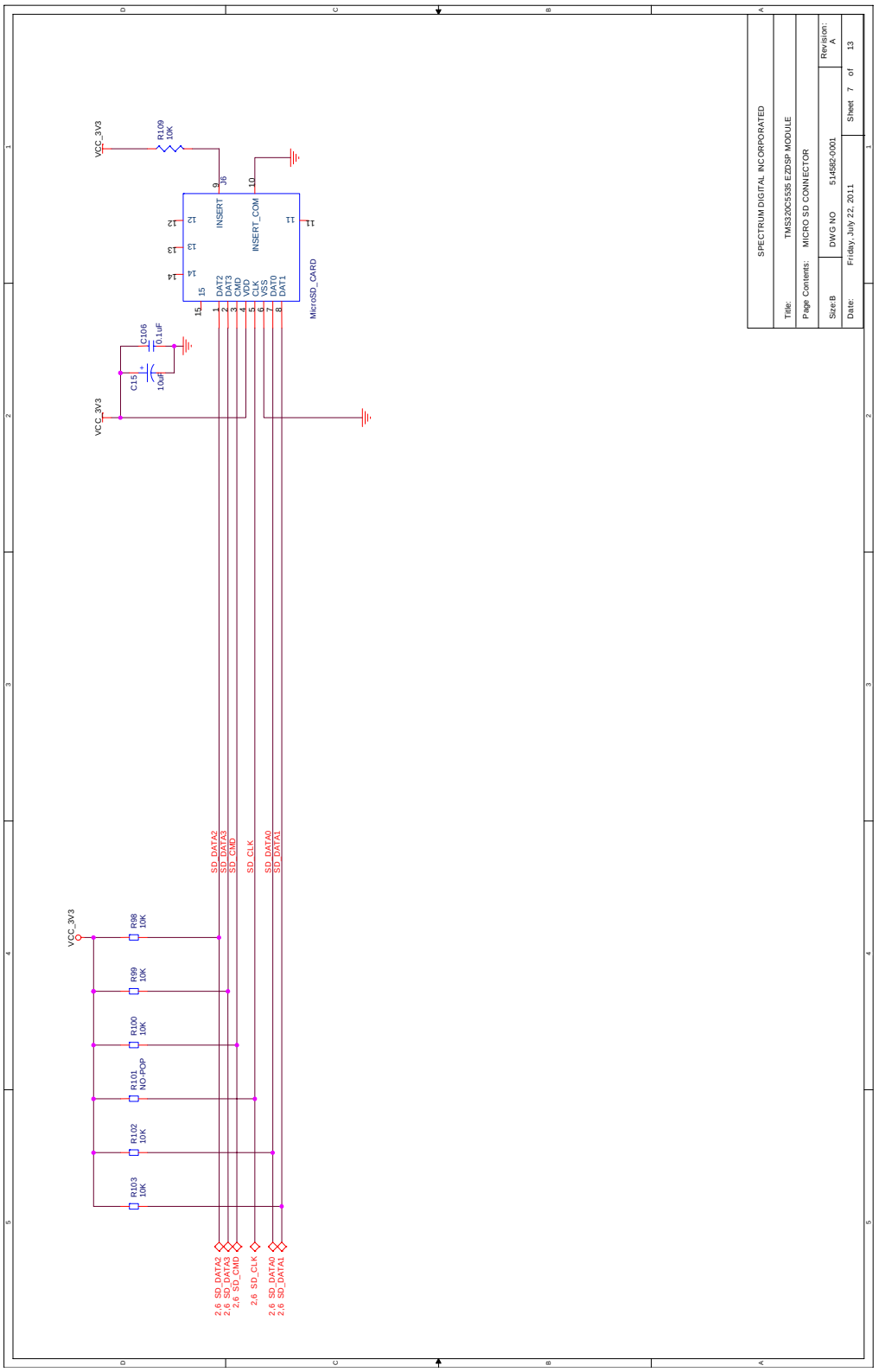
SPECTRUM DIGITAL INCORPORATED
Title: TMS320C5535 EZDSP MODULE
Page Contents: MICRO SD CONNECTOR
Size:B DWG NO 514582-0001 Revision: A
Date: Friday, July 22, 2011 Sheet 7 of 13
VCC_3V3
R109 10K
MicroSD_CARD
INSERT
INSERT_COM
DAT2
DAT3
CMD
VDD
CLK
VSS
DAT0
DAT1
C106 0.1uF
C15 10uF
R98 10K
R99 10K
R100 10K
R101 NO-POP
R102 10K
R103 10K
SD_DATA2
SD_DATA3
SD_CMD
SD_CLK
SD_DATA0
SD_DATA1
2.6 SD_DATA2
2.6 SD_DATA3
2.6 SD_CMD
2.6 SD_CLK
2.6 SD_DATA0
2.6 SD_DATA1

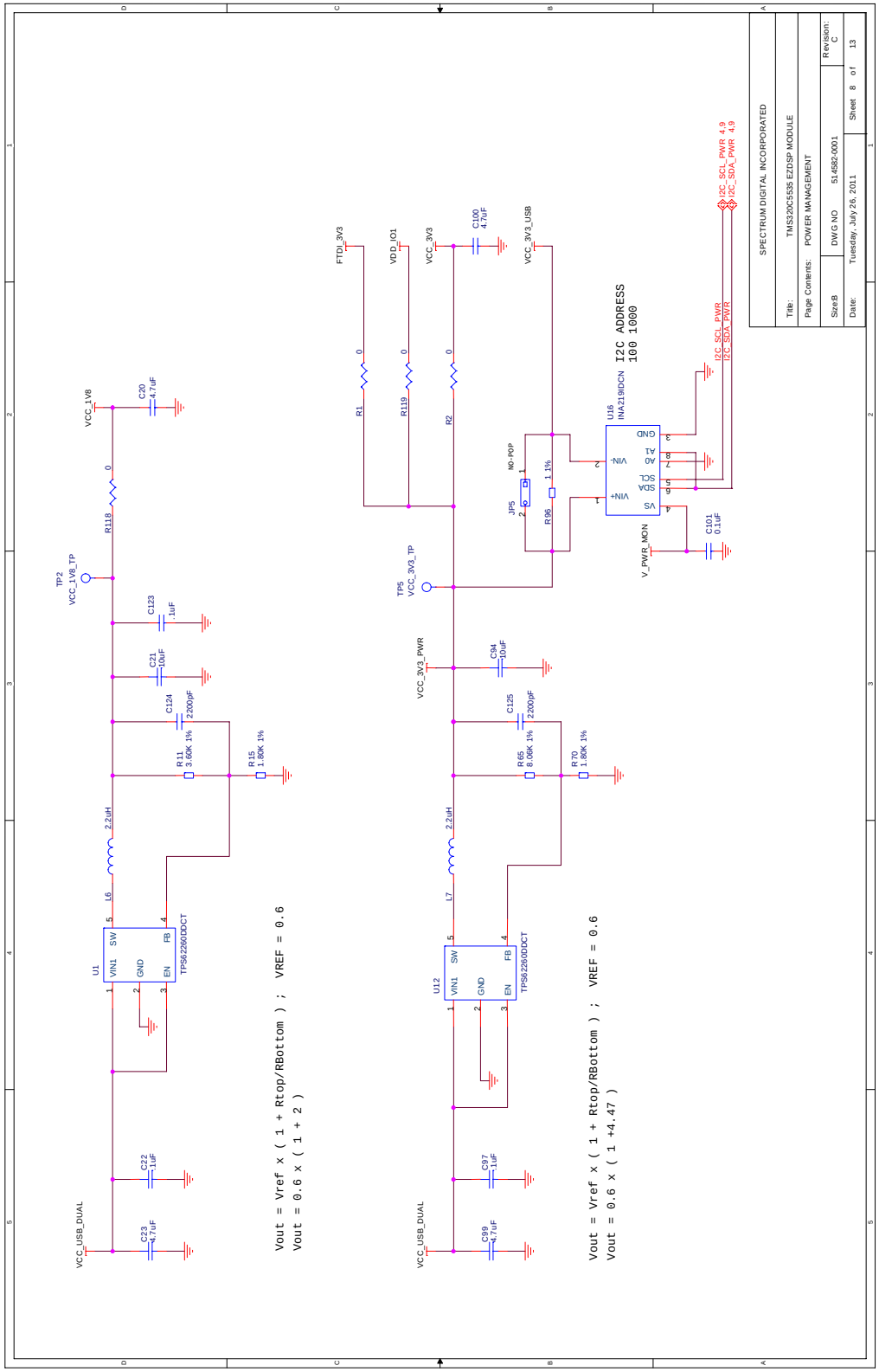
SPECTRUM DIGITAL INCORPORATED
Title: TMS320C5535 EZDSP MODULE
Page Contents: POWER MANAGEMENT
Size:B DWG NO 514582-0001 Revision: C
Date: Tuesday, July 26, 2011 Sheet 8 of 13
I2C ADDRESS
100 1000
Vout = Vref x (1 + Rtop/RBottom) ; VREF = 0.6
Vout = 0.6 x (1 + 2)
Vout = Vref x (1 + Rtop/RBottom) ; VREF = 0.6
Vout = 0.6 x (1 +4.47)

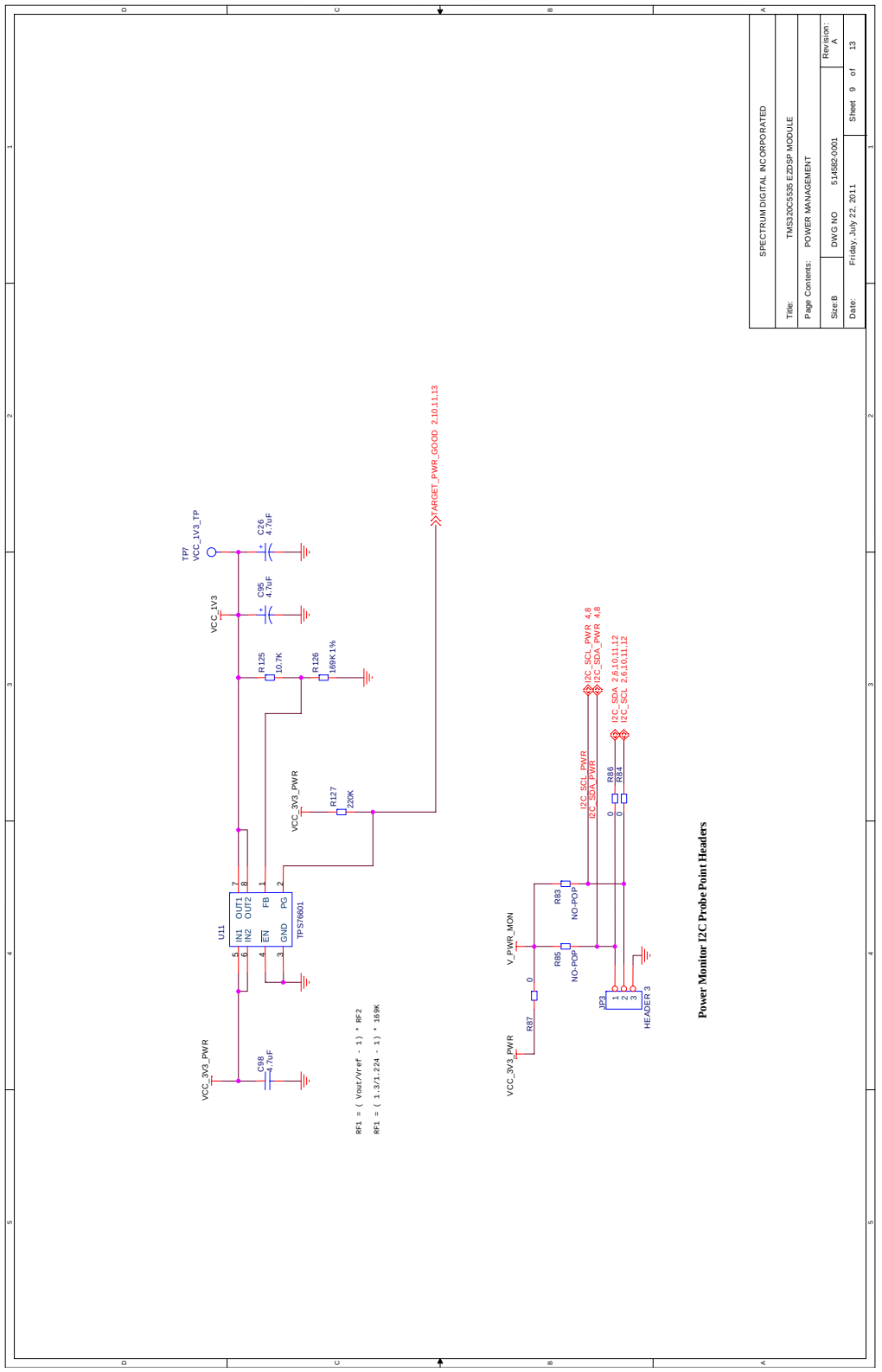
SPECTRUM DIGITAL INCORPORATED
Title: TMS320C5535 EZDSP MODULE
Page Contents: POWER MANAGEMENT
Size:B DWG NO 514582-0001 Revision: A
Date: Friday, July 22, 2011 Sheet 9 of 13
Power Monitor I2C Probe Point Headers
TARGET_PWR_GOOD 2,10,11,13
VCC_1V3_TP
VCC_1V3
VCC_3V3_PWR
U11
TPS76601
R125 10.7K
R126 169K 1%
R127 220K
C26 4.7uF
C95 4.7uF
C98 4.7uF
V_PWR_MON
R87 0
R83 NO-POP
R85 NO-POP
R86 0
R84 0
I2C_SCL_PWR 4,8
I2C_SDA_PWR 4,8
I2C_SDA 2,6,10,11,12
I2C_SCL 2,6,10,11,12
JP3
HEADER 3
RF1 = (Vout/Vref - 1) * RF2
RF1 = (1.3/1.224 - 1) * 169K

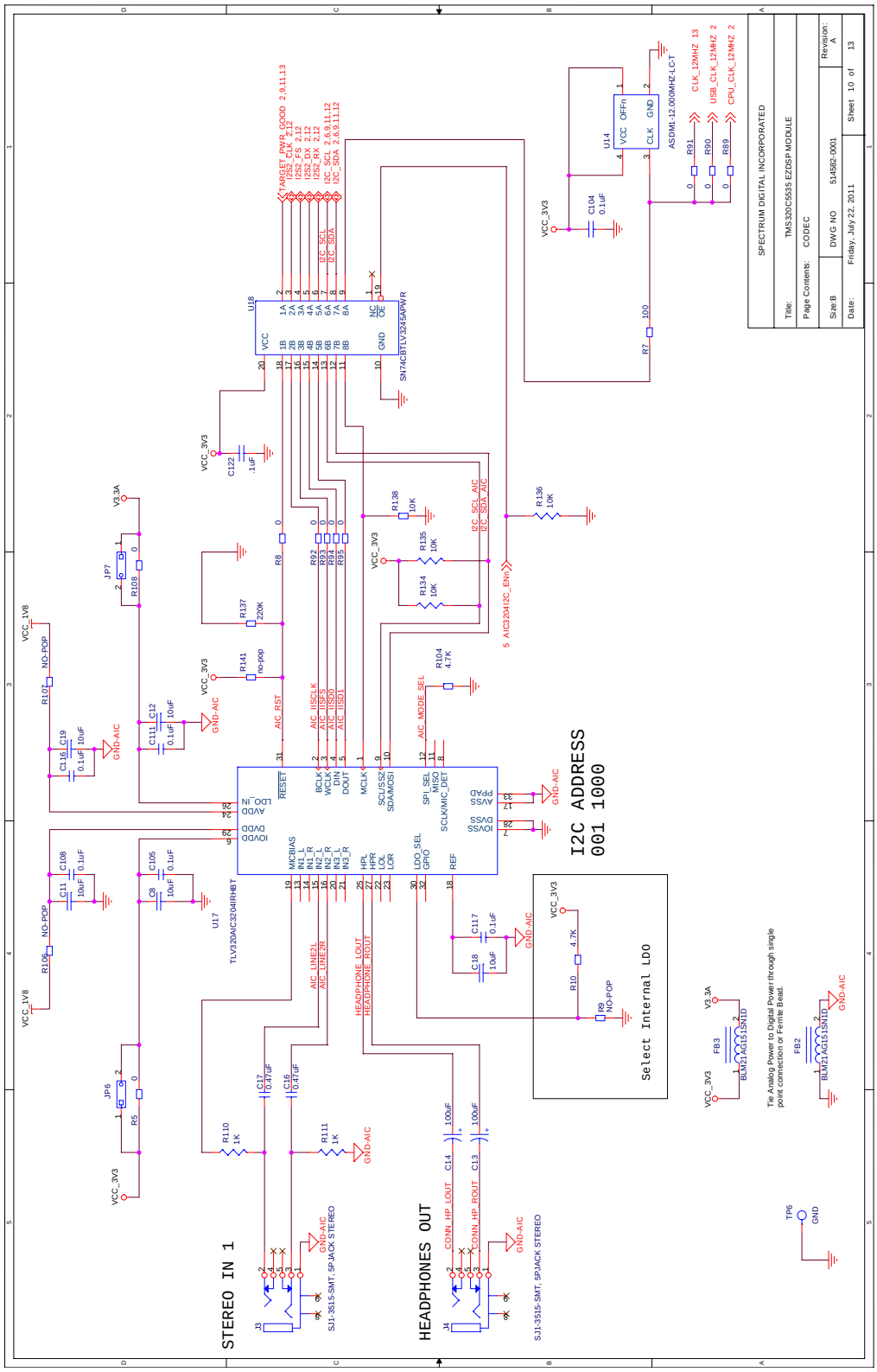
SPECTRUM DIGITAL INCORPORATED
Title: TMS320C5535 EZDSP MODULE
Page Contents: CODEC
Size: B
DWG NO 514582-0001
Revision: A
Date: Friday, July 22, 2011
Sheet 10 of 13
I2C ADDRESS
001 1000
Select Internal LDO
STEREO IN 1
HEADPHONES OUT
Tie Analog Power to Digital Power through single point connection or Ferrite Bead.
TARGET_PWR_GOOD 2,9,11,13
I2S2_FS 2,12
I2S2_CLK 2,12
I2S2_DX 2,12
I2S2_RX 2,12
I2C_SCL 2,6,9,11,12
I2C_SDA 2,6,9,11,12
CLK_12MHZ 13
USB_CLK_12MHZ 2
CPU_CLK_12MHZ 2
ASDMI-12.000MHZ-LC-T
SN74CBTLV3245APWR
TLV320AIC3204IRHBT
SJ1-3515-SMT, SP-JACK STEREO
GND-AIC
VCC_3V3
VCC_1V8
V3.3A

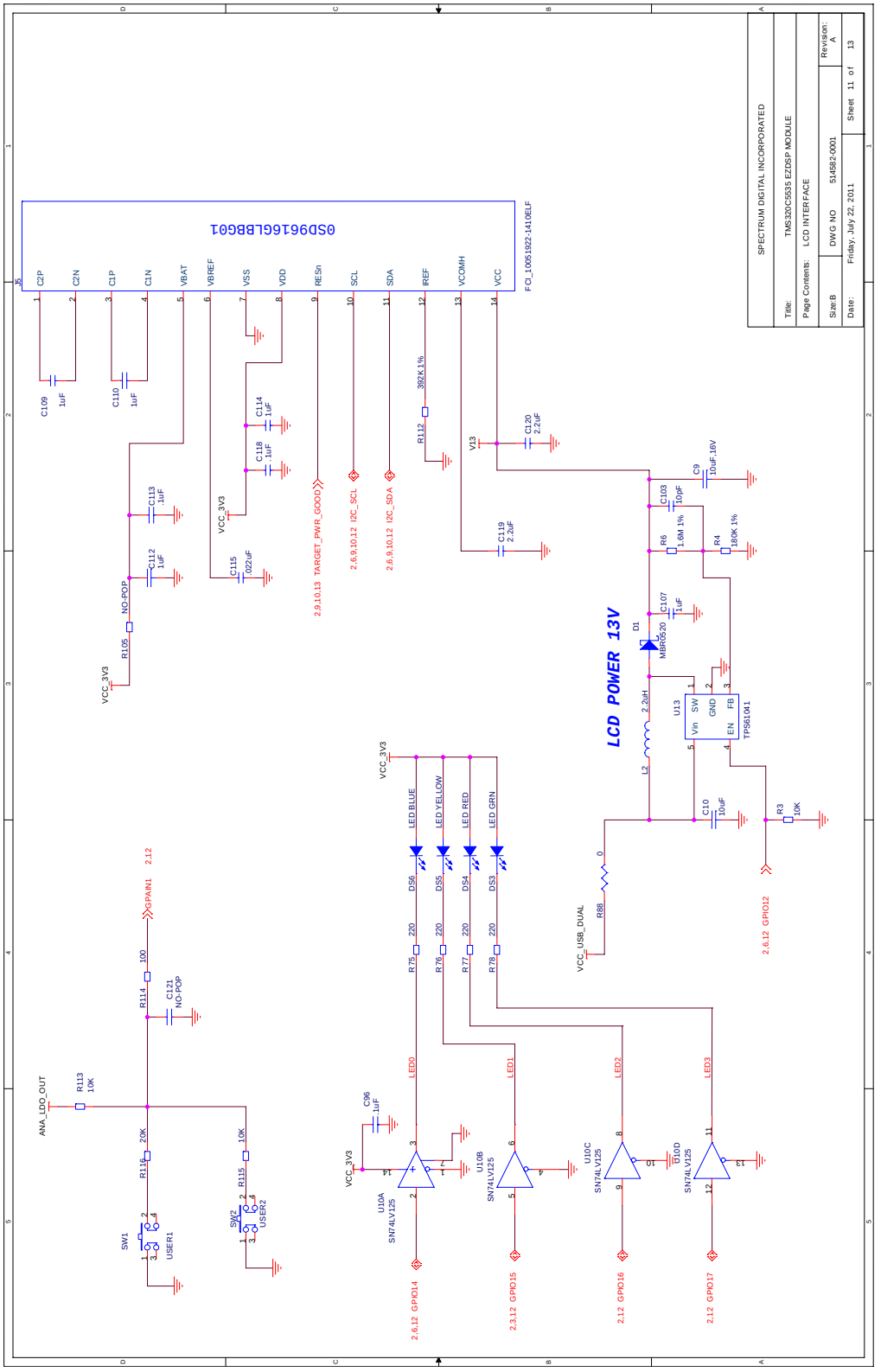
SPECTRUM DIGITAL INCORPORATED
Title: TMS320C5535 EZDSP MODULE
Page Contents: LCD INTERFACE
Size:B
DWG NO 514582-0001
Revision: A
Date: Friday, July 22, 2011
Sheet 11 of 13
0SD9616GLBBG01
FCI_10051922-1410ELF
LCD POWER 13V
TPS61041
MBR0520
SN74LV125
TARGET_PWR_GOOD
I2C_SCL
I2C_SDA
VCC_3V3
VCC_USB_DUAL
ANA_LDO_OUT
GPAIN1
LED BLUE
LED YELLOW
LED RED
LED GRN
LED0
LED1
LED2
LED3
2,6,12 GPIO14
2,3,12 GPIO15
2,12 GPIO16
2,12 GPIO17
2,6,12 GPIO12
2,9,10,13
2,6,9,10,12
2,6,9,10,12
2,12

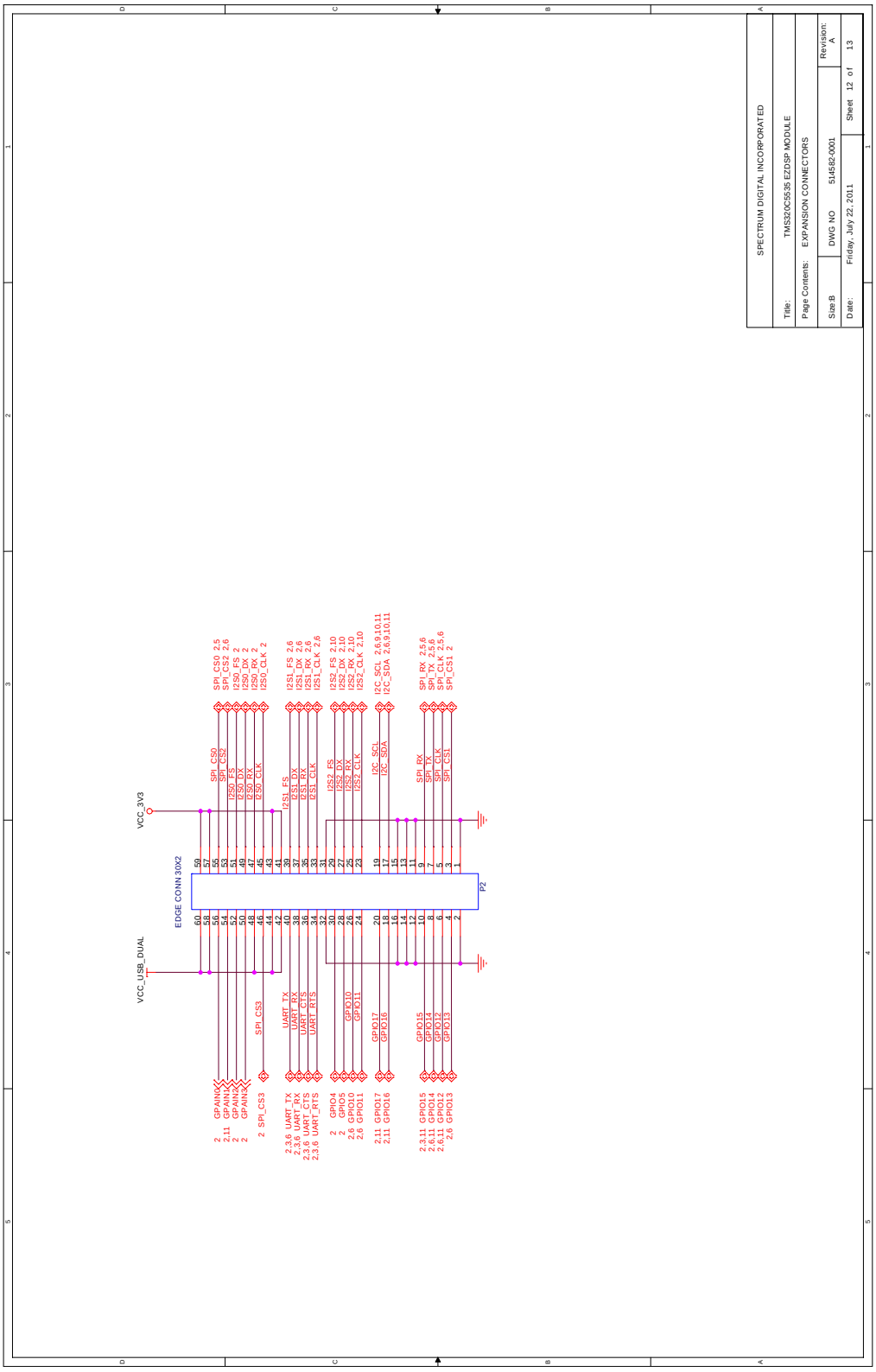
SPECTRUM DIGITAL INCORPORATED
Title: TMS320C5535 EZDSP MODULE
Page Contents: EXPANSION CONNECTORS
Size:B
DWG NO 514582-0001
Revision: A
Date: Friday, July 22, 2011
Sheet 12 of 13
EDGE CONN 30X2
P2
VCC_3V3
VCC_USB_DUAL
SPI_CS0
SPI_CS2
I2S0_DX
I2S0_RX
I2S0_CLK
I2S0_FS
I2S1_FS
I2S1_DX
I2S1_RX
I2S1_CLK
I2S2_FS
I2S2_DX
I2S2_RX
I2S2_CLK
I2C_SCL
I2C_SDA
SPI_RX
SPI_TX
SPI_CLK
SPI_CS1
UART_TX
UART_RX
UART_CTS
UART_RTS
GPIO10
GPIO11
GPIO17
GPIO16
GPIO15
GPIO14
GPIO12
GPIO13
GPAIN4
GPAIN3
GPAIN2
GPAIN1
GPIO4
GPIO5

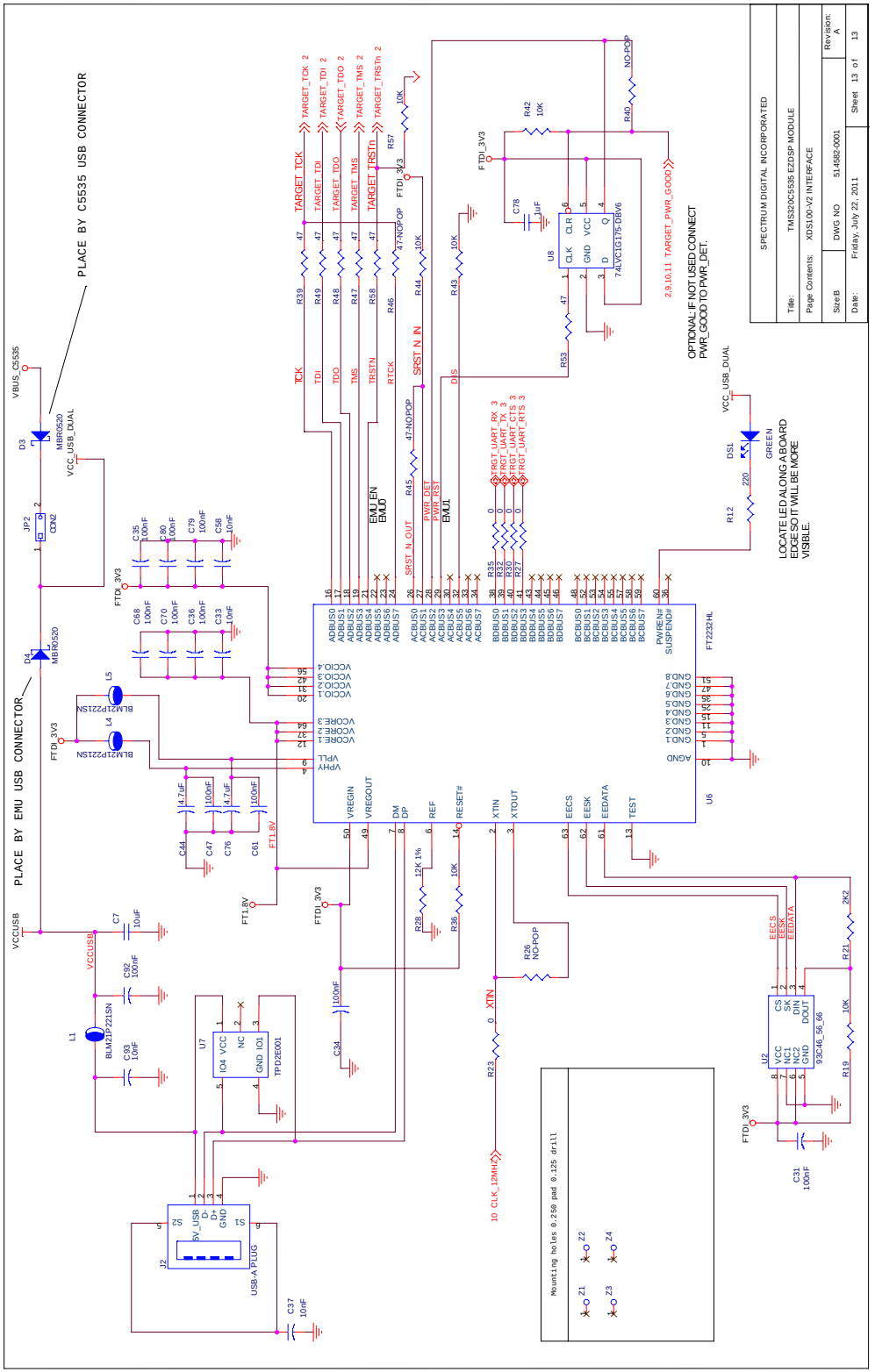
PLACE BY C5535 USB CONNECTOR
PLACE BY EMU USB CONNECTOR
SPECTRUM DIGITAL INCORPORATED
Title: TMS320C5535 EZDSP MODULE
Page Contents: XDS100-V2 INTERFACE
Size:B DWG NO 514582-0001 Revision: A
Date: Friday, July 22, 2011 Sheet 13 of 13
OPTIONAL: IF NOT USED CONNECT PWR_GOOD TO PWR_DET.
LOCATE LED ALONG A BOARD EDGE SO IT WILL BE MORE VISIBLE.
Mounting holes 0.250 pad 0.125 drill
FTDI_3V3
VCC_USB_DUAL
VCCUSB
FT1.8V
TARGET_TCK
TARGET_TDI
TARGET_TDO
TARGET_TMS
TARGET_TRSTn
TARGET_PWR_GOOD
FT2232HL
TPD2E001
93C46_56_66
74LVC1G175-DBV6
MBR0520
BLM21P221SN

Appendix B

Mechanical Information

This appendix contains the mechanical information about the TMS320C5535 eZdsp produced by Spectrum Digital.

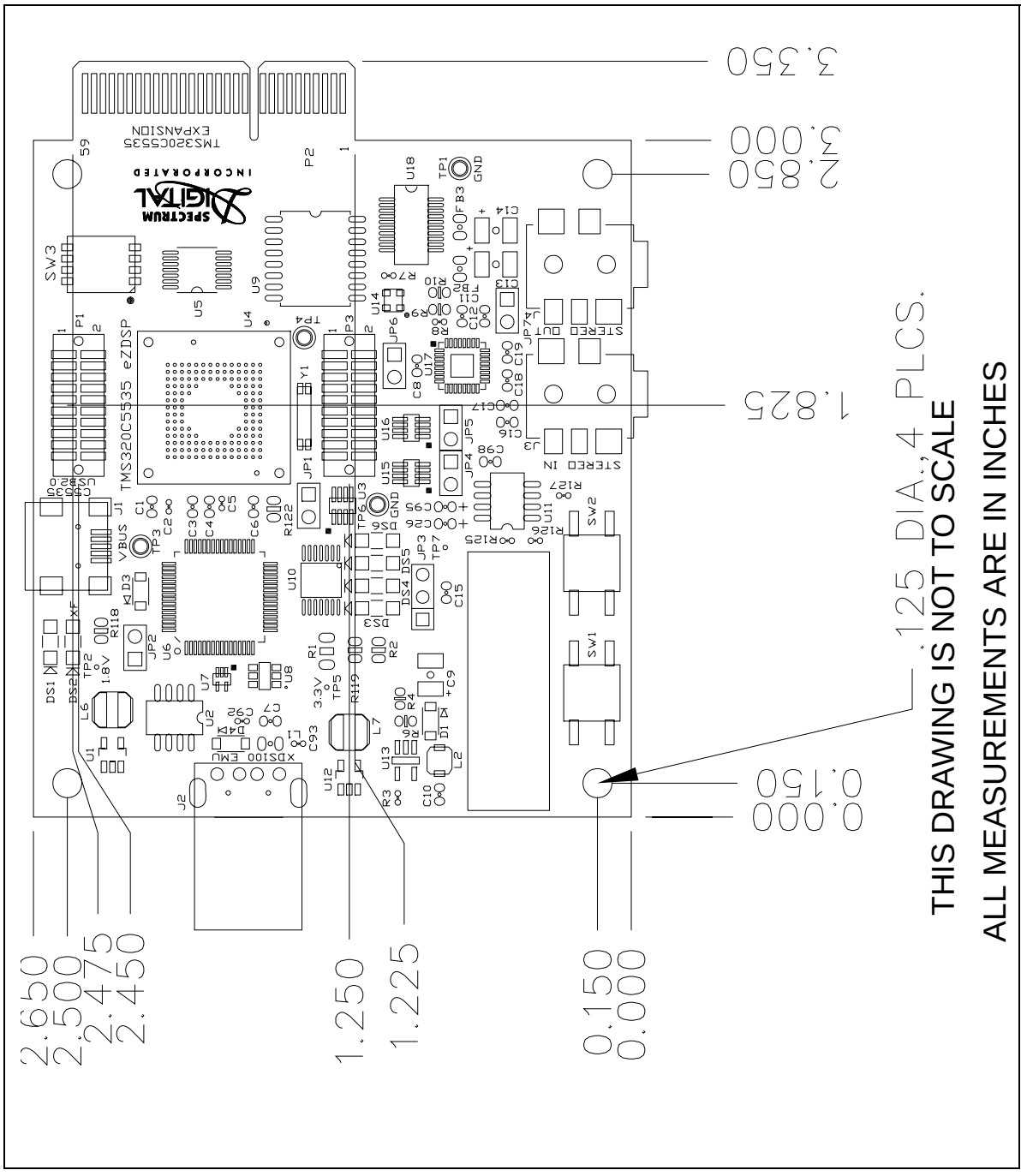
3.350
2.850
2.000
1.825
.125 DIA., 4 PLCS.
0.150
0.000
THIS DRAWING IS NOT TO SCALE
ALL MEASUREMENTS ARE IN INCHES
2.650
2.500
2.475
2.450
1.250
1.225
0.150
0.000

Printed in U.S.A., August 2011
514585-0001 Rev. A