Lecture 31
1st Order Transients – 2 of 5

general solution

$v_c(0) = 3v$

First Order RC Case

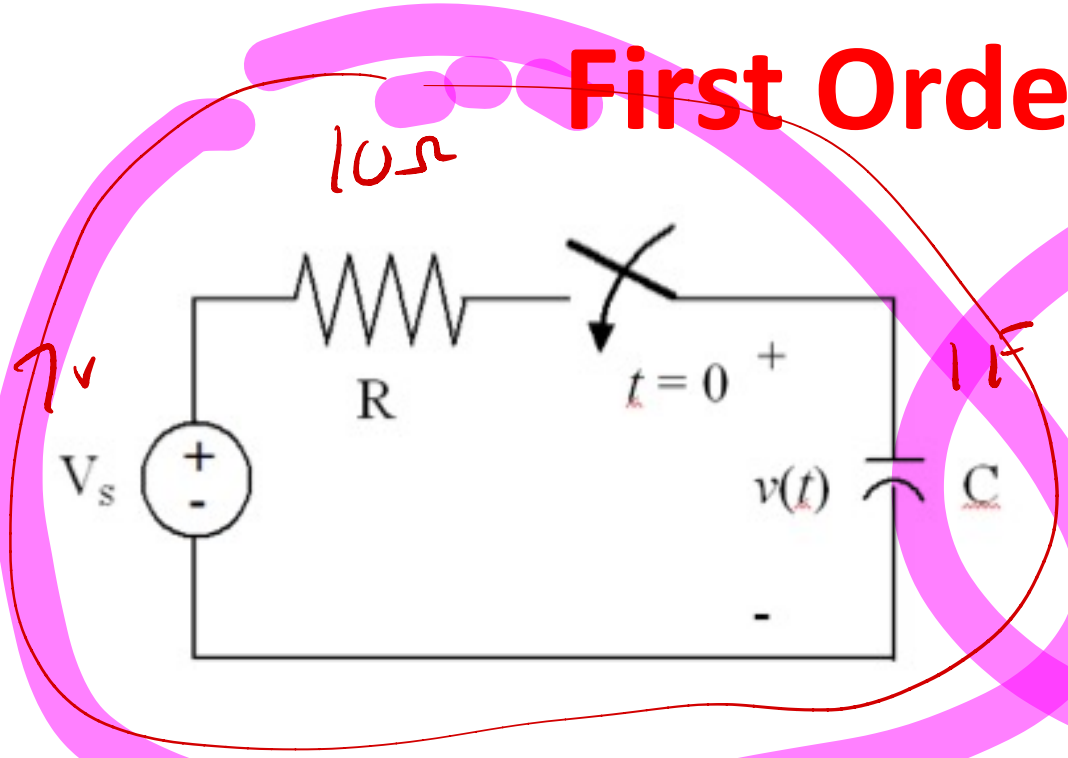

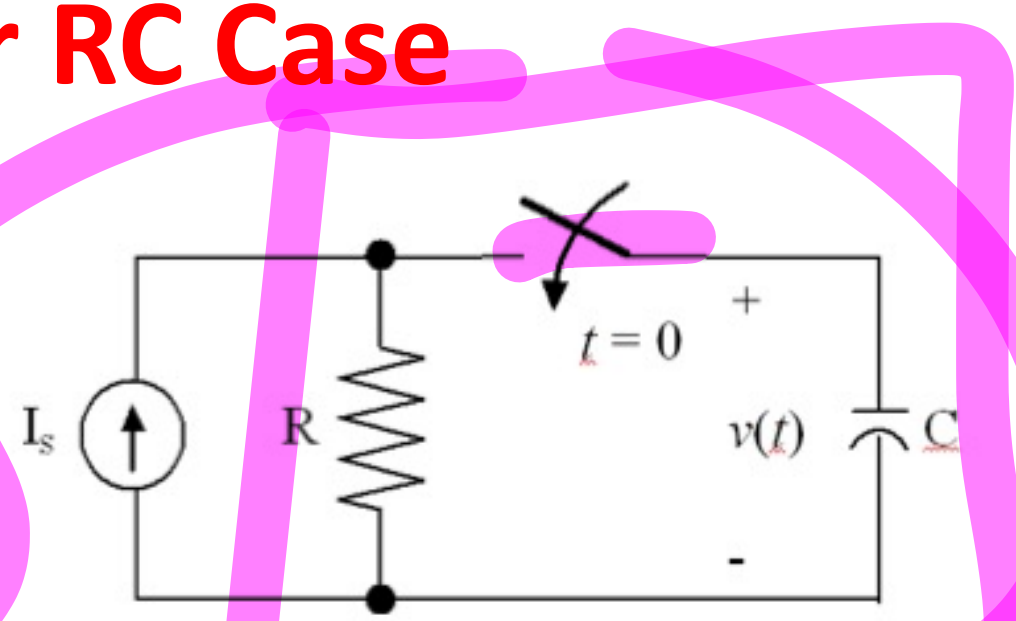

- Thevenin/Norton equivalents

$-7e^{-t/10}$ $t\ 10$

- Solution $$v(t) = (v_0 - v_\infty)\, e^{-t/RC} + v_\infty$$

10 10 3 10

$v(t) = 400\, e^{-200t} \quad t > 0 \quad V$

Example: switch changes a $\longrightarrow b$ at $t = 0$

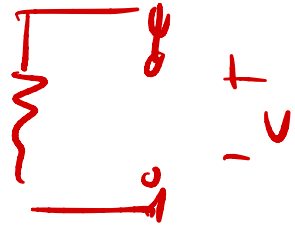

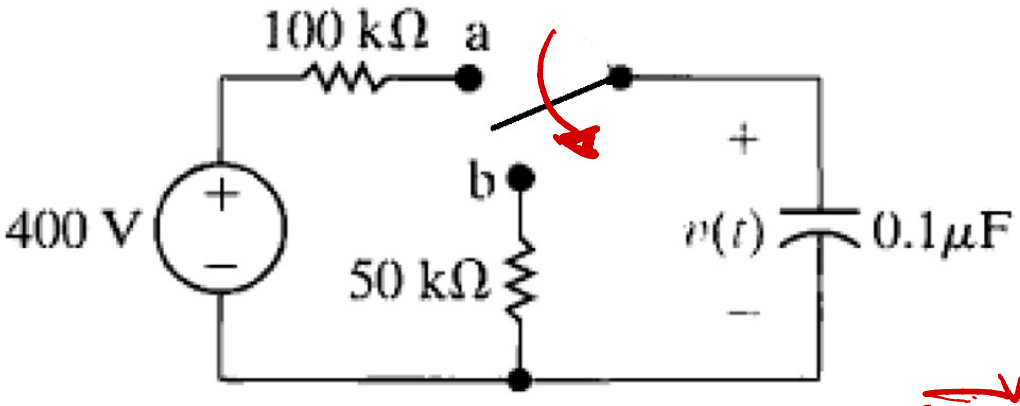

on and after $t=0$

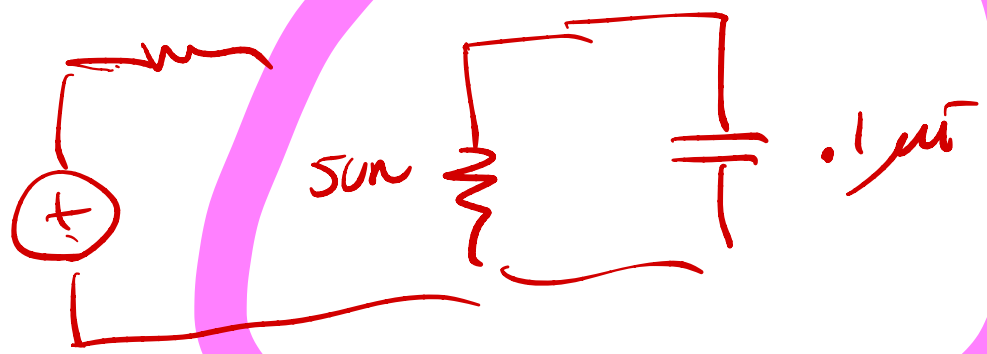

before $t=0$

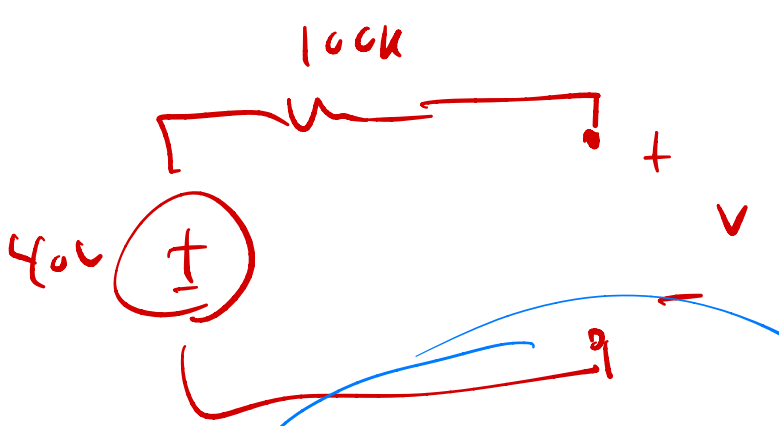

$V(0) = 400\ V$

$RC = 50 \cdot 10^3 \cdot 10^{-7}$

$= 5 \cdot 10^{-2} = \frac{1}{200}$

$V_\infty = 0$

$v(t) = -400\, e^{-100t} + 400$

Example: switch changes b ⟶ a at $t = 0$

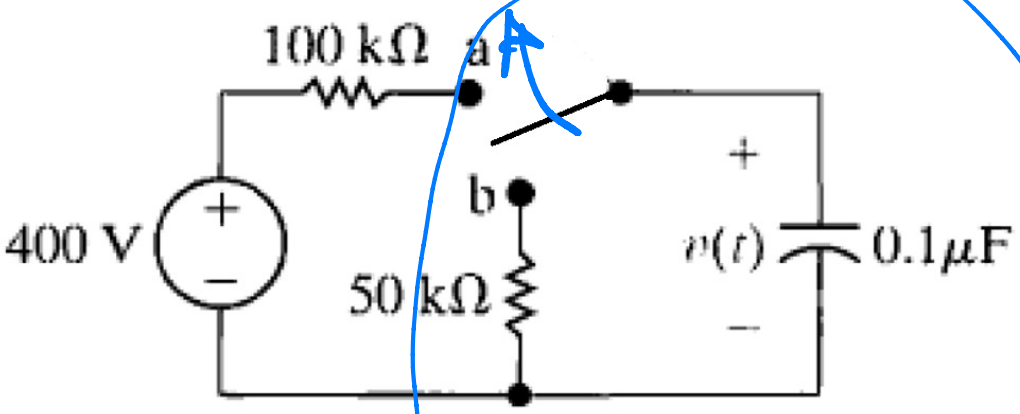

at and after $t=0$

$RC = 100k \cdot .1\mu F$

$= 10^5 \cdot 10^{-7} = 10^{-2}$

$= \frac{1}{100}$

before $t=0$

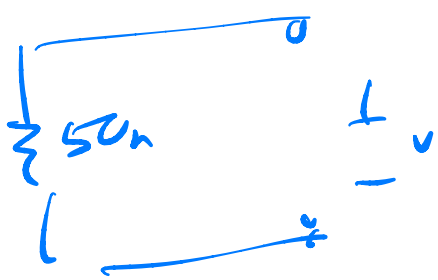

$v(0) = 0$

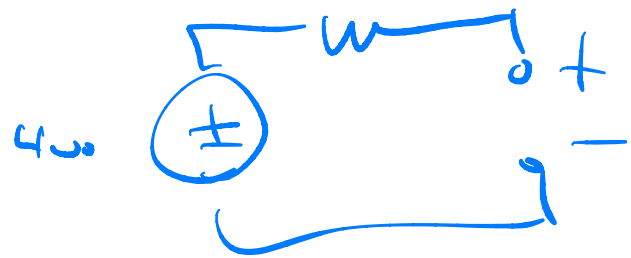

$v_a = 400\ V$

First Order RL Case

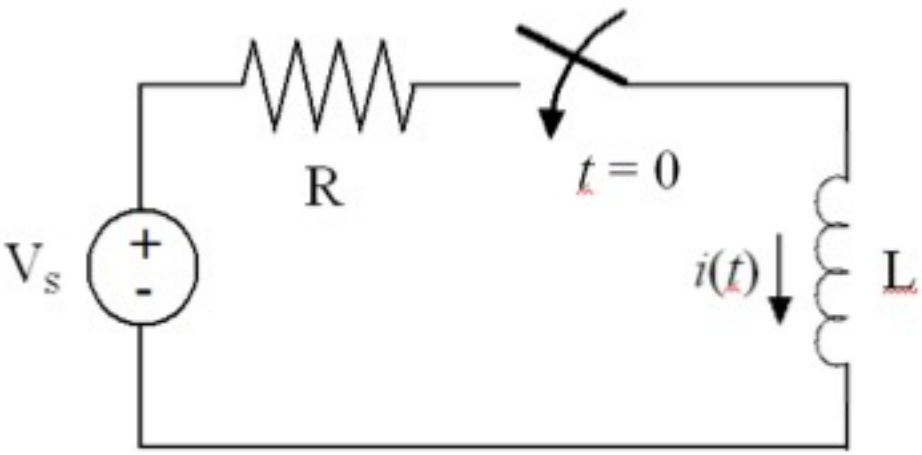

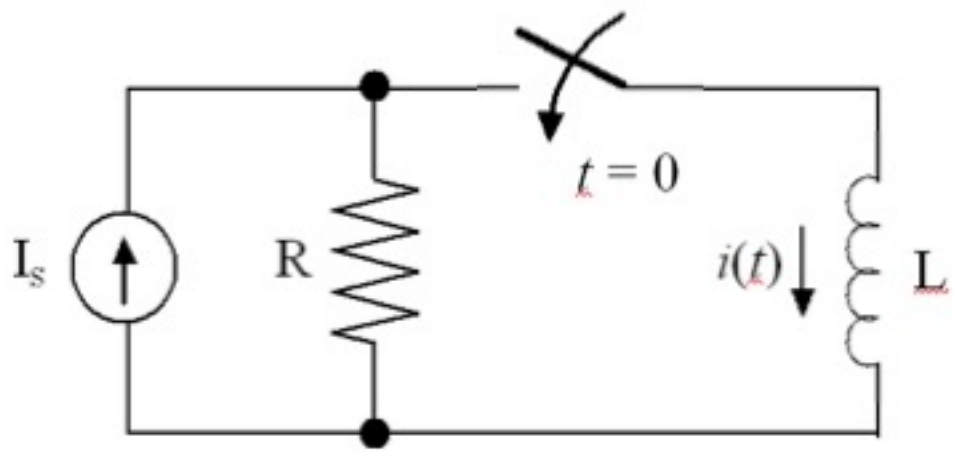

- Loop KVL equation: $\frac{di(t)}{dt} + \frac{R}{L}\, i(t) = \frac{1}{R} V_s$

- Solution: $i(t) = (i_0 - i_\infty)\, e^{-\frac{R}{L}t} + i_\infty$

Example: switch opens at $t = 0$

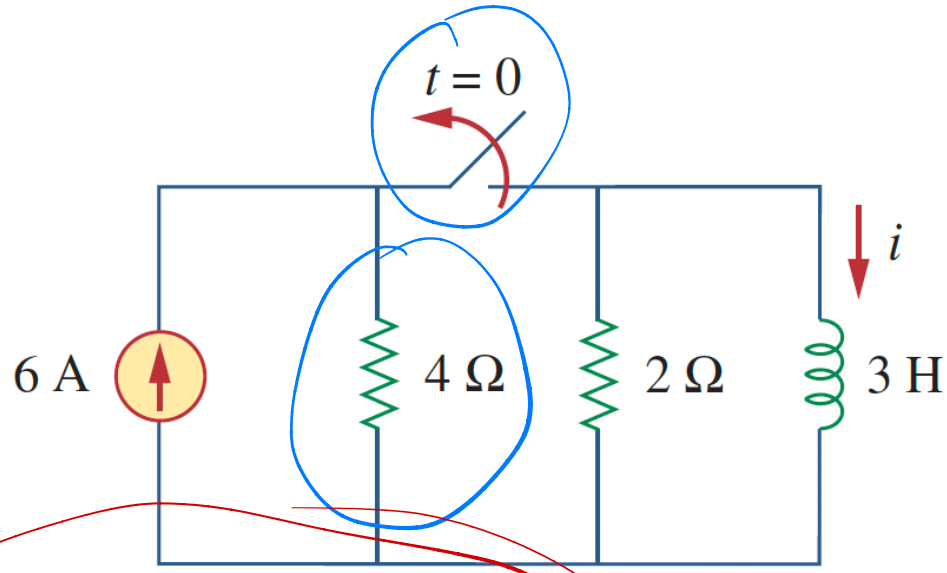

before $t=0$

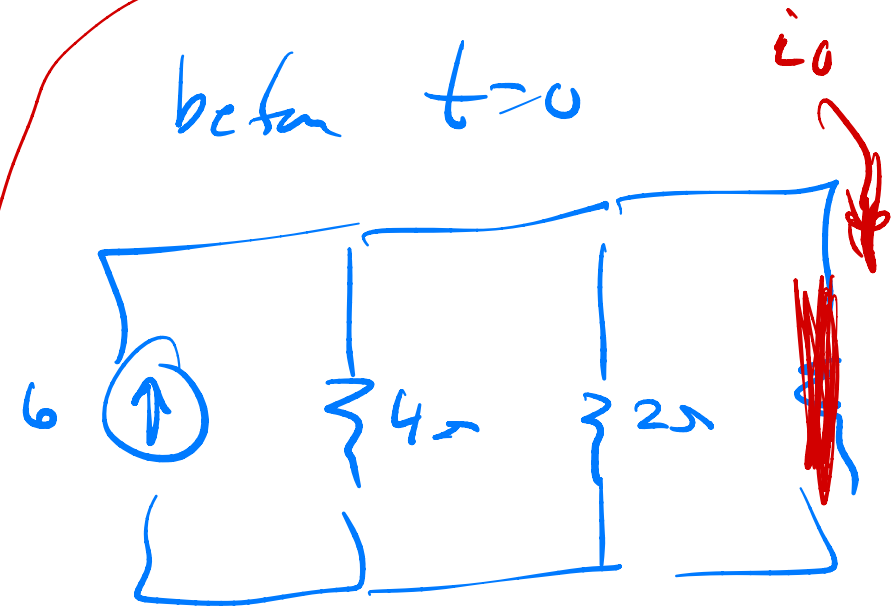

$i_0 = 6\,A$

$\frac{R}{L} = \frac{2}{3}$ $\quad i_\infty = 0\,A$

$$\boxed{6e^{-\frac{2t}{3}} \quad t>0\ A}$$

After $t=0$

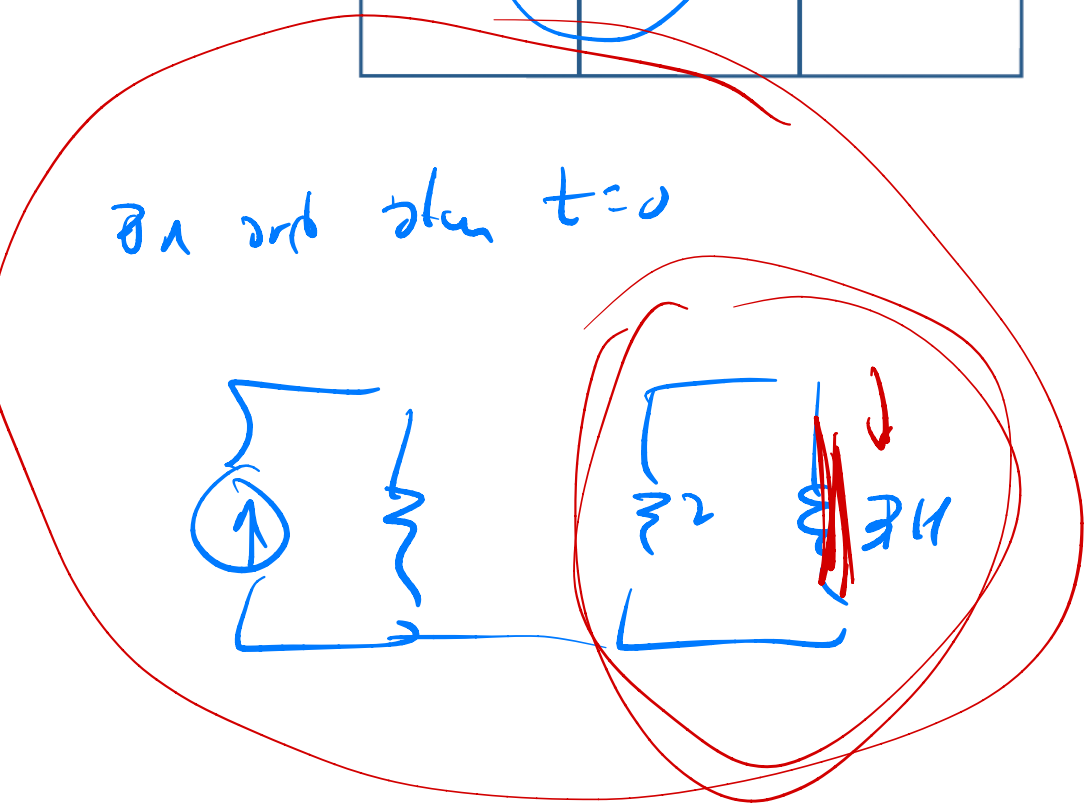

Example: switch closes at $t = 0$

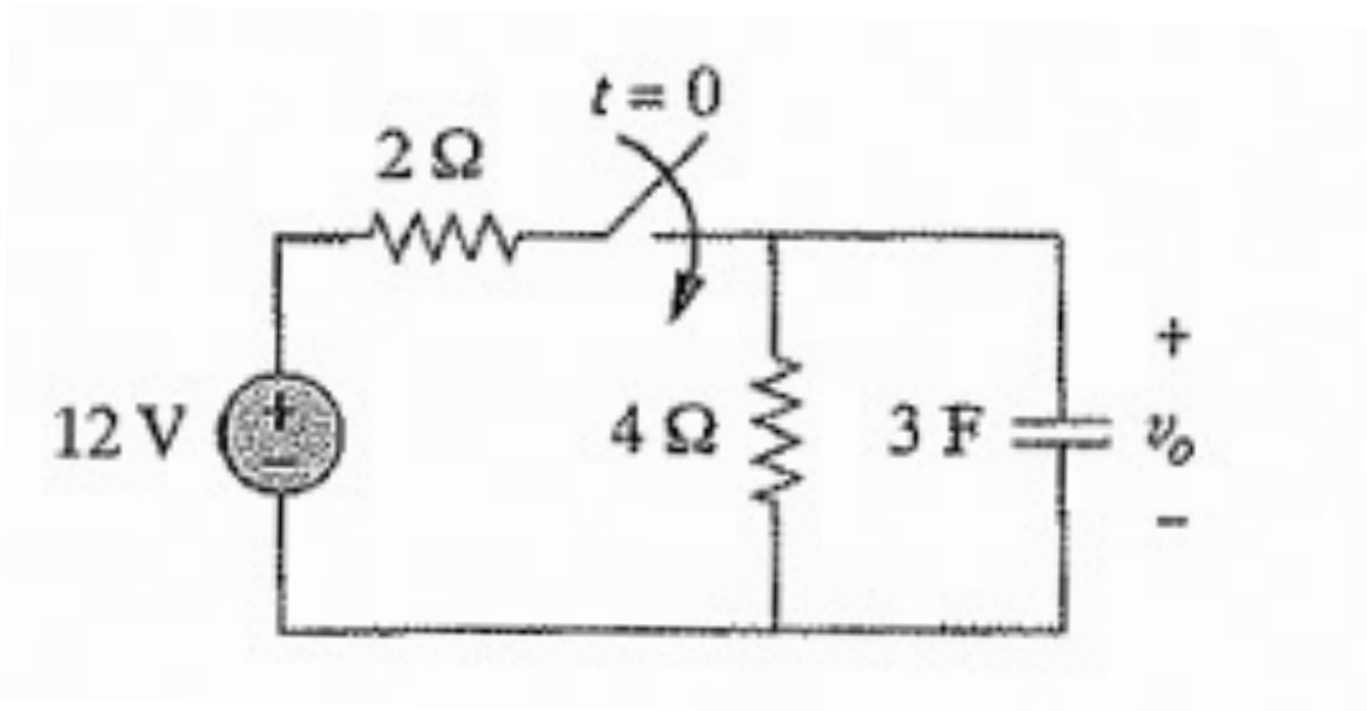

General Result – 1st Order

- Inductor current or capacitor voltage, $x(t)$ for $t > 0$

$$x(t) = (\boldsymbol{x_0} - \boldsymbol{x_\infty})\, e^{-t/\tau} + \boldsymbol{x_\infty}$$

  – Final and initial values, $\boldsymbol{x_\infty}$ and $\boldsymbol{x_0}$:
    - From a DC analysis based on “open” or “short” models for C and L
    - Initial value exploits the continuity of capacitor voltages and inductor currents at $t = 0$

$$x(t) = (x_0 - x_\infty)\, e^{-t/\tau} + x_\infty$$

– Time constant τ (= L/R or RC)

– Why this form?

$$e^{-t/\tau} = \begin{cases} 1 & t = 0 \\ 0.369 & t = \tau \\ 0.002 & t = 4\tau \end{cases}$$

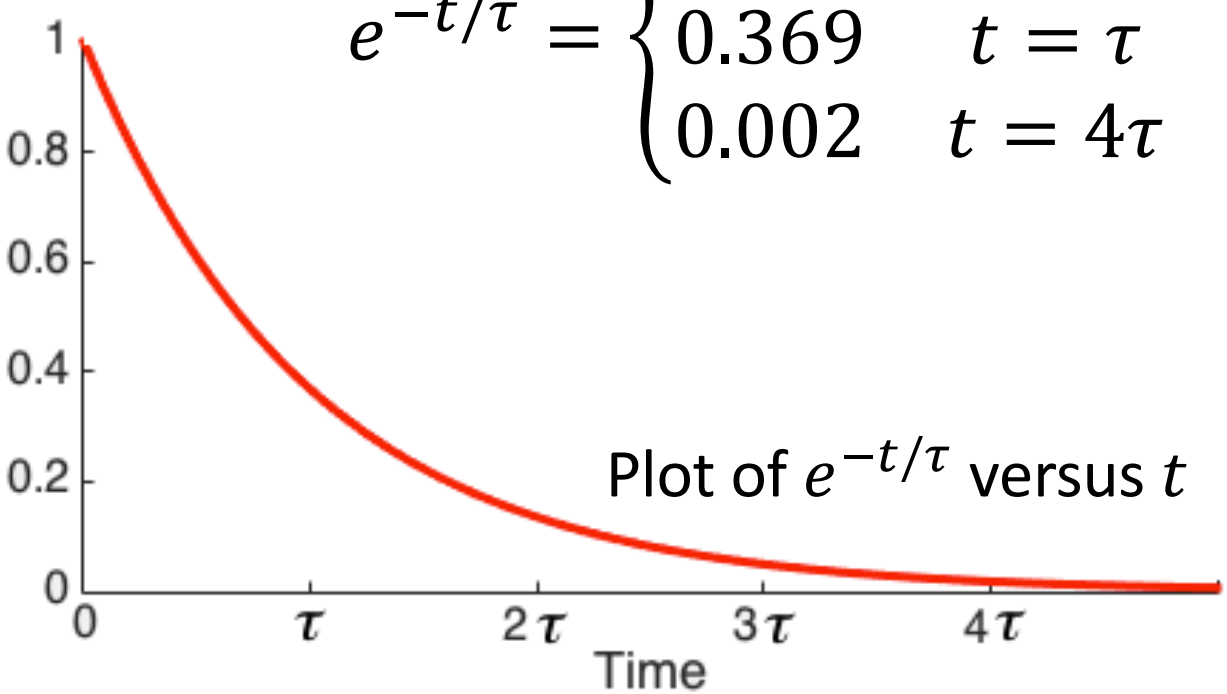

Plot of $e^{-t/\tau}$ versus t

What if the Circuit is more Complex?

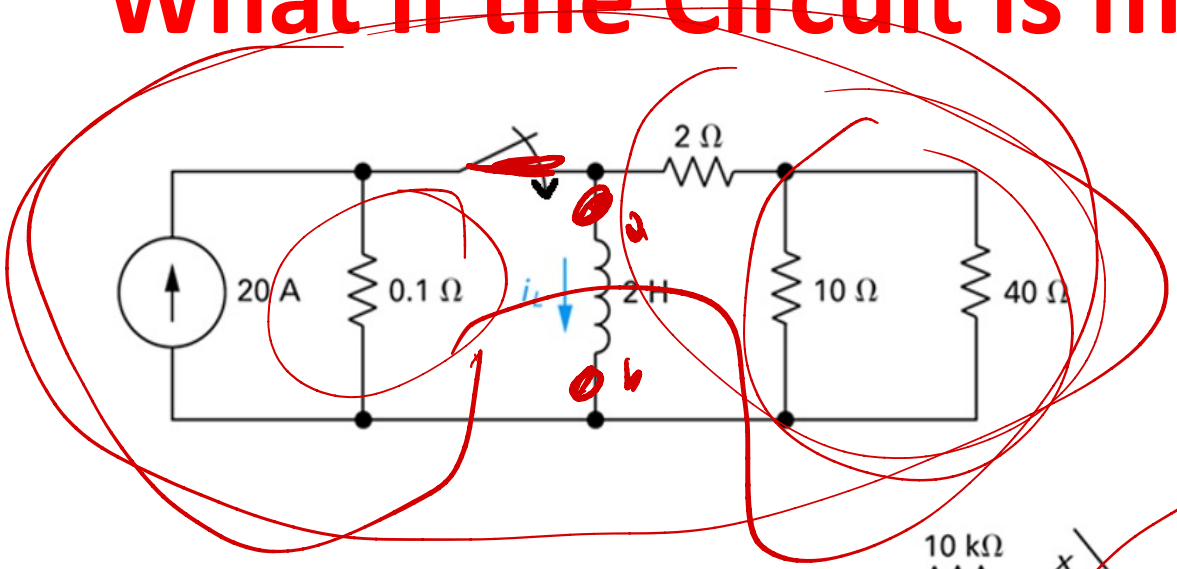

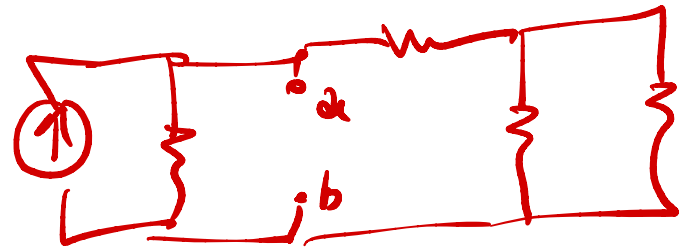

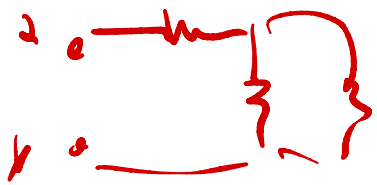

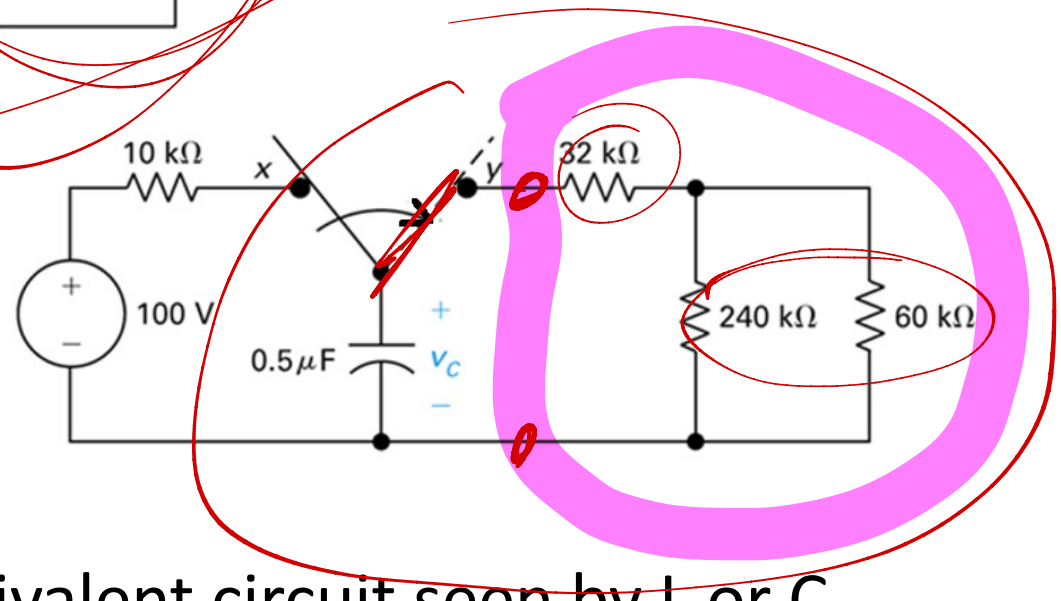

- Use the Thevenin equivalent circuit seen by L or C
  - Time constant $\tau = L/R_{Th}$ or $R_{Th}C$

Worked example

– find $i(t)$

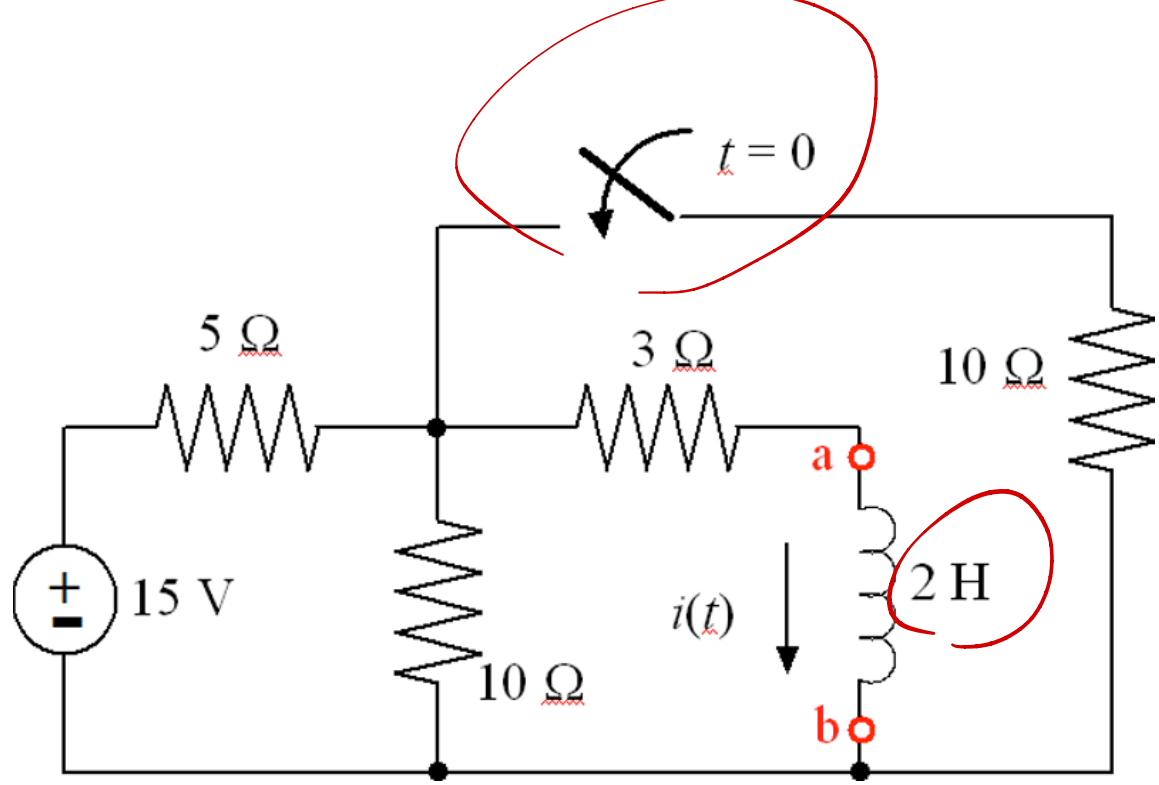

$$i(t) = (i_0 - i_\infty)\, e^{-\,t/\tau} + i_\infty$$

- Need: τ, i_∞, and i_0

Step 1 – time constant $\tau = \dfrac{L}{R_{Th}}$

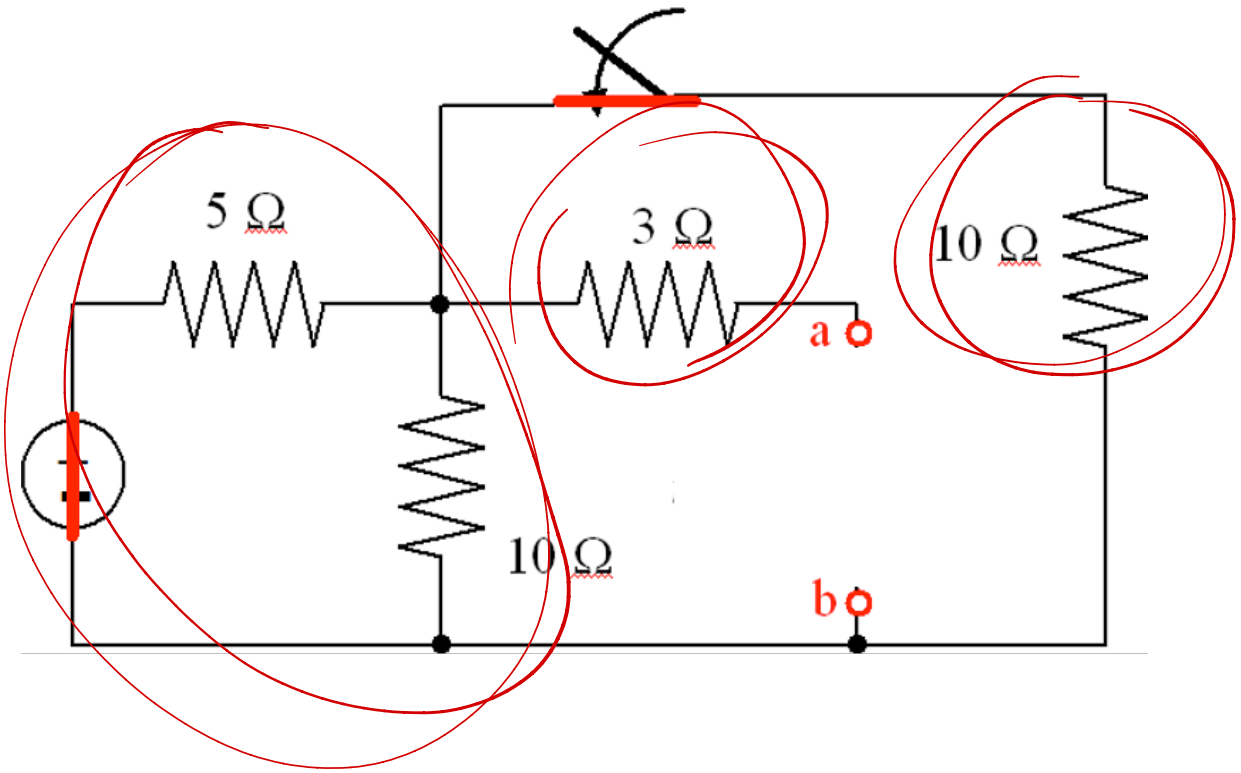

$$R_{Th} = 3 + 5||10||10$$
$$= 3 + 5||5$$
$$= 5.5\ \Omega$$

$$\tau = \frac{2}{5.5} = \frac{1}{2.75}\ \text{sec}$$

Step 2 – final value i_∞; as $t \to \infty$

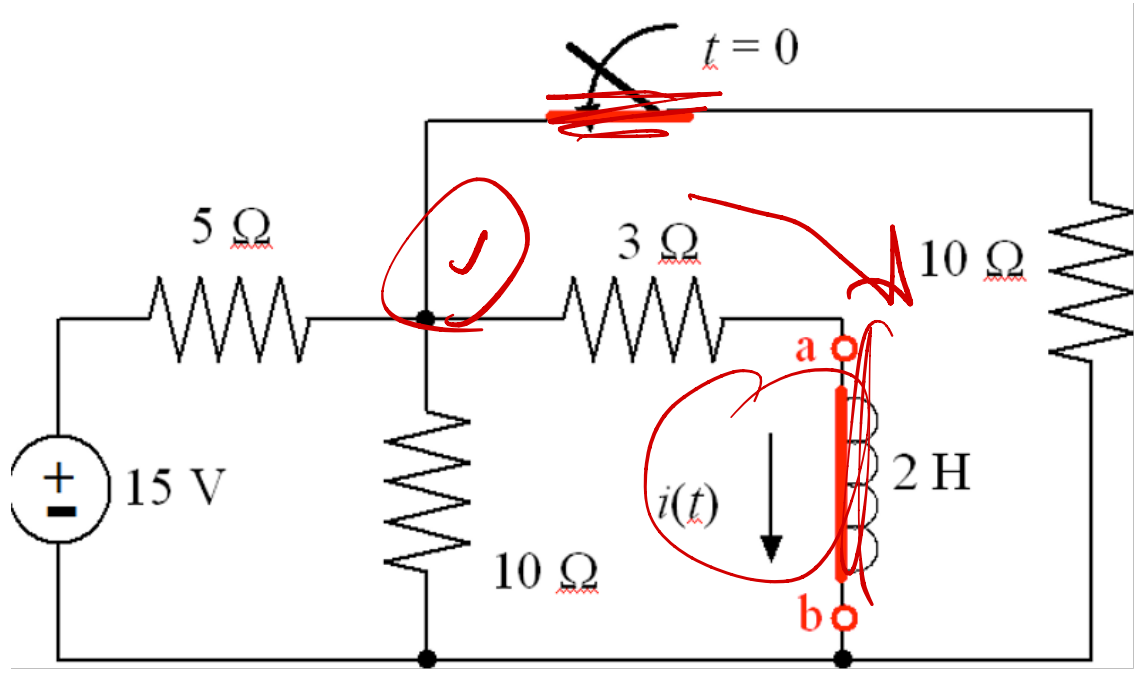

$$\frac{v-15}{5}+\frac{v}{10}+\frac{v}{3}+\frac{v}{10}=0 \quad \Longrightarrow \quad v=\frac{45}{11}$$

$$i_\infty = \frac{v}{3} = \frac{15}{11} = 1.36 \text{ amps}$$

Step 3 – initial value i_0

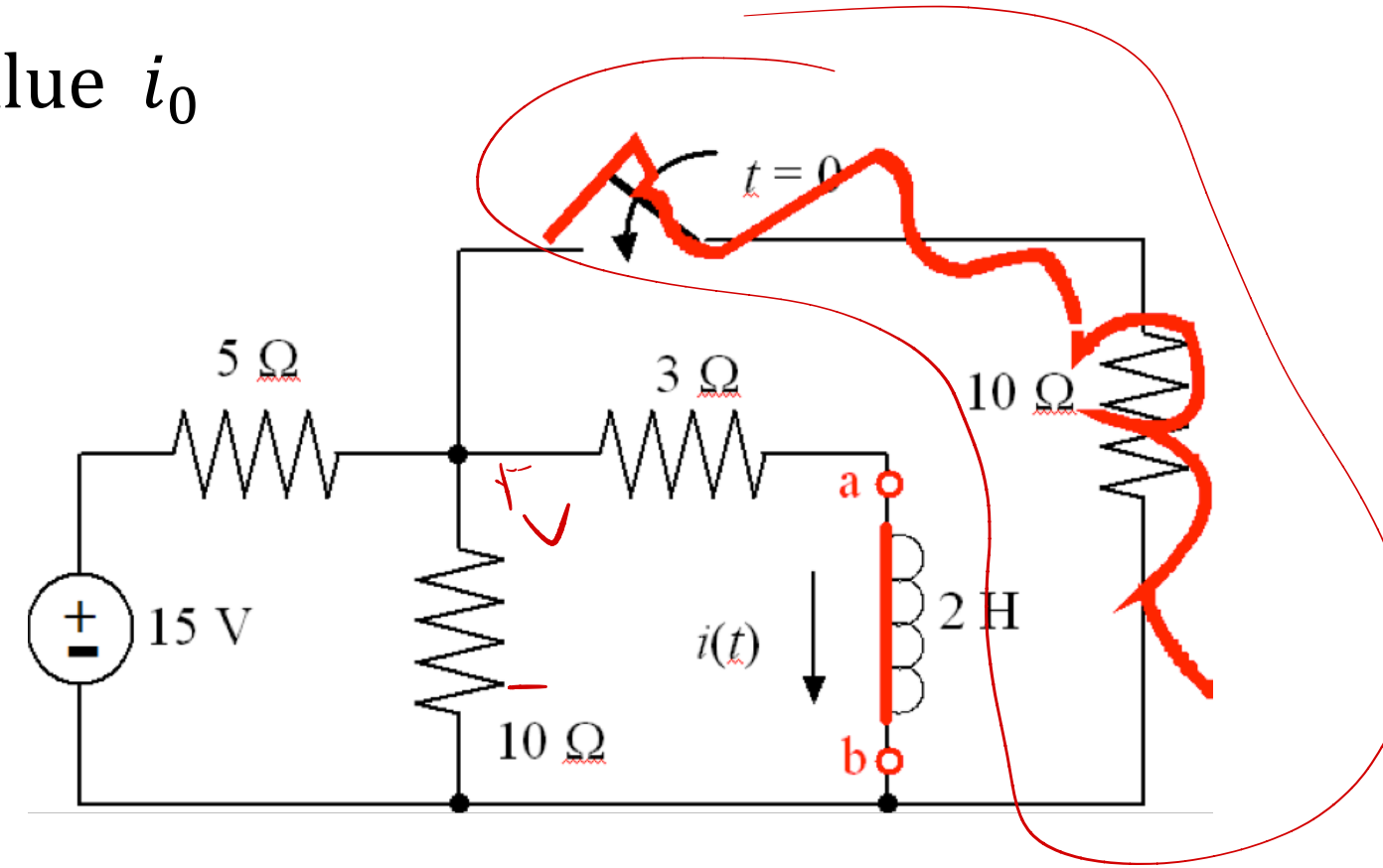

$$\frac{v-15}{5}+\frac{v}{10}+\frac{v}{3}=0 \quad \Longrightarrow \quad v=\frac{90}{19}$$

$$i_0 = \frac{v}{3} = \frac{30}{19} = 1.58 \text{ amps}$$

Combining

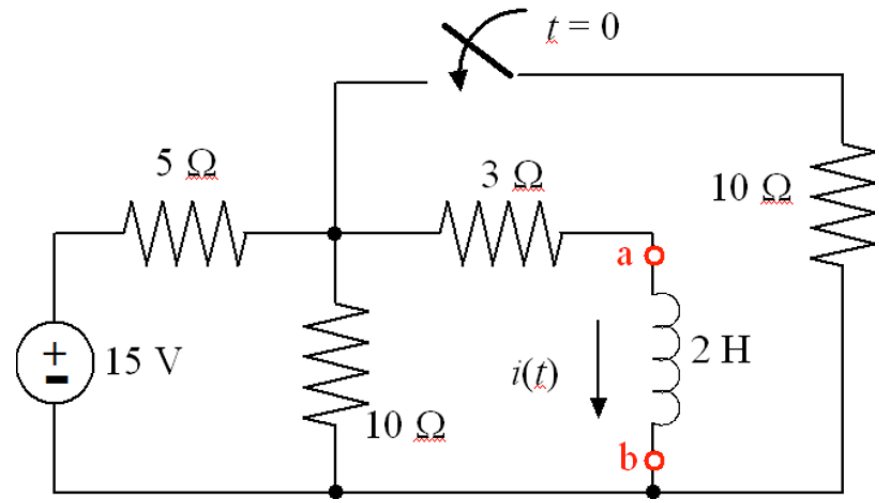

$$i(t) = (i_0 - i_\infty)\, e^{-\,2.75\,t} + i_\infty$$

$$= 0.22\ \ e^{-\,2.75\,t} + 1.36\ \ \text{amps}$$

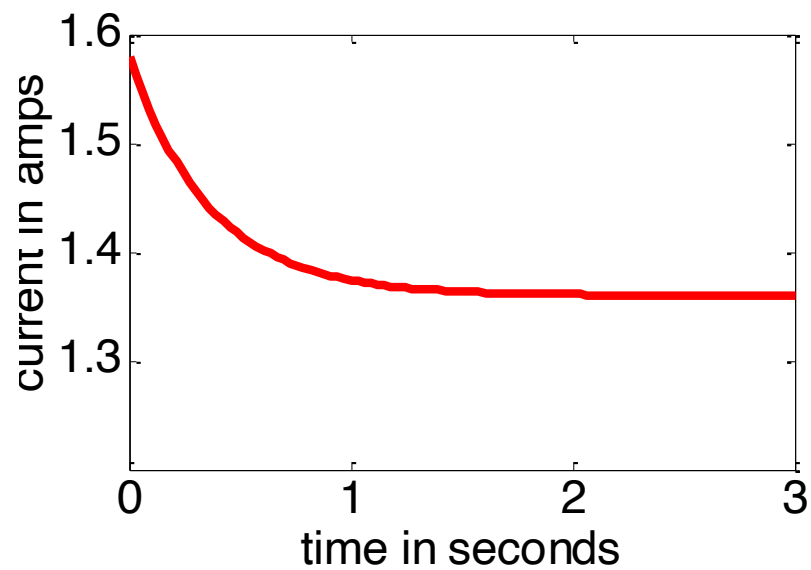

Practice problem: find the inductor current

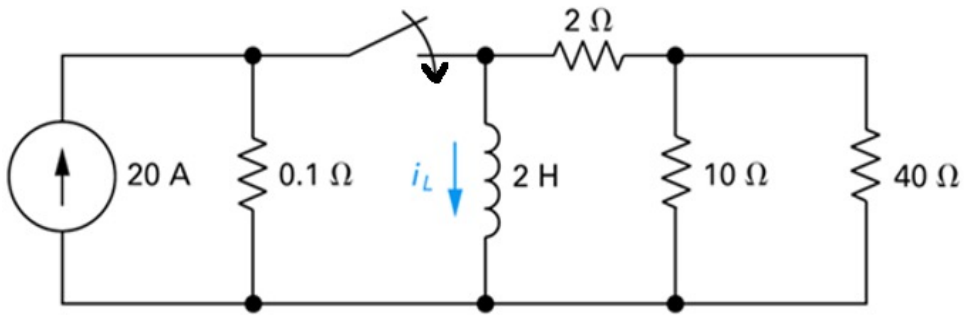

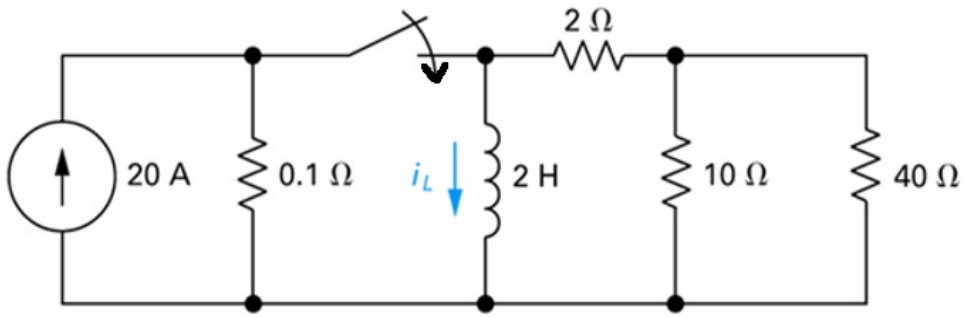

$$i(0^+) = 0\ A$$
$$i(\infty) = 20\ A$$
$$R_{Th} = 0.0990\ \Omega$$

Practice problem: find the capacitor voltage

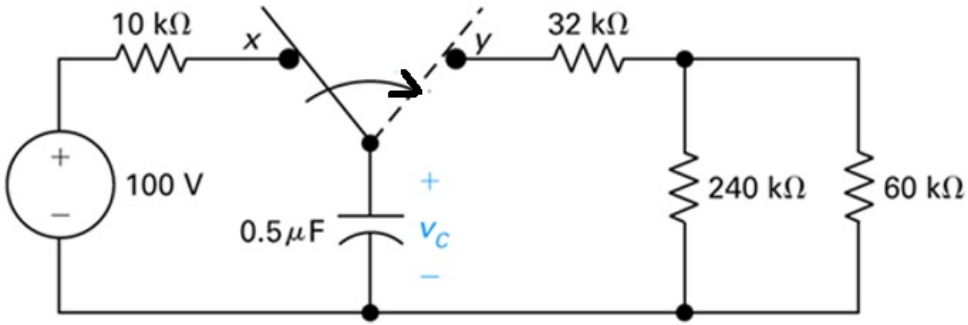

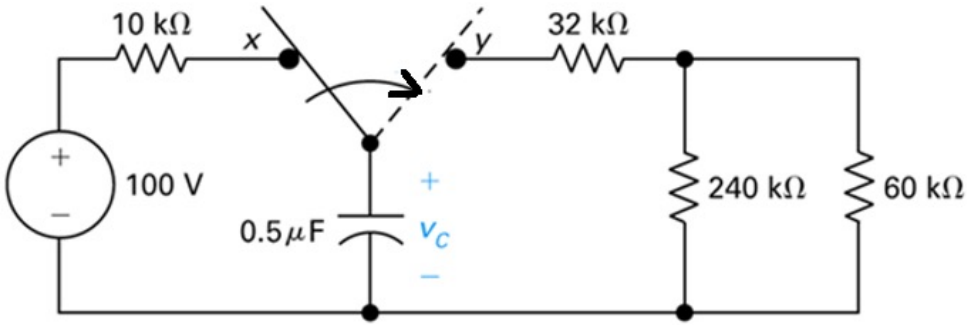

$$v(0^+) = 100\ V$$
$$v(\infty) = 0\ V$$
$$R_{Th} = 80\ k\Omega$$