$$A\cos(\omega t+\phi) + jA\sin(\omega t+\phi)$$

$$= A\left(\cos(\omega t+\phi) + j\sin(\omega t+\phi)\right)$$

Lecture 17
Phasors – 3 of 9

$$Be^{j\theta}$$

$$\rightarrow B\cos(\omega t+\theta)$$

how phasors help

$$= Ae^{j(\omega t+\phi)} = Ae^{j\phi}\cdot e^{j\omega t}$$

Reconsider our Example

- Use a phasor model for the source (and again, just **watch**)

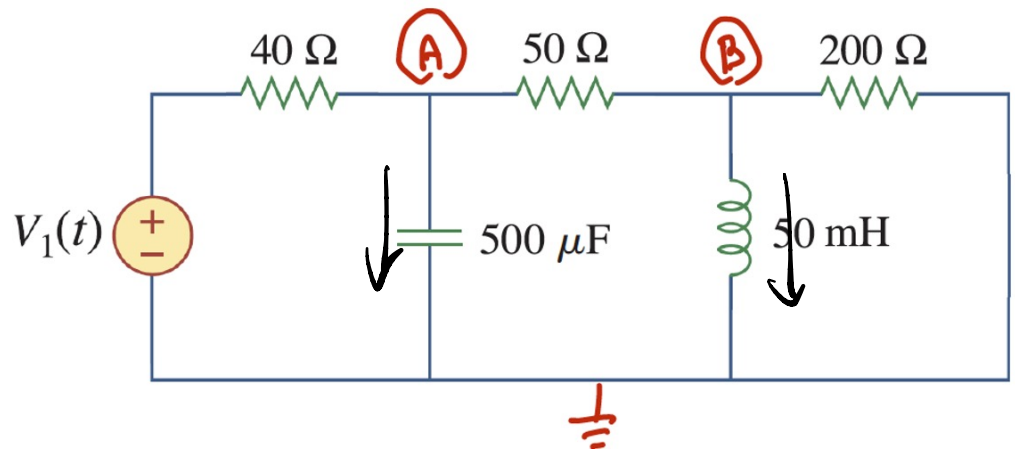

$$V_1(t) = \mathbf{V}e^{j\omega t}$$

$$\frac{A(t) - V_1(t)}{40} + i_C(t) + \frac{A(t) - B(t)}{50} = 0$$

$$\frac{B(t)}{200} + i_L(t) + \frac{B(t) - A(t)}{50} = 0$$

- If our forcing function is

$$V_1(t) = \mathbf{V}e^{j\omega t}$$

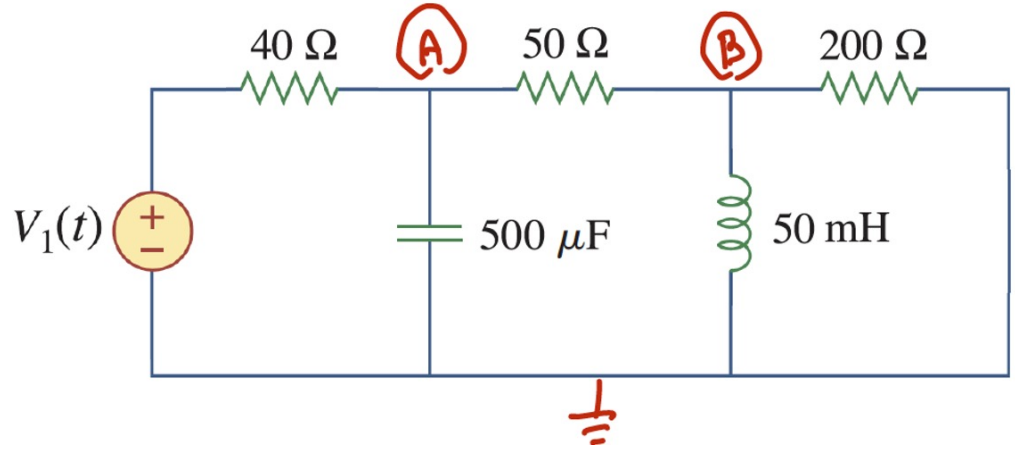

- Then the particular (steady-state) solution is also a complex exponential

Table 2.1 Method of Undetermined Coefficients

Term in $r(x)$	Choice for $y_p(x)$
$ke^{\gamma x}$	$Ce^{\gamma x}$
kx^n $(n = 0, 1, \cdots)$	$K_n x^n + K_{n-1}x^{n-1} + \cdots + K_1 x + K_0$
$k \cos \omega x$ $k \sin \omega x$	$K \cos \omega x + M \sin \omega x$ $= \boldsymbol{K\cos(\omega t + \theta)}$

$A e^{j(\omega t + \phi)}$ $\qquad$ $10 \cos(500 t)$

- Phasor notation:

$$A(t) \Longrightarrow \mathbf{A}e^{j500t} \qquad B(t) \Longrightarrow \mathbf{B}e^{j500t} \qquad V_1(t) \Longrightarrow 10e^{j500t}$$

$$\mathbf{A} = Ae^{\phi} \qquad \mathbf{B} = Be^{j\theta} \qquad \mathbf{V_1} = 10$$

- Consider the capacitor and inductor currents with this general model; if the voltage is $v(t) = \mathbf{V}e^{j\omega t}$ then

$$i_C(t) = C\frac{dv}{dt} = C\frac{d}{dt}\left(\mathbf{V}e^{j\omega t}\right) = j\omega C\,\mathbf{V}e^{j\omega t} = j\frac{1}{4}\,\mathbf{V}e^{j\omega t}$$

$$i_L(t) = \frac{1}{L}\int^{t} v(u)\,du = \frac{1}{L}\int^{t} \mathbf{V}e^{j\omega u}du = \frac{\mathbf{V}e^{j\omega t}}{j\omega L} = \frac{\mathbf{V}e^{j\omega t}}{j25}$$

- Back to the original node equations

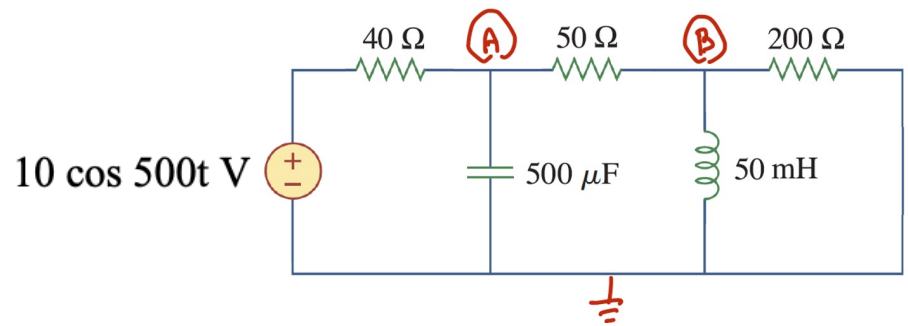

$$\frac{\mathbf{A}e^{j500t} - 10e^{j500t}}{40} + j\frac{1}{4}\,\mathbf{A}e^{j500t} + \frac{\mathbf{A}e^{j500t} - \mathbf{B}e^{j500t}}{50} = 0$$

$$\frac{\mathbf{B}e^{j500t}}{200} + \frac{\mathbf{A}e^{j500t}}{j25} + \frac{\mathbf{B}e^{j500t} - \mathbf{A}e^{j500t}}{50} = 0$$

- Can cancel the common e^{j500t} term

- Result is a set of simultaneous equations with complex coefficients

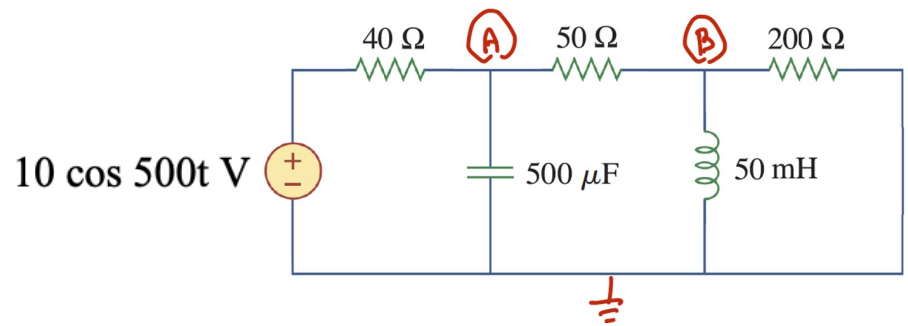

$$\frac{\mathbf{A}-10}{40}+j\frac{\mathbf{A}}{4}+\frac{\mathbf{A}-\mathbf{B}}{50}=0$$

$$\frac{\mathbf{B}}{200}+\frac{\mathbf{A}}{j25}+\frac{\mathbf{B}-\mathbf{A}}{50}=0$$

- Solve using various methods (Cramer, matrix inverse, etc)

- Solving

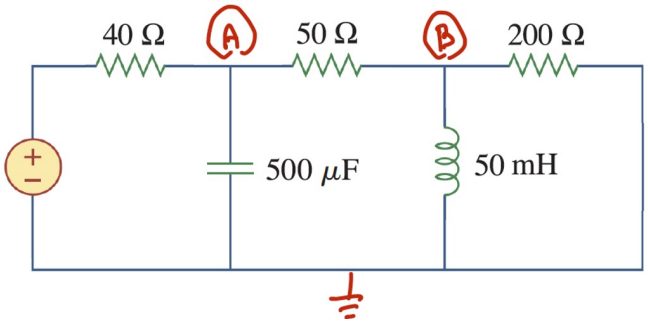

$$B = \frac{\begin{vmatrix} \frac{1}{40} + \frac{1}{50} + j\frac{1}{4} & \frac{1}{4} \\ -\frac{1}{50} & 0 \end{vmatrix}}{\begin{vmatrix} \frac{1}{40} + \frac{1}{50} + j\frac{1}{4} & -\frac{1}{50} \\ -\frac{1}{50} & \frac{1}{200} + \frac{1}{50} + \frac{1}{j25} \end{vmatrix}}$$

$$= 0.398 - j0.165 = 0.431\angle -22.5°$$

So $B(t) = 431\cos(500t - 22.5°)\ mV$

Same as last time !!

So How to Use Phasors?

- Extend sinusoidal voltages/currents to phasors (complex)

$$V_s \cos(\omega t + \phi) \Rightarrow \mathbf{V} = V_s e^{j\phi}$$
$$I_s \cos(\omega t + \phi) \Rightarrow \mathbf{I} = I_s e^{j\phi}$$

- Convert components (R,L,C) to <u>impedances</u>

$$Z = \begin{cases} R & \text{resistor} \\ j\omega L & \text{inductor} \\ \dfrac{1}{j\omega C} = -j\dfrac{1}{\omega C} & \text{capacitor} \end{cases}$$

- Solve the problem using Ohm's Law, KVL/KCL, …

- Convert back

$$B\angle\theta \Rightarrow B\cos(\omega t + \theta)$$

Example:

- Convert problem
- Combine in series
- Apply Ohm's Law
- Convert back

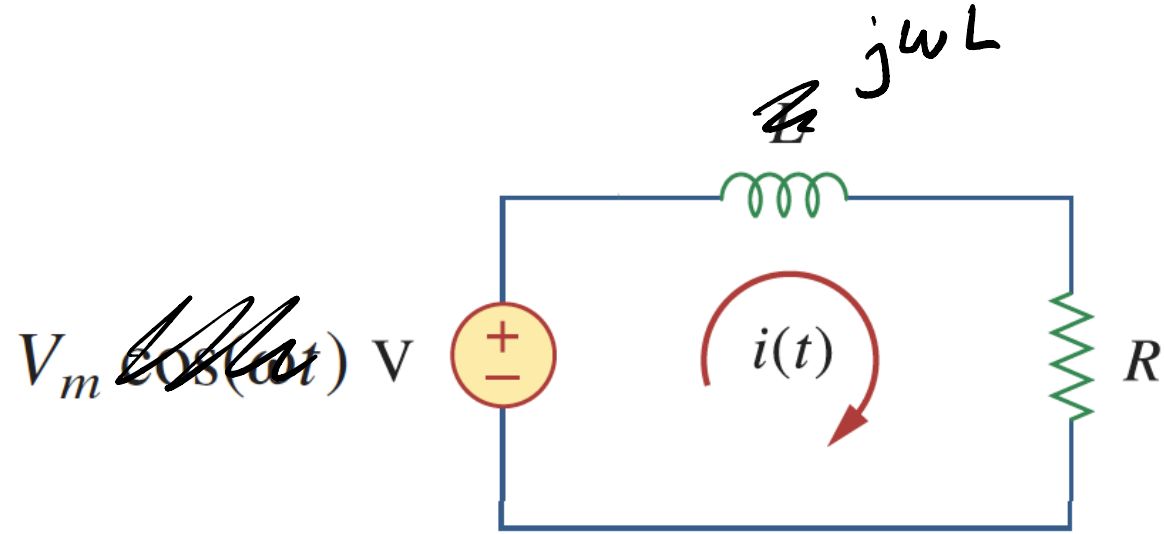

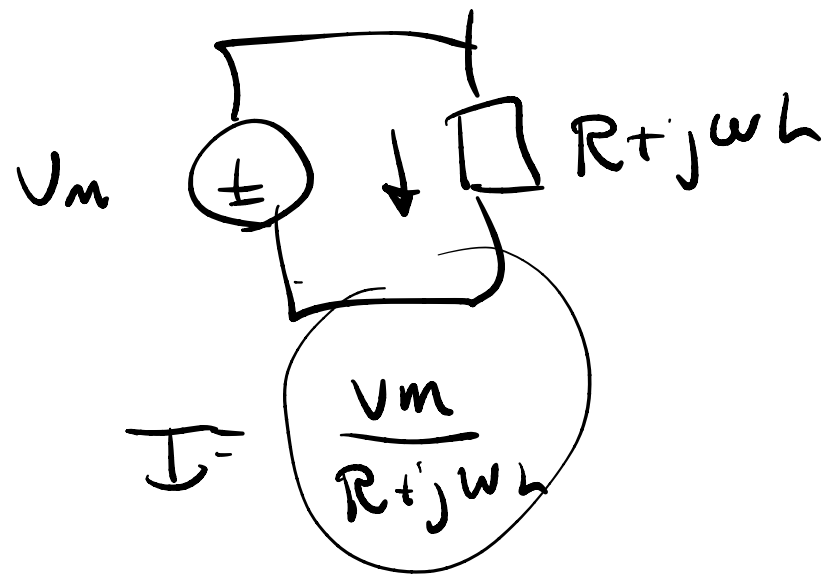

$$i(t) = \frac{V_m}{\sqrt{R^2 + \omega^2 L^2}} \cos\left(\omega t - \tan^{-1}\frac{\omega L}{R}\right)$$

Example (again):

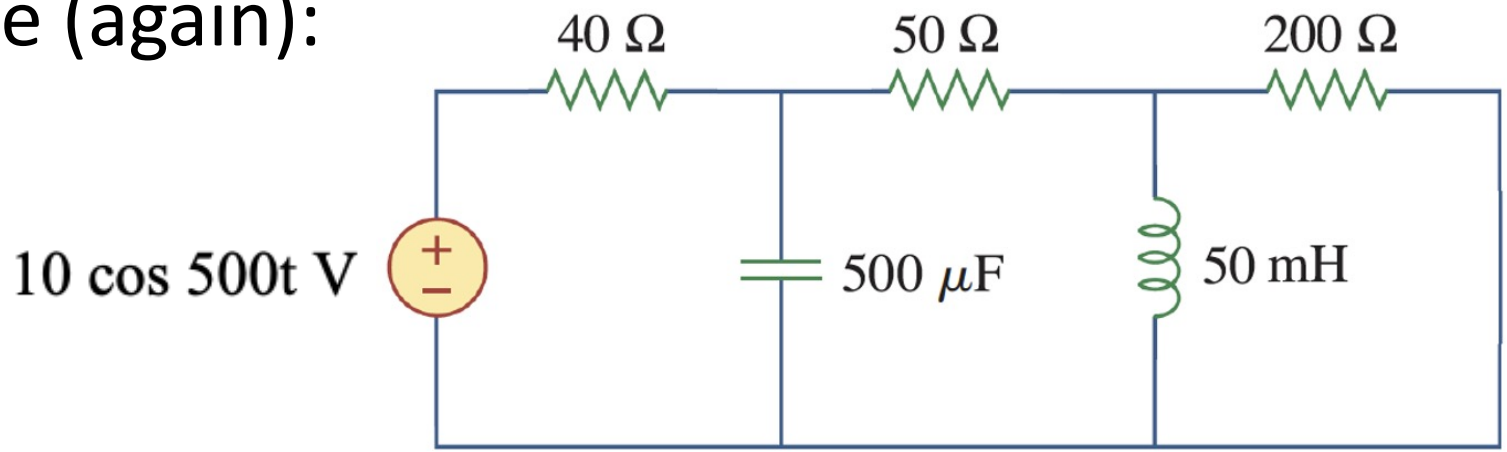

Example: find the current $i(t)$ (answer on next slides)

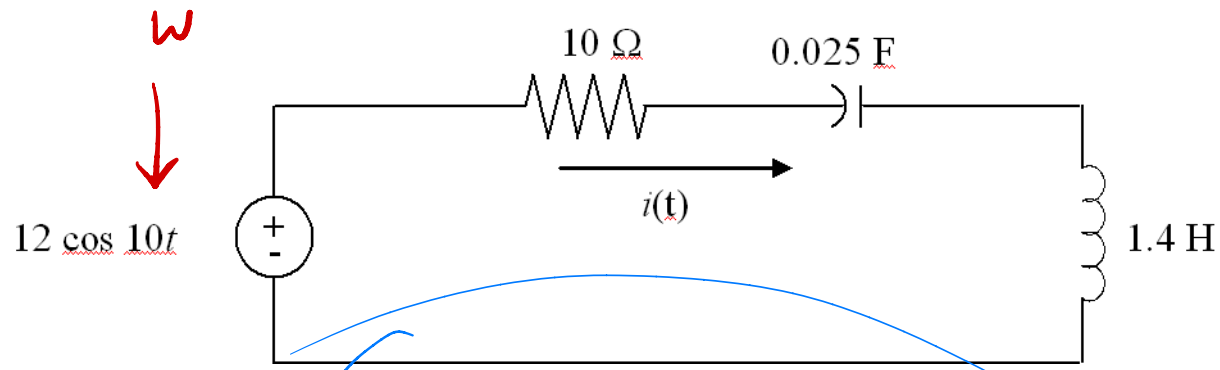

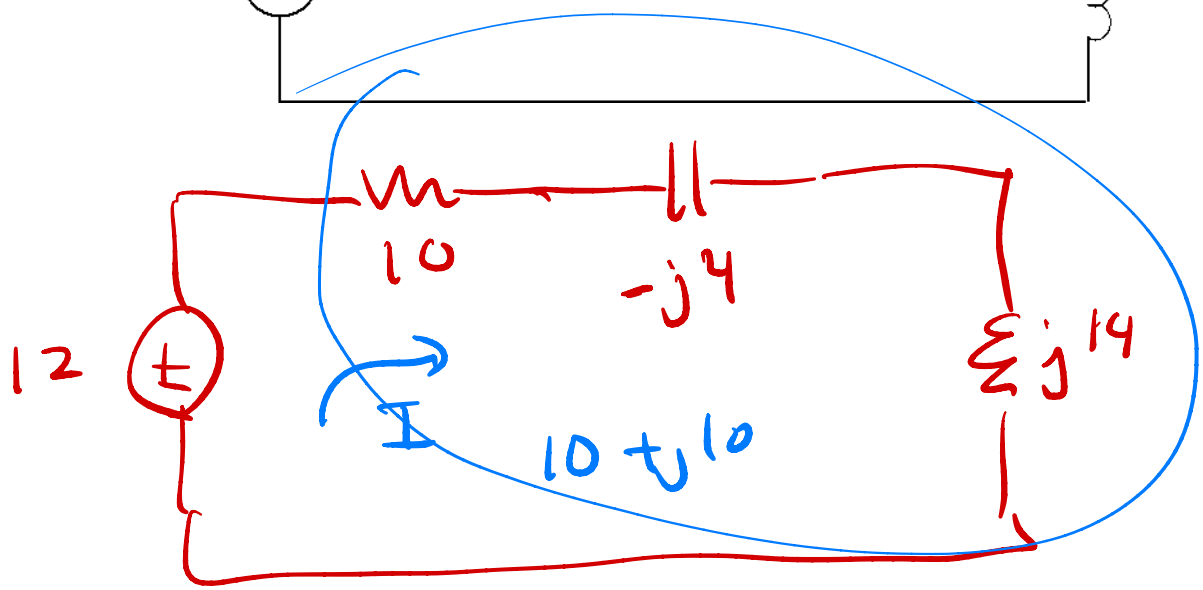

$$\frac{1}{j\omega C} = -j\frac{1}{10 \cdot .025} = -j4$$

$$j\omega L = j\,10 \cdot 1.4 = j14$$

$$I = \frac{12}{10+j10} = \frac{12}{10\sqrt{2}\angle 45^\circ} = \frac{12}{10\sqrt{2}}\angle -45^\circ$$

$$\boxed{i(t) = \frac{6}{5\sqrt{2}}\cos(10t - 45^\circ)\ \text{A}}$$

- **Step 1:** Convert to phasors and impedances

$$12\cos 10t \;\rightarrow 12$$

$$1.4\ H \rightarrow j\omega L = j\ (10)(1.4) = j14$$

$$0.025\ F \rightarrow -j\frac{1}{\omega C} = -j\frac{1}{(10)(0.025)} = -j4$$

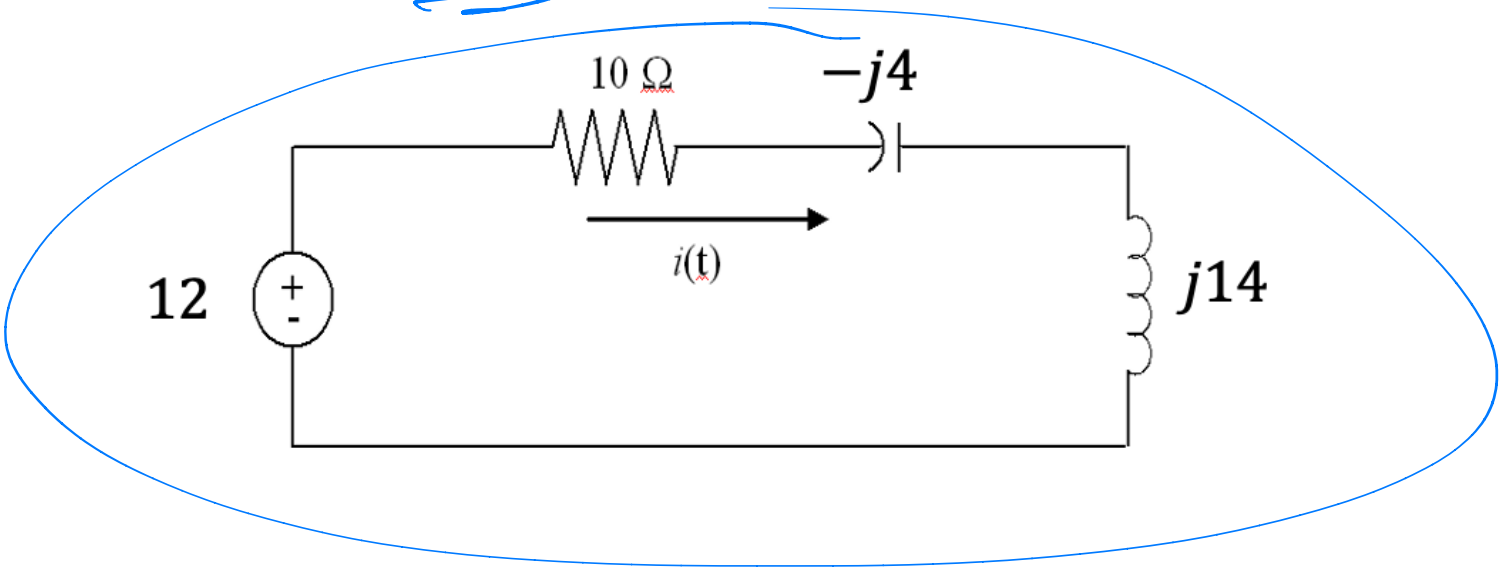

- **Step 2:** Solve
  - Find the current by series impedance

$$I = \frac{12}{10-j4+j14} = \frac{12}{10+j10} = \frac{12}{10\sqrt{2}\,\angle 45°} = 0.848\,\angle -45°$$

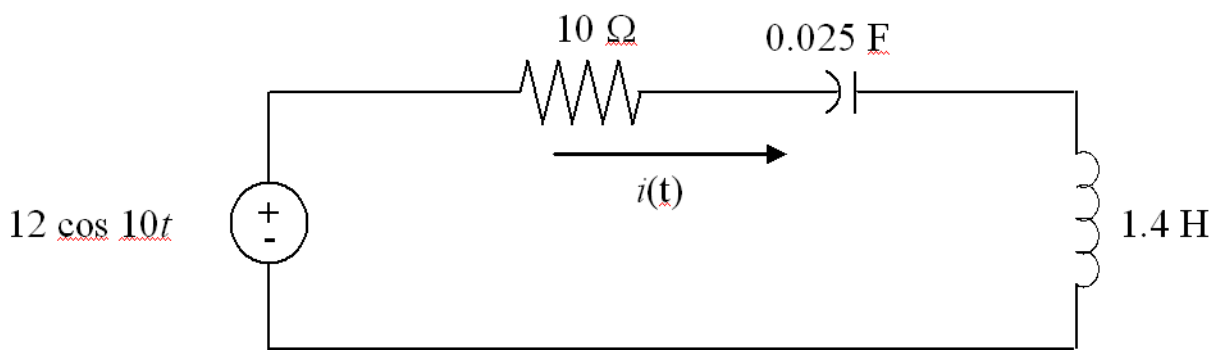

- **Step 3:** Convert back to a time function

$$i(t) = 0.848\ \cos(10t - 45°)\ \text{A}$$

Example: find V(t) by voltage division

$v_g(t) = 75\cos 20{,}000t$ V

$j\omega L = j \cdot 20000 \cdot 2$

$\frac{1}{j\omega C} = -j\frac{1}{20000}\frac{10^9}{3.125}$

$62500 = -j16k$

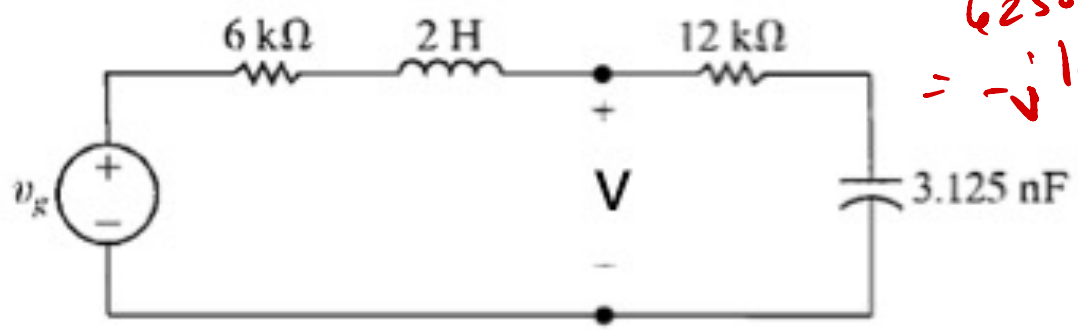

1- Convert

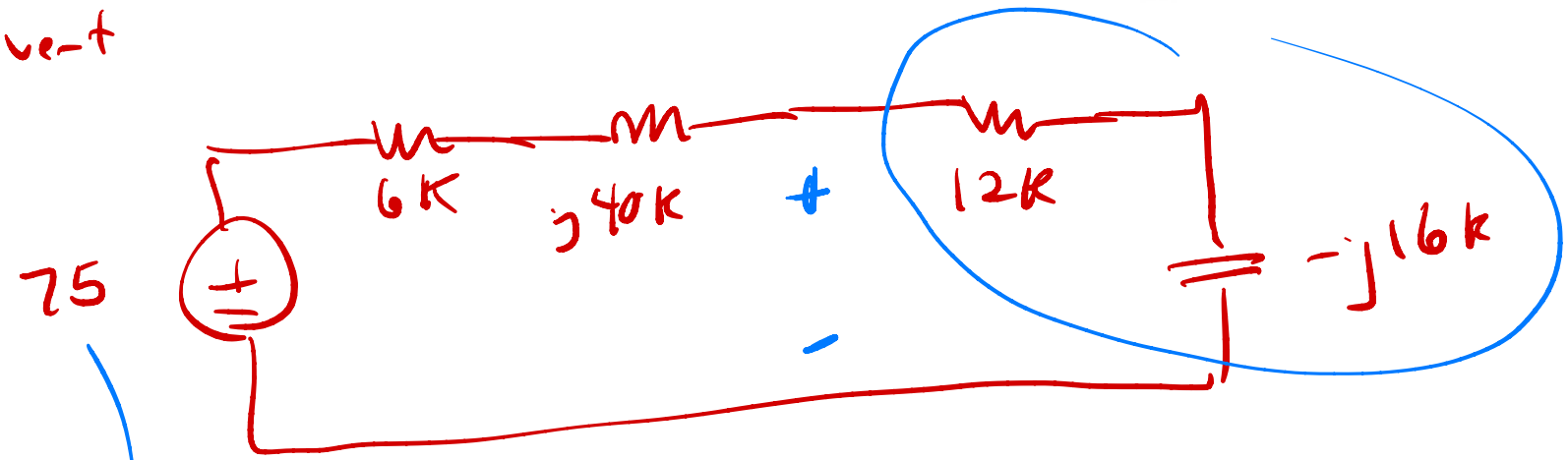

$$V_o = 75\frac{(12-j16)\cdot 10^3}{(18+j24)10^3} = 75\frac{12-j16}{18+j24}$$

$$50\cos(20{,}000t - 106°)\ V$$

$$75\,\frac{12 - j16}{18 + j24} = \frac{4(3 - j4)}{6(3 + j4)}\,75$$

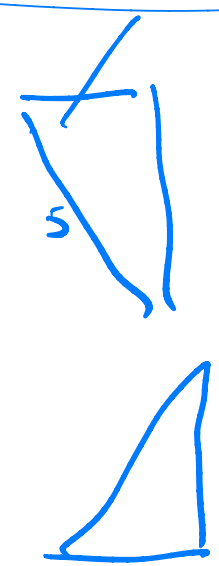

$$= \frac{4 \cdot \cancel{5}\angle -53°}{6 \cdot \cancel{5}\angle 53°}\,75$$

$$= \frac{2}{3}\angle -106°\ 75$$

$$= 50\angle -106°$$

Example: find v

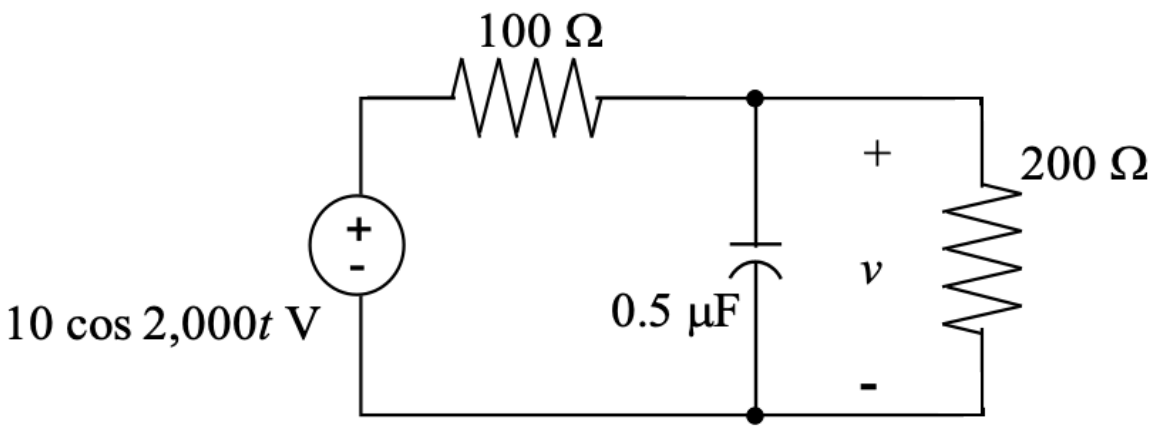

1- convert

$$-j\frac{1}{\omega C} = -j\frac{10^6}{2000\,\frac{1}{2}}$$

2- parallel

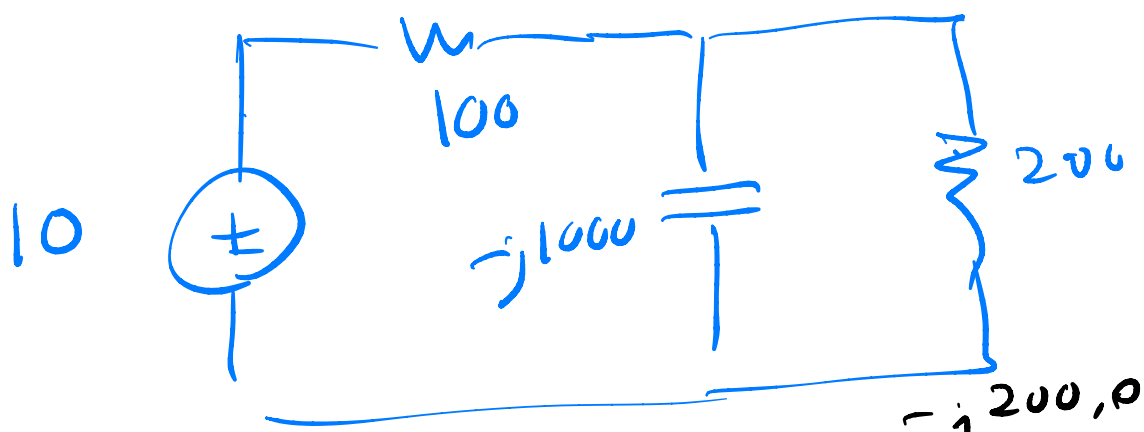

$$\frac{-j200{,}000}{200-j1000}$$

3- volt. div

$$v = 10\cdot\frac{\frac{-j200{,}000}{200-j1000}}{-j\frac{200{,}000}{200-j100}+100}$$

$6.65 \cos(2000t - 3.81°)\ V$

$$V = 10 \cdot \frac{\dfrac{-j\,200{,}000}{200 - j1000}}{-\dfrac{j\,200{,}000}{200 - j100} + 100}$$

$$= \frac{-j\,2 \cdot 10^6}{-j\,2 \cdot 10^5 + 100\,(200 - j1000)}$$

$$= \frac{2 \cdot 10^6 \angle -90°}{20{,}000 - j\,2 \cdot 10^5 - j\,20{,}000} = \frac{2 \cdot 10^6 \angle -90}{220{,}000 \angle -87}$$

$$20{,}000 - j\,220{,}000$$

Practice problem: find the current if

$v_s(t) = 750 \cos 5000t$

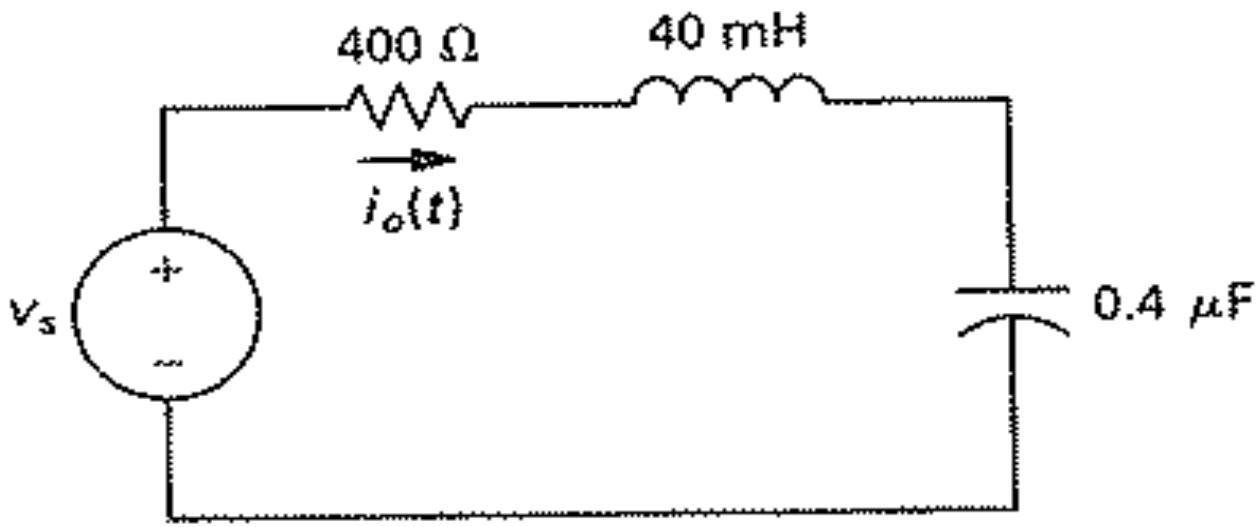

$1.5 \cos(5000t + 36.9°)\ A$

Practice problem: if $v_g(t) = 75 \cos 5000t$ V, find the time expression for v_o

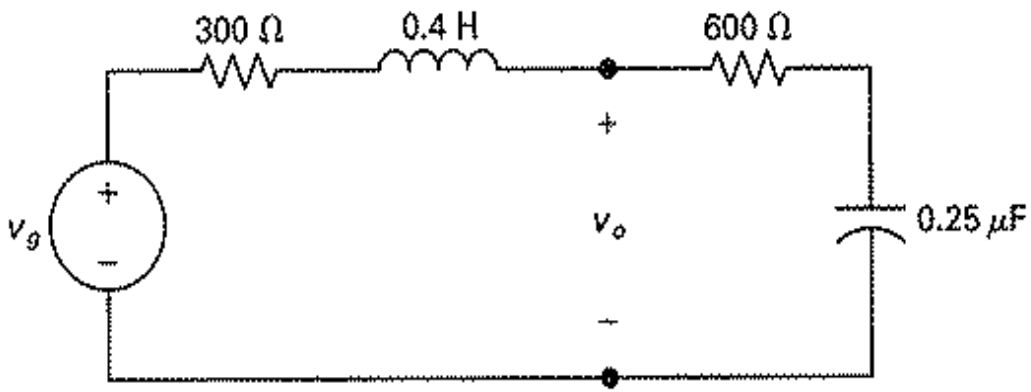

$130 \cos(5000t - 93.4°)$ V

Practice problem: find v

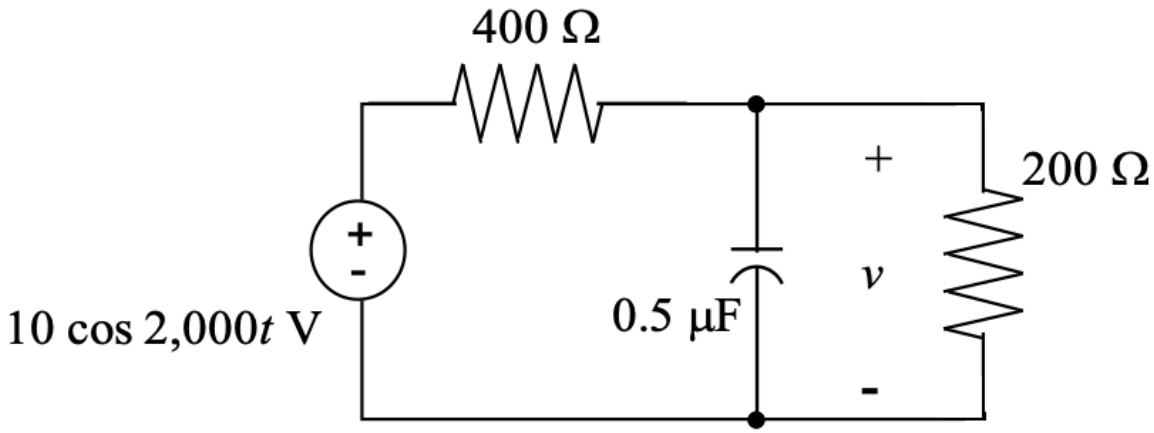

$3.30\ \cos(2000t - 7.60°)\ V$