Lecture 33
1st Order Transients – 4 of 5

other circuit variables

previous: $i(t) = 0.22\, e^{-2.75\, t} + 1.36$

Question – How do we find $v(t)$?

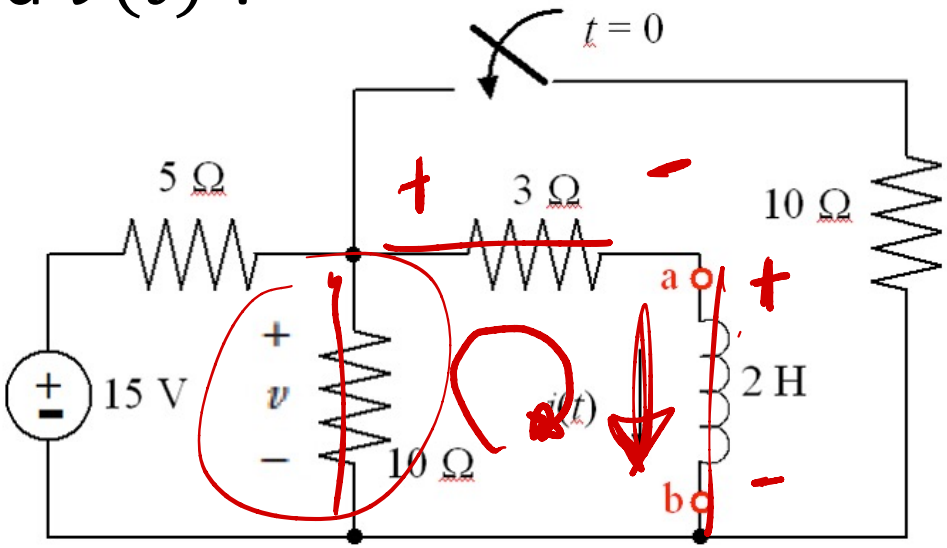

- Method 1:
  Propagate $i(t)$ from earlier class
  KVL:

$$v(t) = 3\, i(t) + 2\,\frac{di(t)}{dt}$$

$$= 3(0.22\, e^{-2.75\, t} + 1.36)$$
$$+2(-2.75)(0.22\, e^{-2.75\, t})$$

$$= -0.55\, e^{-2.75\, t} + 4.09 \quad \text{volts}$$

- Method 2

  Direct solution

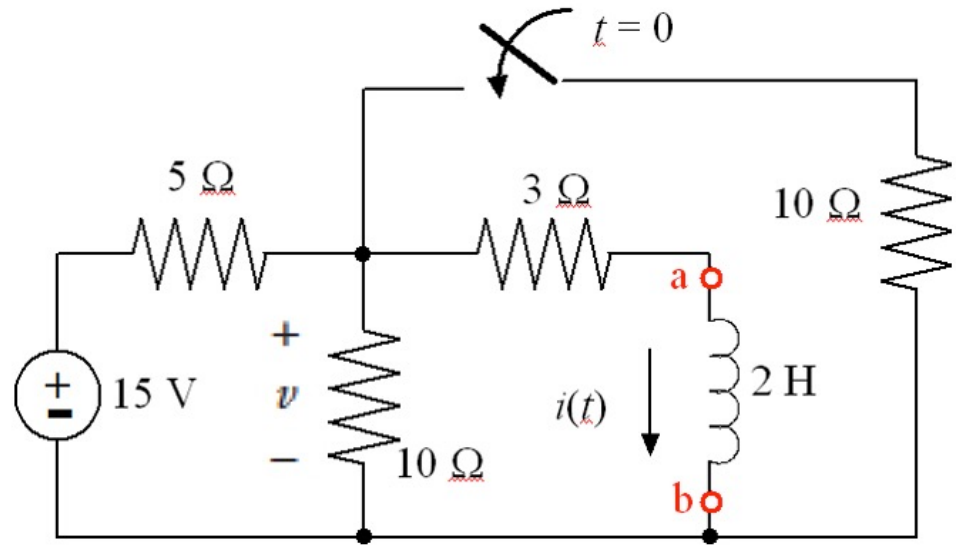

$$v(t) = (v_0 - v_\infty)\, e^{-t/\tau} + v_\infty$$

$$\tau = \frac{1}{2.75}\ \text{sec}$$

Same time constant !!

$$v_\infty = 15\,\frac{10||10||3}{10||10||3 + 5} = 4.09$$

Voltage division (same idea)

- How do we find v_0 ?
  - **Cannot** use voltage before the switch (IC) since it need not be continuous
  - **Can** exploit the fact that

$$i_L(0) = 1.58 \quad \text{amps}$$

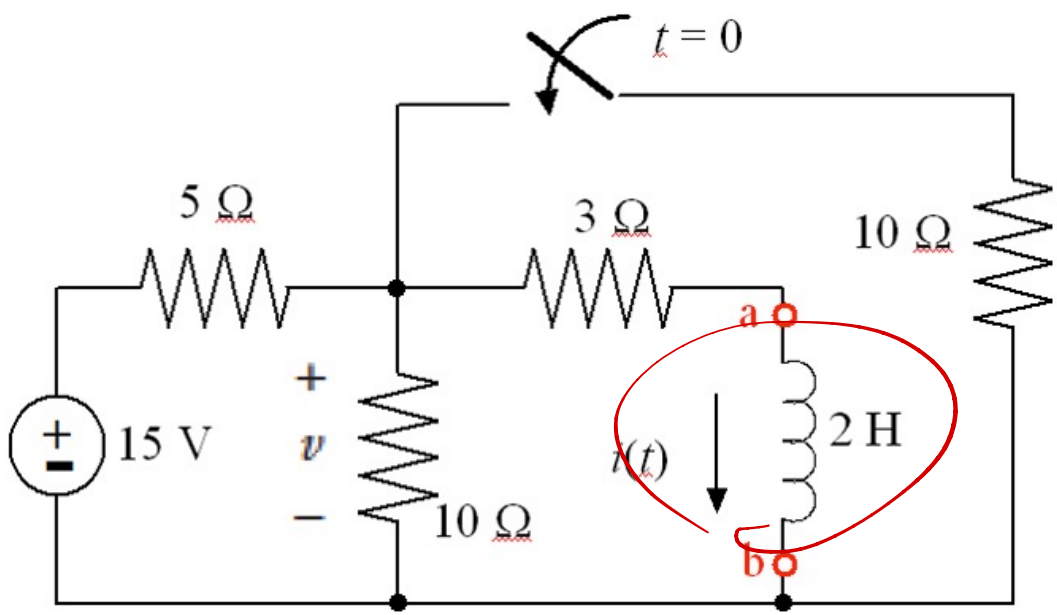

At time $t = 0$:

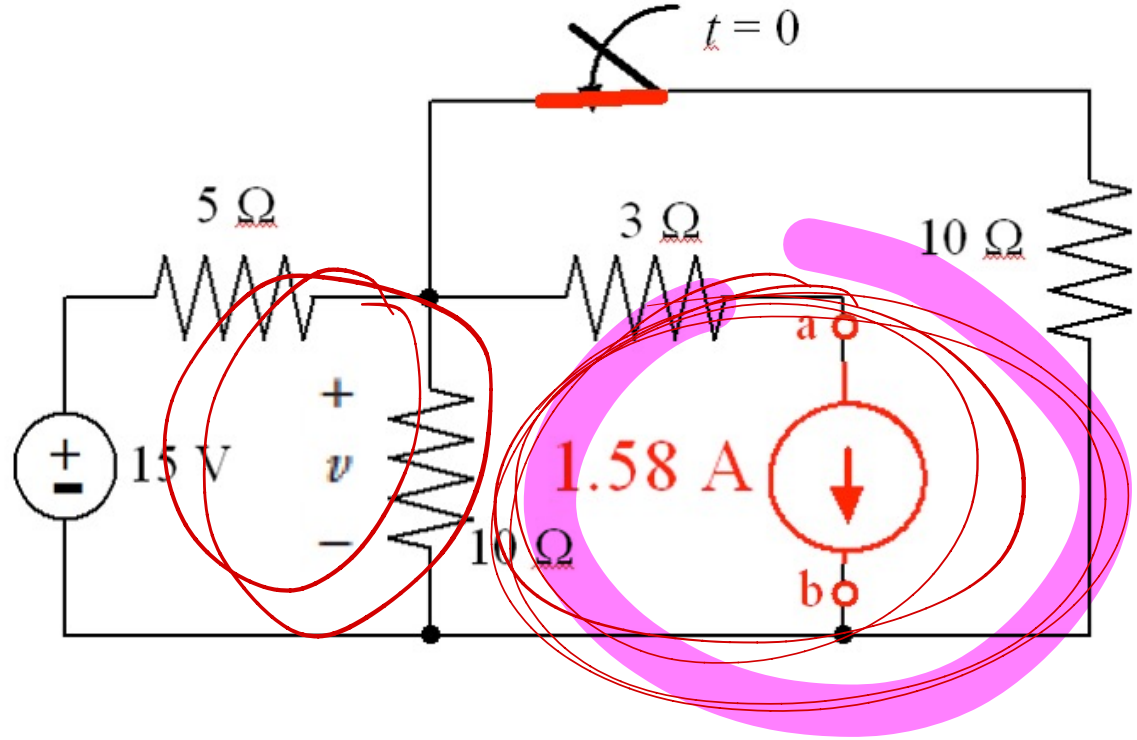

Node analysis:

$$\frac{v_0 - 15}{5} + \frac{v_0}{10} + \frac{v_0}{10} + 1.58 = 0$$

$$v_0 = 3.55 \quad \text{volts}$$

- So

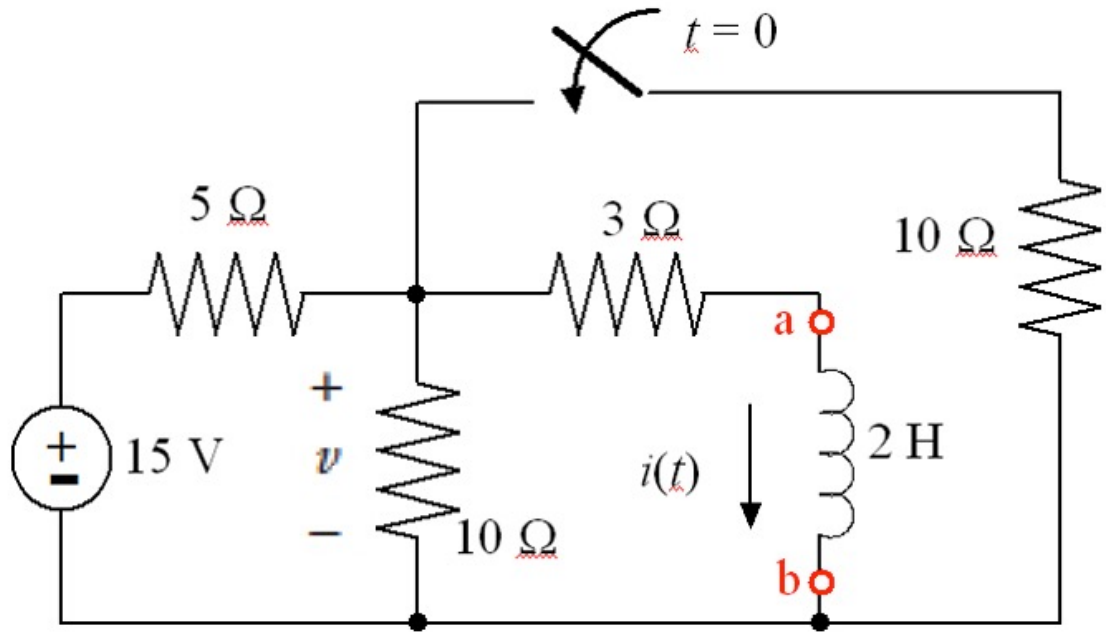

$$
\begin{aligned}
v(t) &= (v_0 - v_\infty)\, e^{-\frac{R}{L}t} + v_\infty \\
&= (3.55 - 4.09)\, e^{-\,2.75\,t} + 4.09 \\
&= -0.55\, e^{-\,2.75\,t} + 4.09 \quad \text{volts}
\end{aligned}
$$

- Also, for $t < 0$, $v(t) = \frac{90}{13} = 4.74$ volts, so we see a "jump" at $t = 0$

Example: find $i(t)$

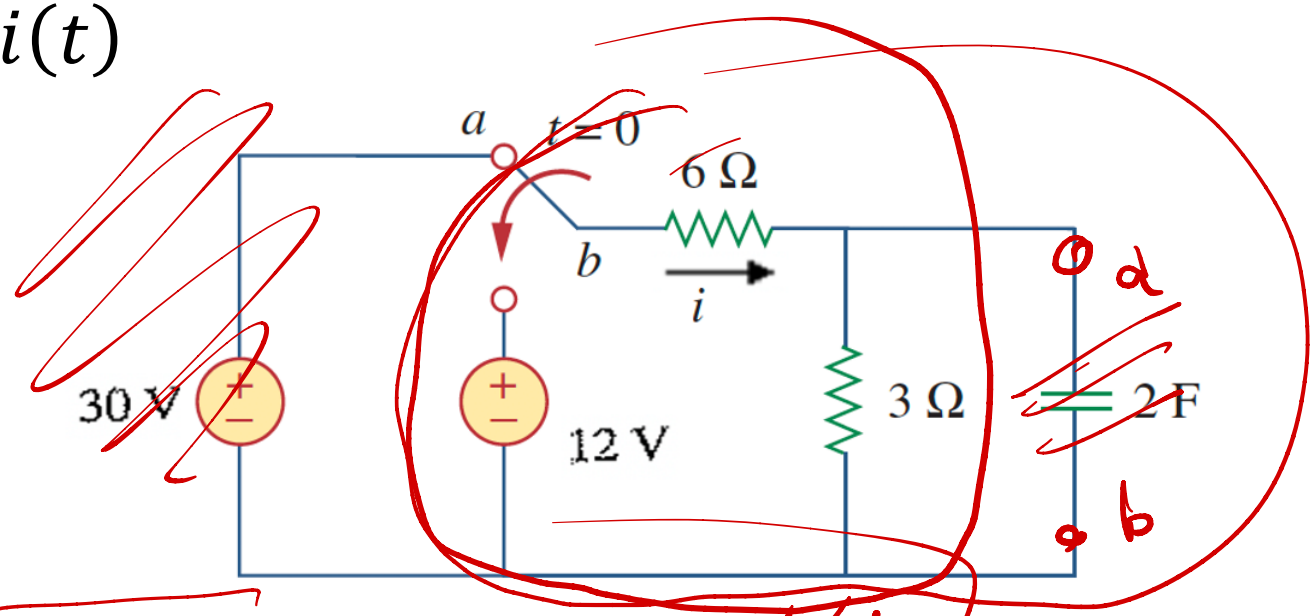

Form: $i(t) = i_\infty + (i_0 - i_\infty)e^{-t/\tau}$

Time constant: $\tau = RC = 4$

$R_{th} = 2$ $C = 2$

Final value: $i_\infty = \frac{12}{9} = \frac{4}{3}$ A

Initial value: use $v_c(0)$

just for $t=0$

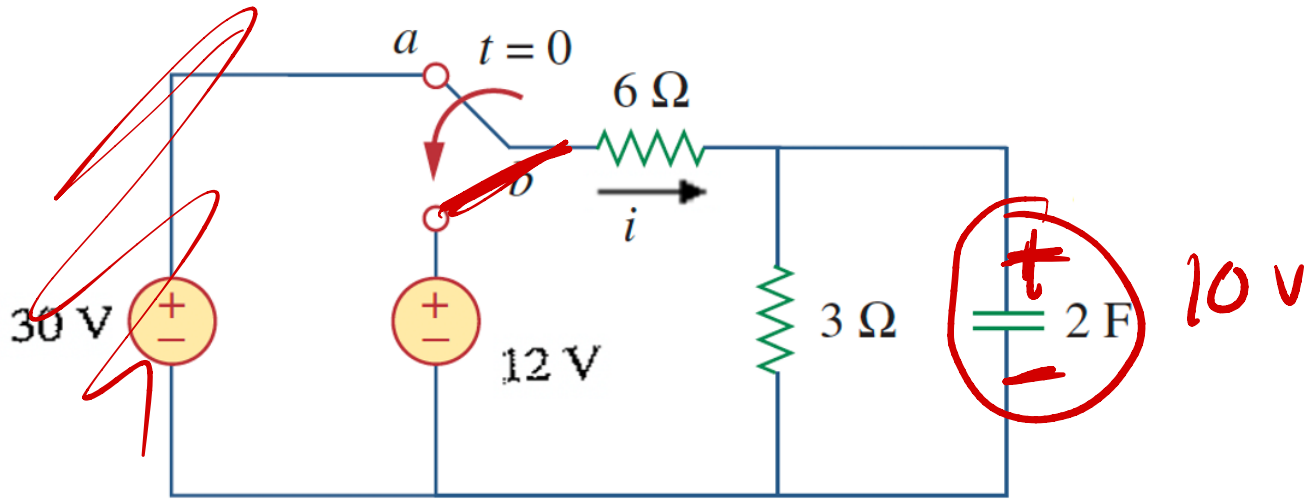

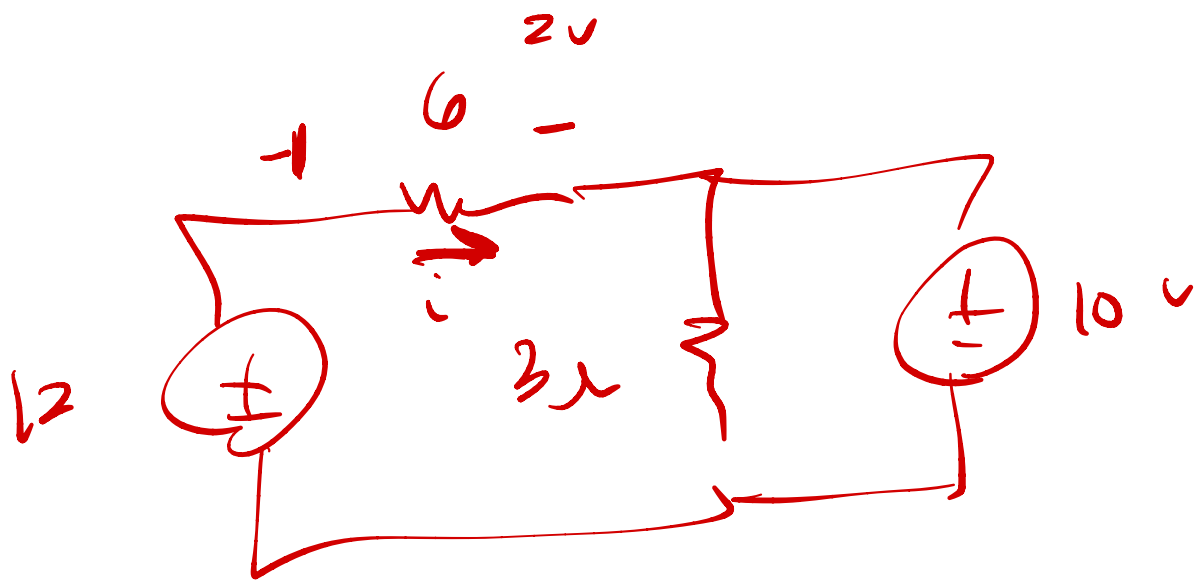

$i(0) = \frac{2}{6}$

$= \frac{1}{3} A$

Example: same circuit, different variable

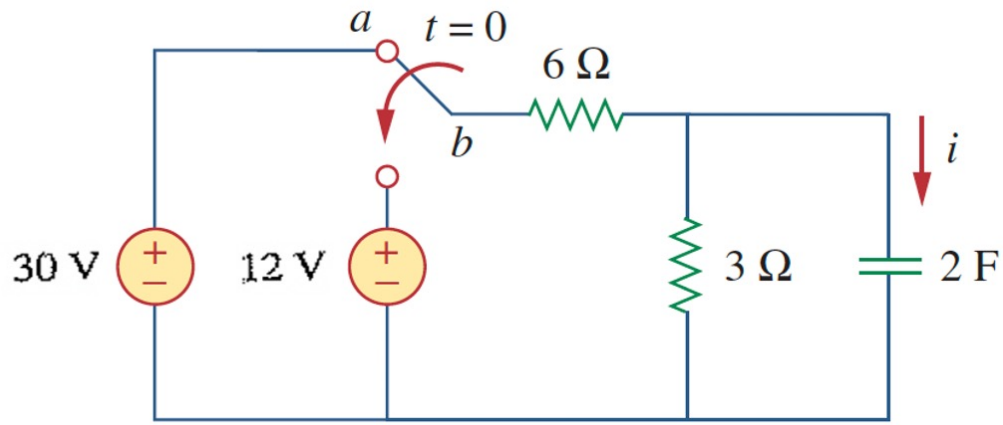

$$i(t) = \frac{4}{3} + \left(\frac{1}{3} - \frac{4}{3}\right) e^{-t/4} \quad A$$

$$\frac{4}{3} - e^{-t/4} \quad A$$

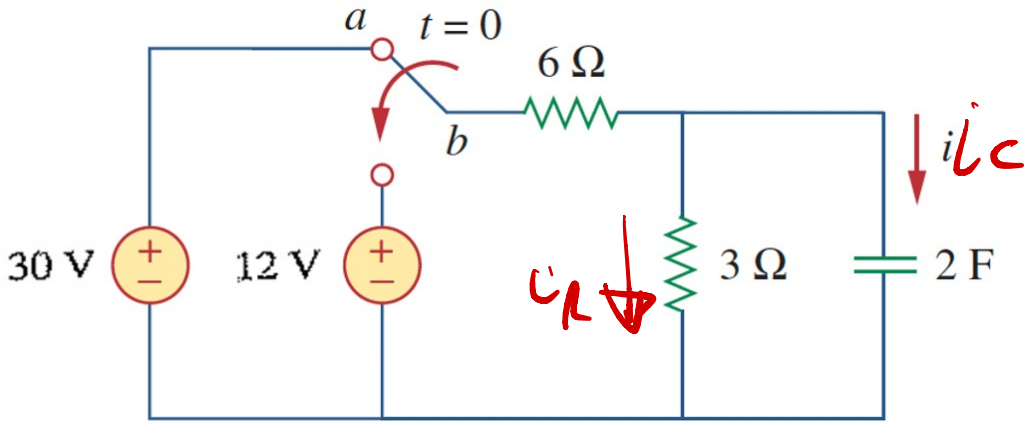

$R = 2\ \Omega$
$i(\infty) = 0\ A$
$v_C(0) = 10\ V$
$i(0) = -3\ A$

$$v_c(t) = 4 + 6e^{-t/4}\ V.\ t\ b$$

$$i_c(t) = C\frac{dv}{dt} = 2 \cdot 6\, e^{-t/2}\left(-\frac{1}{4}\right)$$

$$= -3e^{-t/4}$$

$$i_R = \frac{v_c(t)}{3} = \frac{4}{3} + 2e^{-t/4}$$

$$\frac{4}{3} - e^{-t/4}\ A$$

$v_o(t) = 10\, i_L(t) \quad t > 0$

$R = 16.7\ \Omega$
$v(\infty) = 4\ V$
$i_L(0) = 3.2A$
$v(0) = -32\ V$

Practice problem: find $v_o(t)$

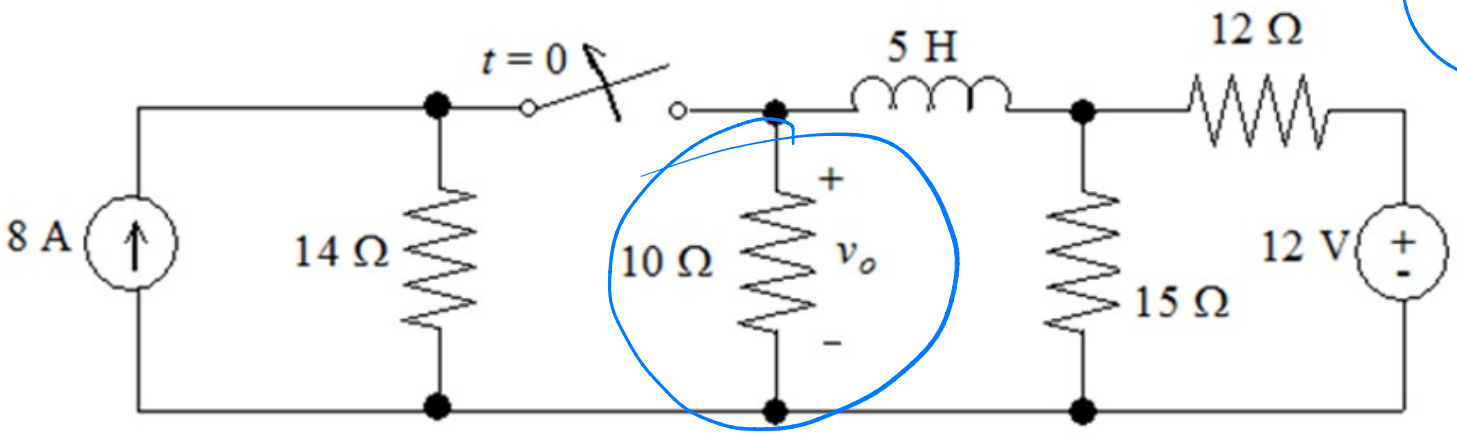

$\tau =$

$R_{TH} =$

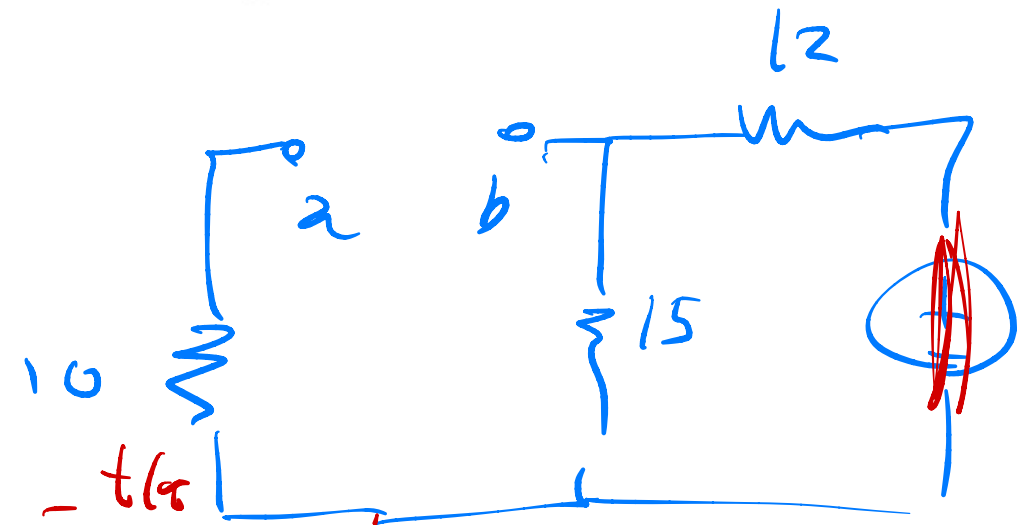

$v(t) = v_\infty + (v_0 - v_\infty) e^{-t/\tau}$ volts

$t > 0$

$R = 16.7\ \Omega$
$v(\infty) = 4\ V$
$i_L(0) = 3.2A$
$v(0) = -32\ V$

Practice problem: find $v_o(t)$

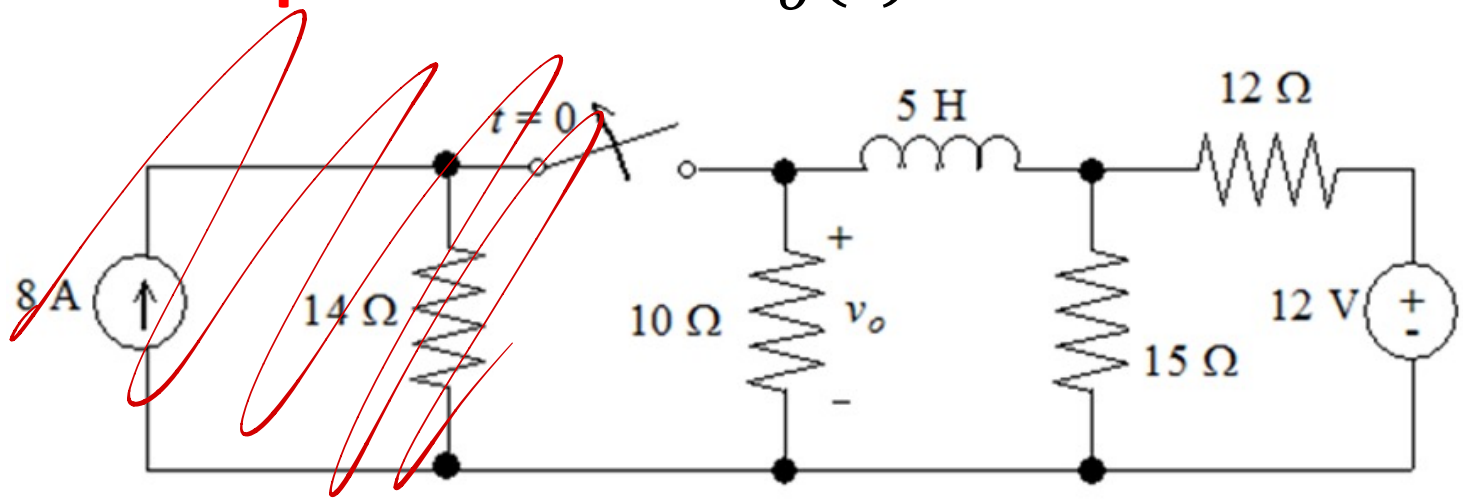

$v_\infty = 4\ V$

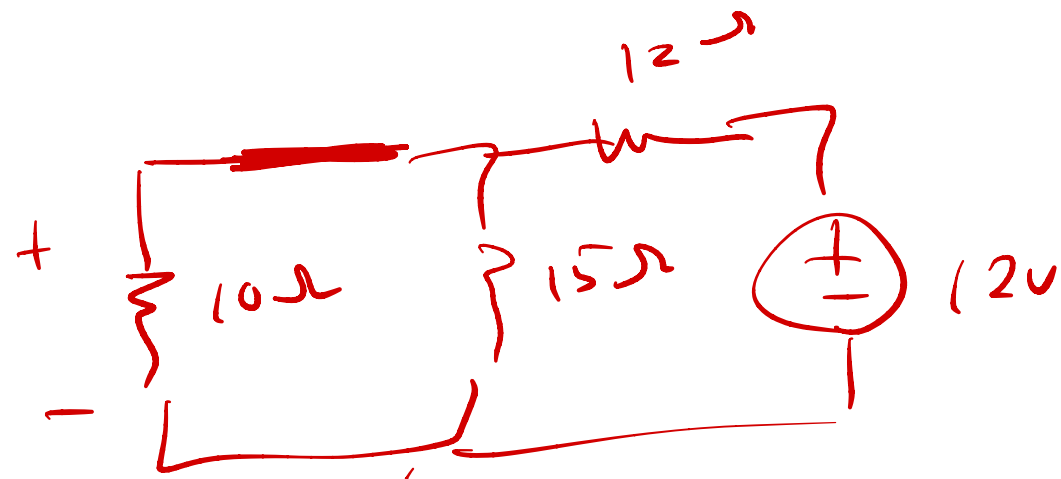

$v(t) = 4 + (v_0 - 4)e^{-t/\tau}$

$R = 16.7\ \Omega$
$v(\infty) = 4\ V$
$i_L(0) = 3.2A$
$v(0) = -32\ V$

Practice problem: find $v_o(t)$

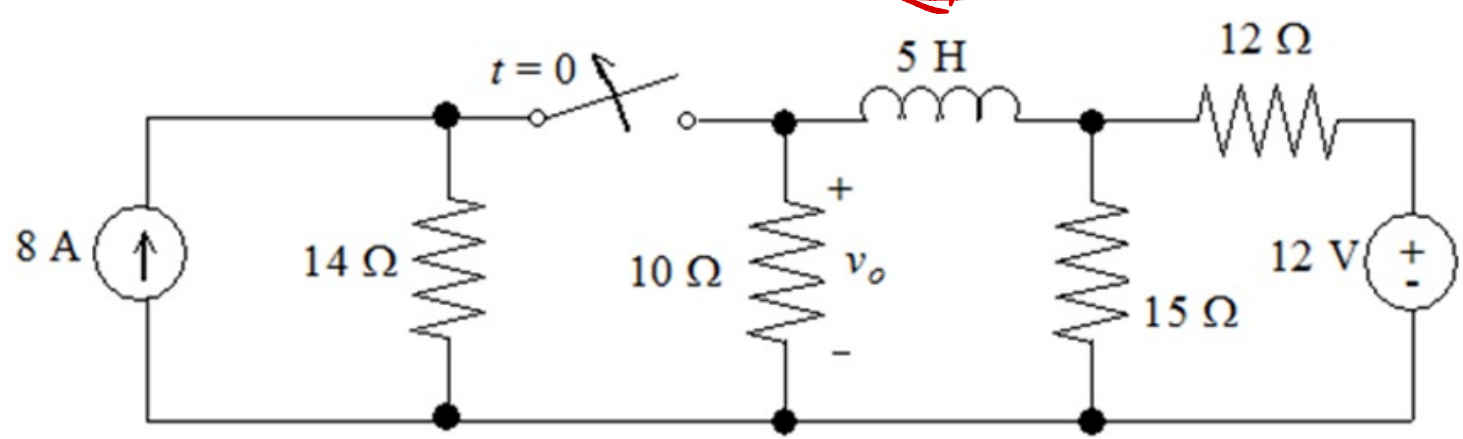

v_o $i_L(0)$ before $t=0$

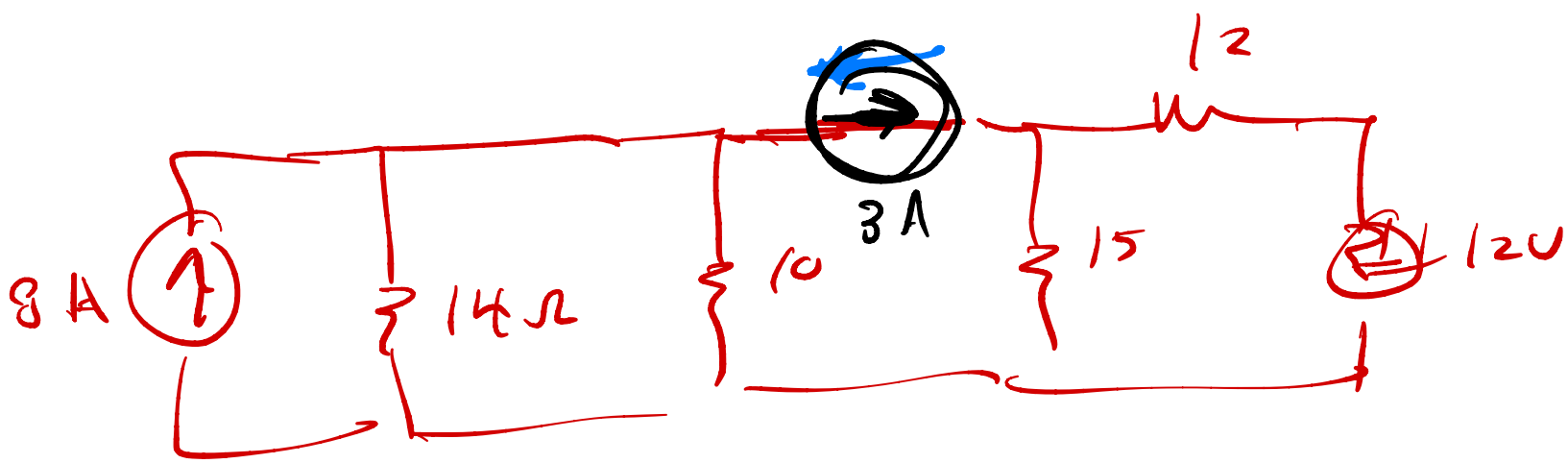

Practice problem: find $v_o(t)$

$R = 16.7\ \Omega$
$v(\infty) = 4\ V$
$i_L(0) = 3.2A$
$v(0) = -32\ V$

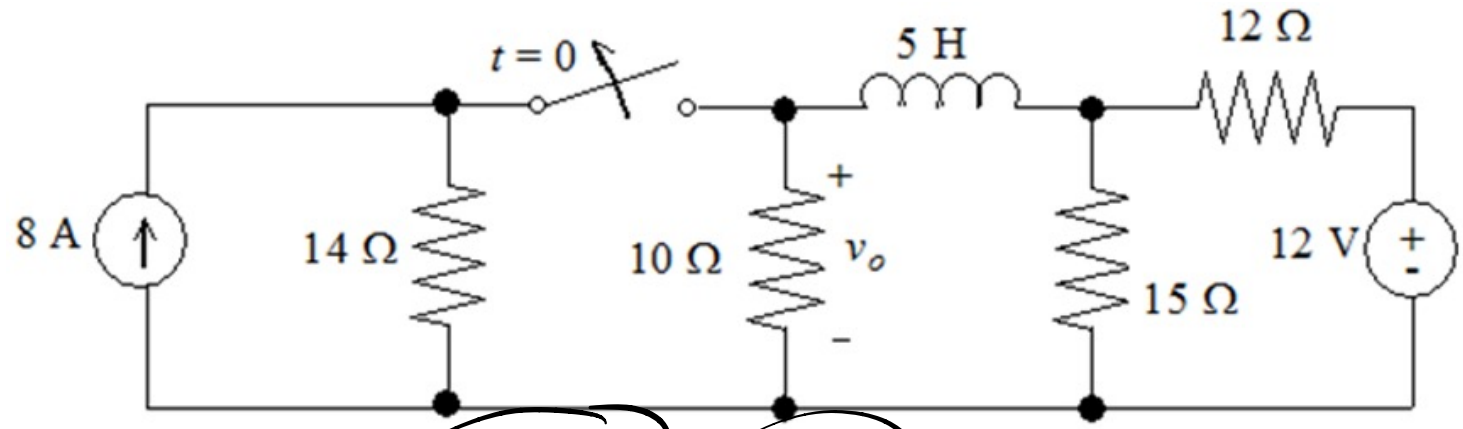

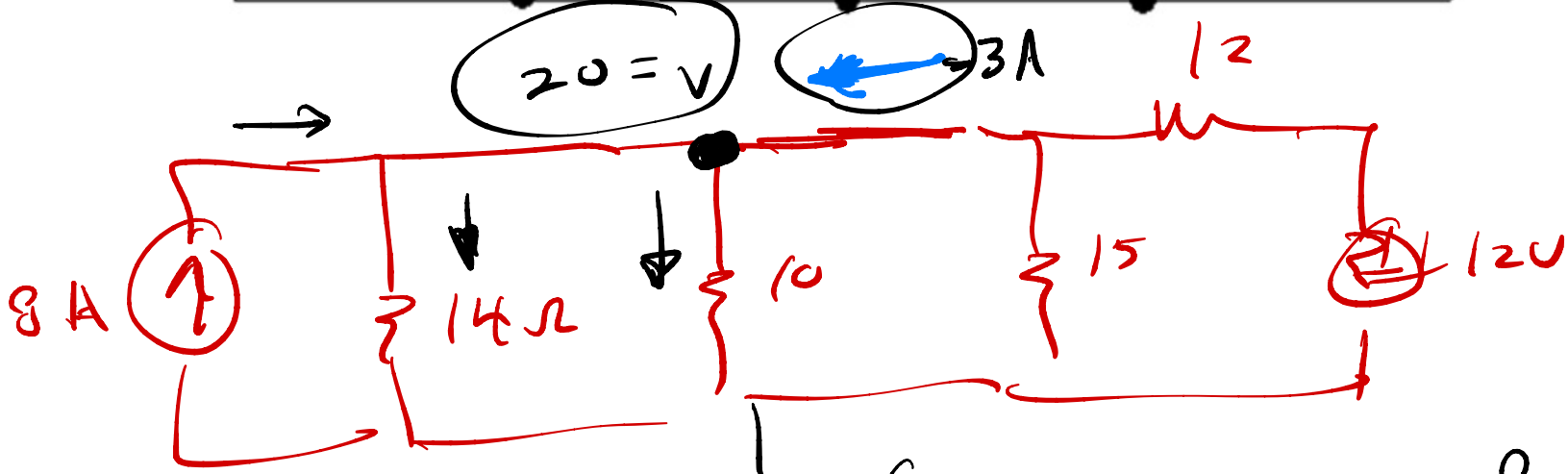

$$\frac{V}{14} + \frac{V}{10} + \frac{V}{15} + \frac{V-12}{12} - 8 = 0$$

$$9 = V\left(\frac{1}{14} + \frac{1}{10} + \frac{1}{15} + \frac{1}{12}\right)$$

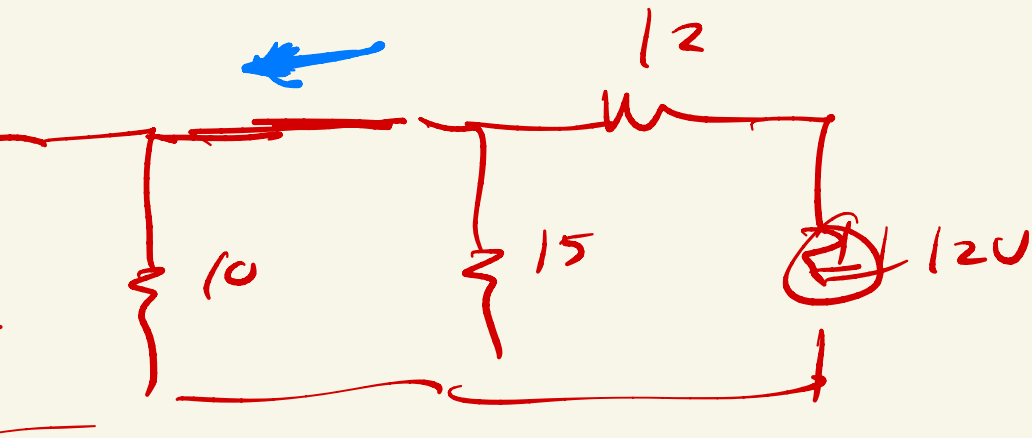
12
10
15
12V

$R = 16.7\ \Omega$
$v(\infty) = 4\ V$
$i_L(0) = 3.2A$
$v(0) = -32\ V$

Practice problem: find $v_o(t)$

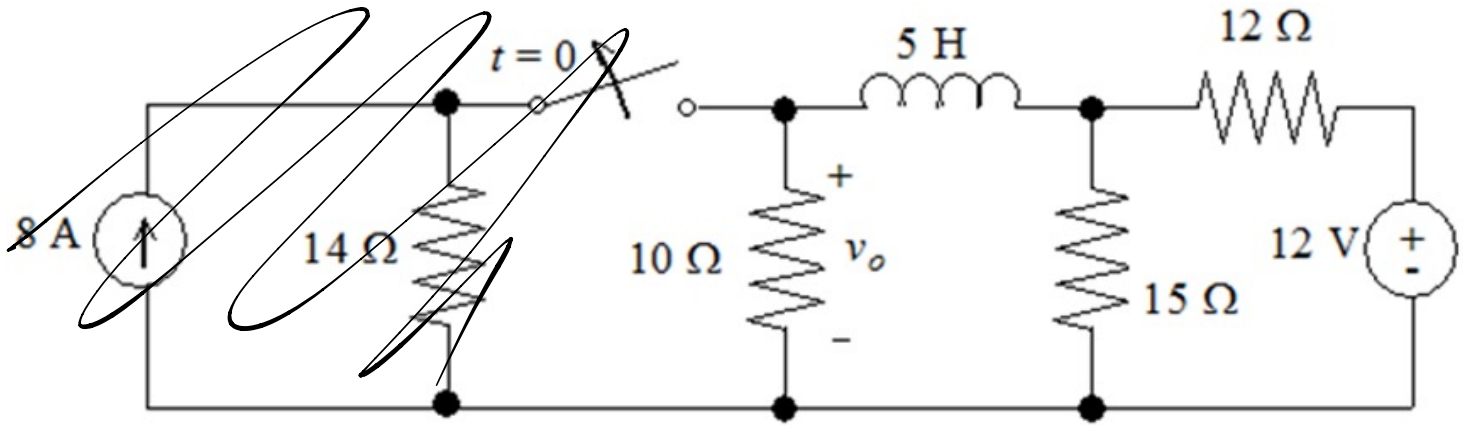

$t=0$

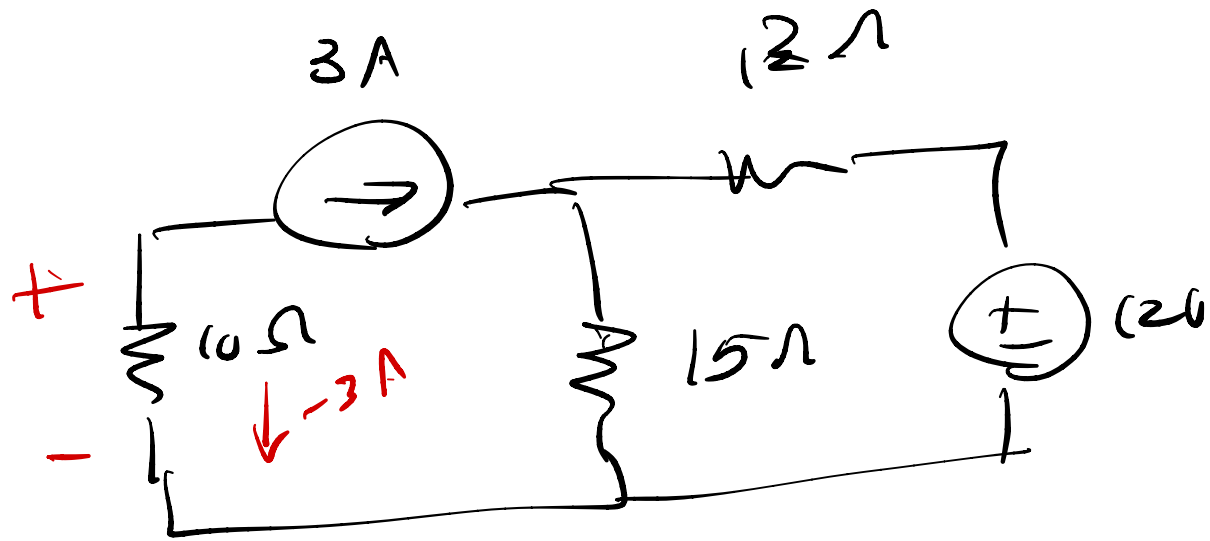

$v_o = -30V$

Practice problem: find $i_o(t)$

$R = 2\ k\Omega$
$i(\infty) = 0\ V$
$v_C(0) = 118.8\ V$
$i(0) = 39.6\ mA$

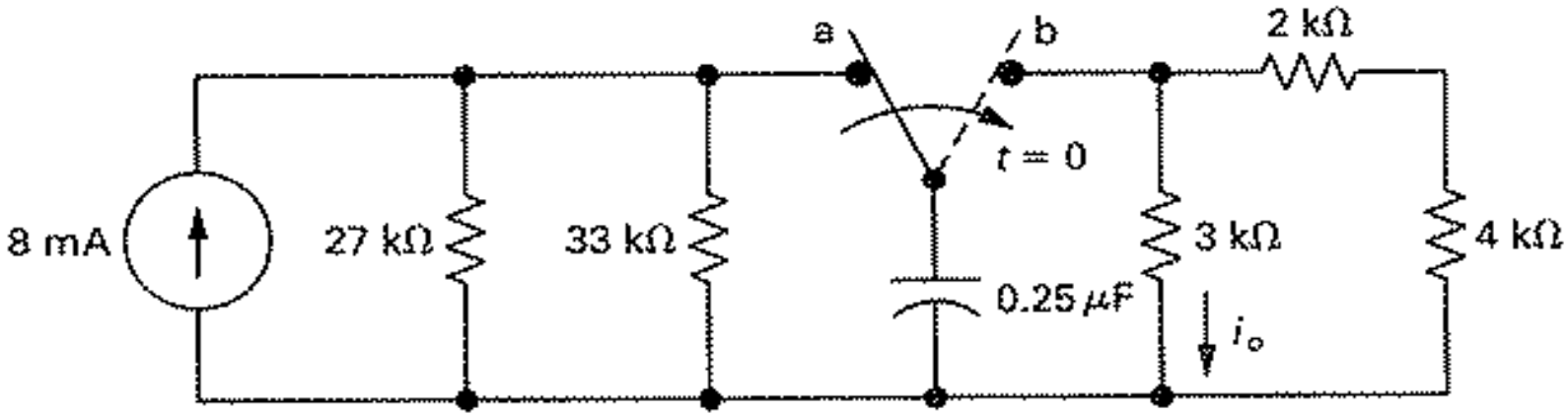

Practice problem: find $v_o(t)$

$R = 24\ \Omega$
$v(\infty) = 0\ V$
$i_L(0) = 2A$
$v(0) = -6\ V$

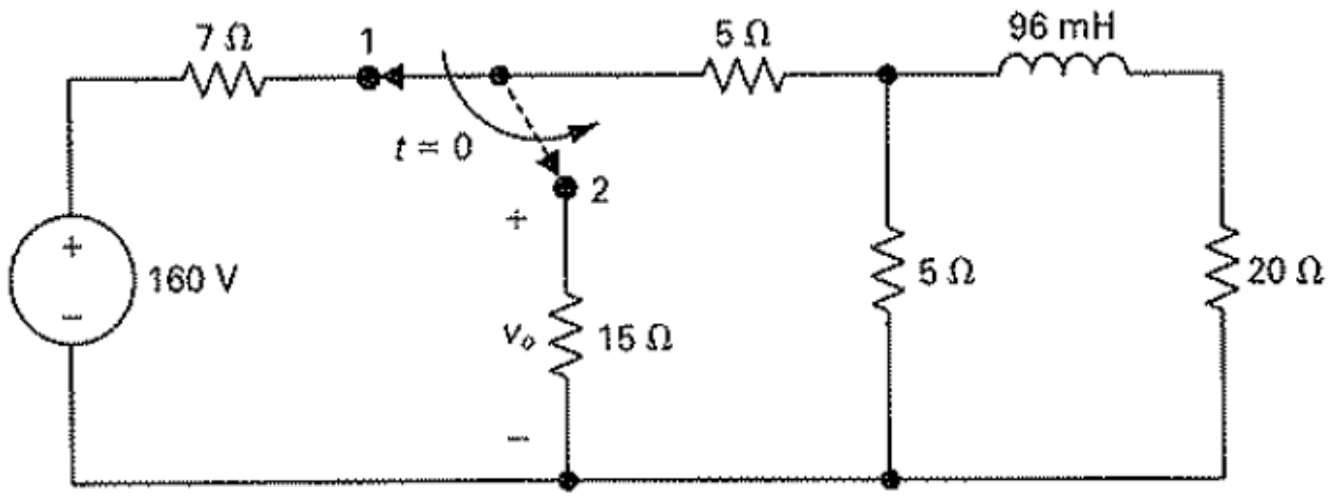

$-60e^{-80{,}000t}\ V$
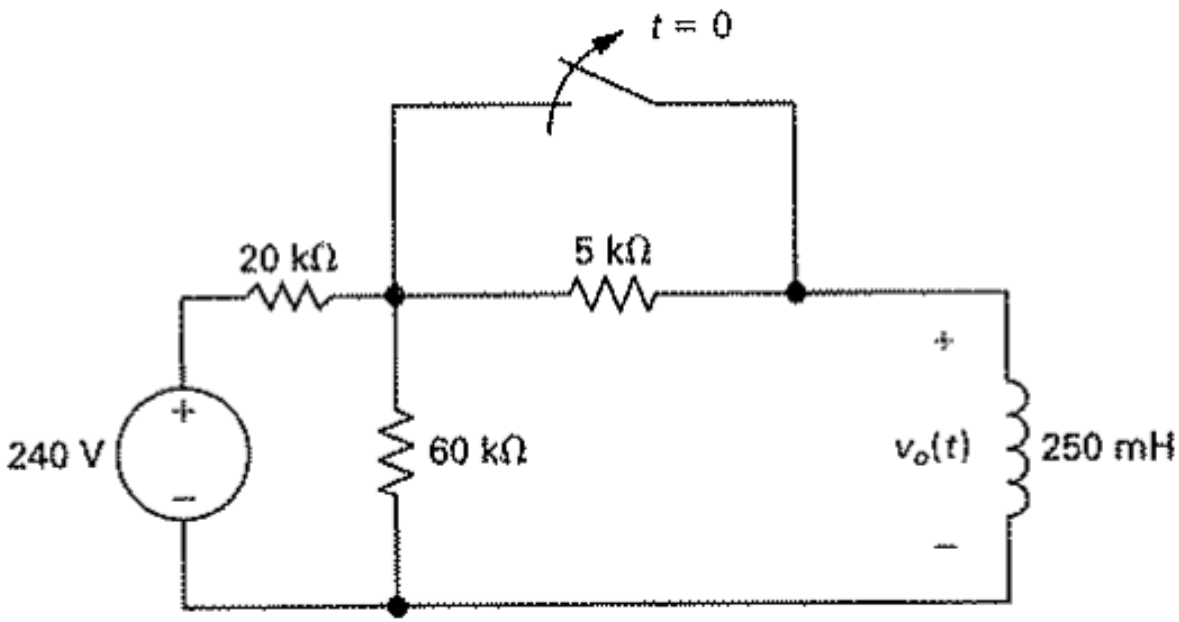
Practice problem: find $v_o(t)$